Small VRF system

for light commercial and home use

Refrigerant R410A INVERTER

DTV_J2E015E_05

AIRSTAGE™ J-II

Variable Refrigerant Flow System



DESIGN & TECHNICAL MANUAL



FUJITSU GENERAL LIMITED

CONTENTS

1. GENERAL INFORMATION

2. MODEL SELECTION

3. OUTDOOR UNITS

4. INDOOR UNITS

5. CONTROL SYSTEM

6. SYSTEM DESIGN

7. FUNCTION SETTING

8. EXTERNAL INPUT & OUTPUT

9. NOTES

10. OPTIONAL PARTS

Refrigerant R410A INVERTER

AIRSTAGE™
Variable Refrigerant Flow System

1. GENERAL INFORMATION

DTV_J2E015E_05--CHAPTER01
2013.04.01

CONTENTS

1. GENERAL INFORMATION

1. FEATURES OF SYSTEM ..... 01 - 01

1-1. HIGH ENERGY SAVING ..... 01 - 01

1-2. MORE COMFORT ..... 01 - 04

1-3. MORE CONVENIENCE ..... 01 - 05

1-4. MORE DESIGN FLEXIBILITY ..... 01 - 07

1-5. EASY INSTALLATION ..... 01 - 08

1-6. EASY MAINTENANCE ..... 01 - 09

2. MODEL LINE UP ..... 01 - 10

2-1. OUTDOOR UNIT ..... 01 - 10

2-2. INDOOR UNIT ..... 01 - 11

2-3. CONTROLLER ..... 01 - 13

2-4. ADAPTOR / CONVERTOR / MAINTENANCE TOOL ..... 01 - 14

2-5. BRANCH KIT ..... 01 - 15

2-6. EV KIT ..... 01 - 16

2-7. CASSETTE GRILLE ..... 01 - 16

2-8. OTHERS (optional parts) ..... 01 - 17

GENERAL INFORMATION

1. FEATURES OF SYSTEM

1-1. HIGH ENERGY SAVING

■ EFFICIENCY IN ACTUAL OPERATION

The building load is the range of almost 40 % to 80%. Therefore, most air conditioners do not operate at maximum load, but operate at low to medium loads. Especially, for multi system, operation performance at partial load is important because all the air conditioners do not always operate all the time. Aiming at energy saving performance matched to actual operation, Fujitsu General has developed a high intermediate performance air conditioner corresponding not only to the rated performance at 100% load, but also to low to medium load



Load curve (a typical office building)

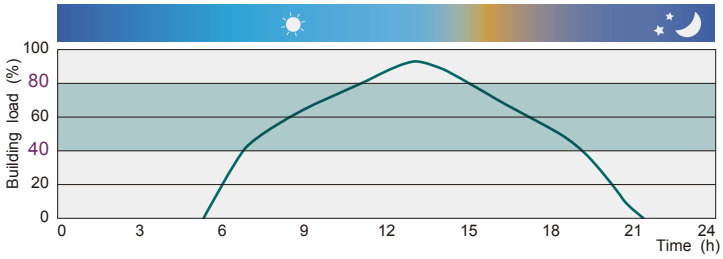



High EER / COP

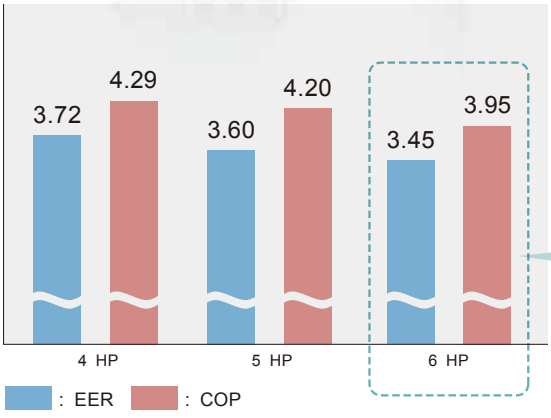

High part load performance (6HP class)

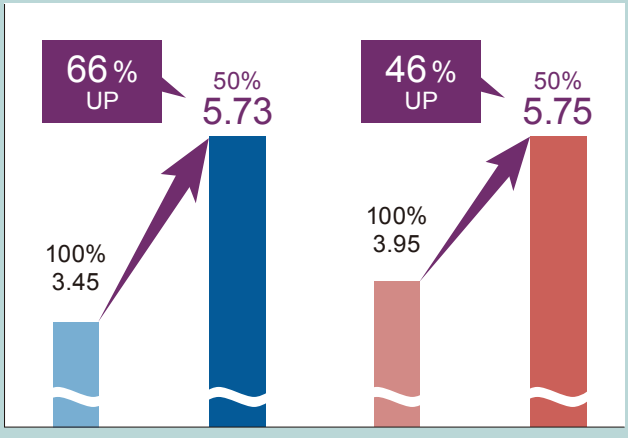

Conditions : Connected indoor units: AUXD30LALH+AUXD24LALH
Cooling : indoor temp. of 27°CDB/19°CWB. outdoor temp. of35°CDB/24°CWB
Heating : indoor temp. of 20°CDB/15°CWB, outdoor temp. of7°CDB/6°CWB

GENERAL INFORMATION

■ ADVANCED HIGH EFFICIENCY TECHNOLOGY



Large propeller fan

High performance and low noise realized by large propeller and optimization of angle.



DC fan motor

Miniaturized, low noise, high efficiency, multi-stage DC fan motor is mounted.

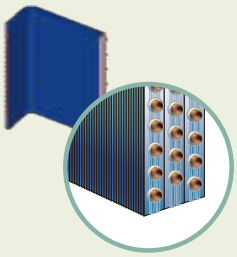

Large heat exchanger

Heat exchange performance is substantially improved by mounting of 3-row large heat exchanger.

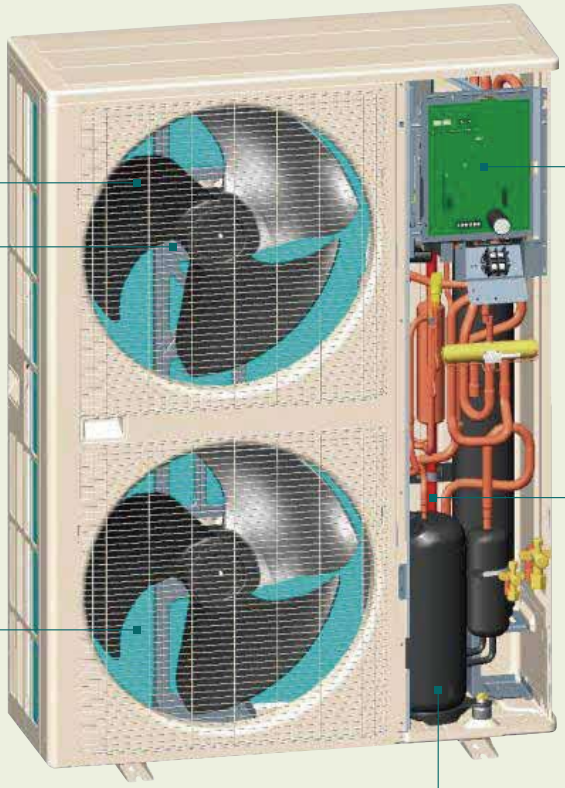



DC inverter control

Efficiency is improved by mounting of new active filter module.



Subcool heat exchanger

Cooling performance is improved by mounting of dual tube heat exchanger.

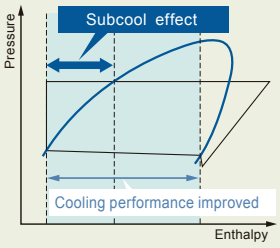

High efficiency compressor motor

Optimized refrigerant flow design

Highly accurate parts

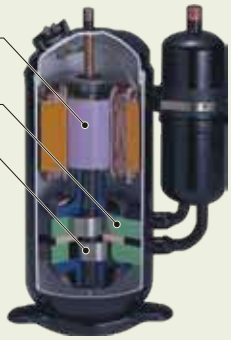

DC twin rotary compressor

Efficiency in all load regions is good. Especially good performance from low to medium at normal operation.

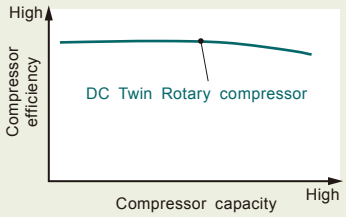

GENERAL INFORMATION

■ OPERATION PERFORMANCE IS EFFICIENTLY CONTROLLED

● Room temperature set point limitation

The minimum and maximum temperature range can be set.

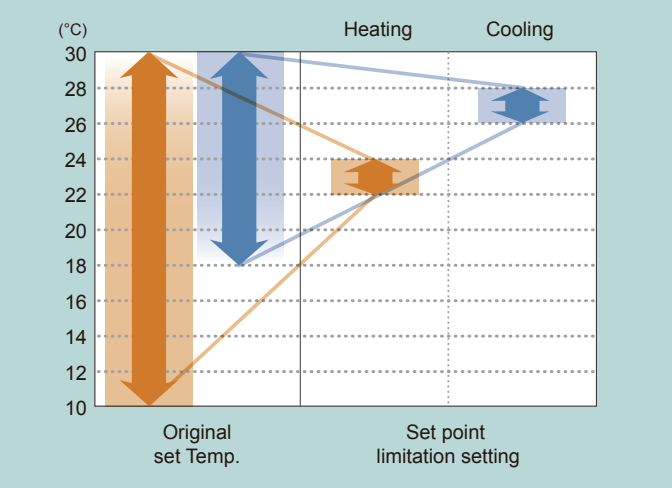



Central Remote Controller

● Economy operation

The temperature setting is offset automatically over a certain period of time.

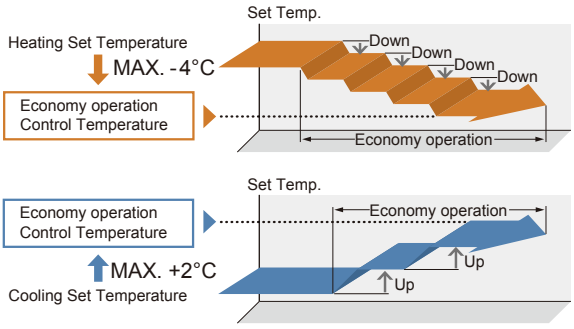

● Capacity save operation

The power consumption at peak is cut down.

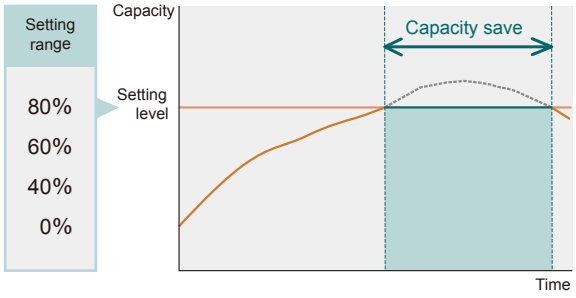

■ WASTEFUL OPERATION IS PREVENTED

● Auto Off function

This prevents waste of energy.

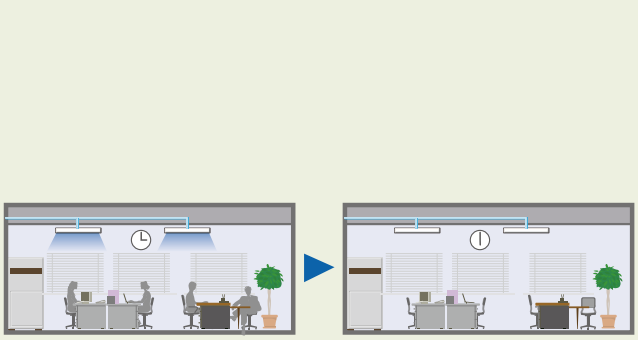

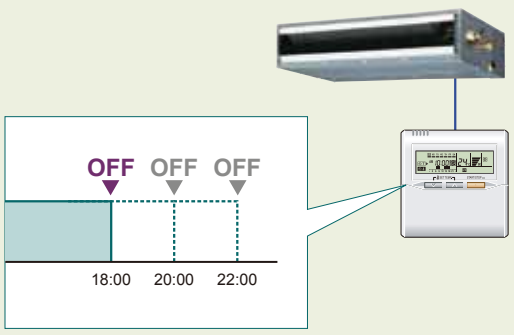

GENERAL INFORMATION

1-2. MORE COMFORT

■ POWERFUL HEATING

Heating capacity is improved at low outdoor temperature by our advanced technology.



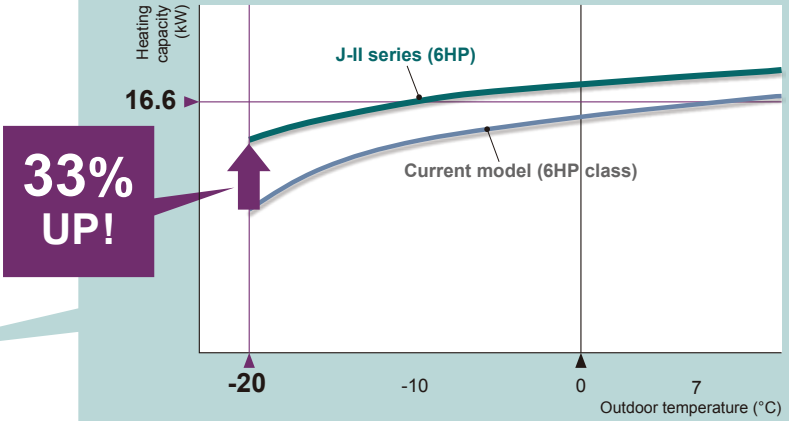

■ LOW NOISE DESIGN

● Low noise design of outdoor unit

Significantly reduced noise by optimized airflow structure design of outdoor unit.

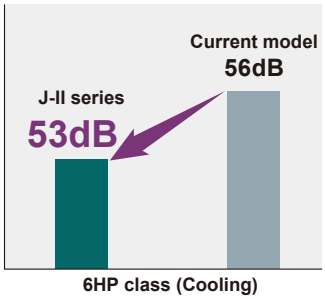

● Low noise mode

Outdoor unit can be switched to silent mode,depending on the installation environment.

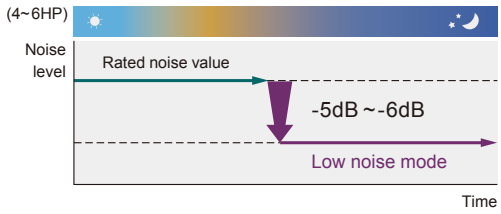

■ VARIOUS COMFORT CONTROL FUNCTION

● Easy auto changeover function

At the auto mode, cooling and heating mode is switched automatically to maintain the setting temperature.

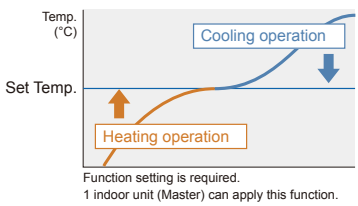

Function setting is required.
1 indoor unit (Master) can apply this function.

● Non-stop oil recovery operation

The product continues to operate without stopping the cooling or heating operation during oil recovery modes.

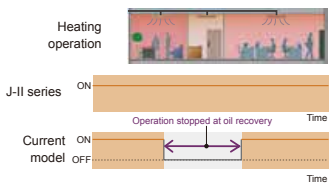

● Auto louver grill (Option for Slim Duct)

Auto louver grille provides comfort and efficient heating with louver controlled ductable outlet

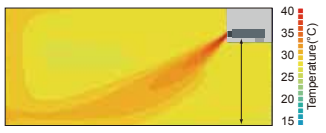

GENERAL INFORMATION

1-3. MORE CONVENIENCE

■ CENTRAL CONTROL OF SMALL OFFICE, SHOP, ETC.

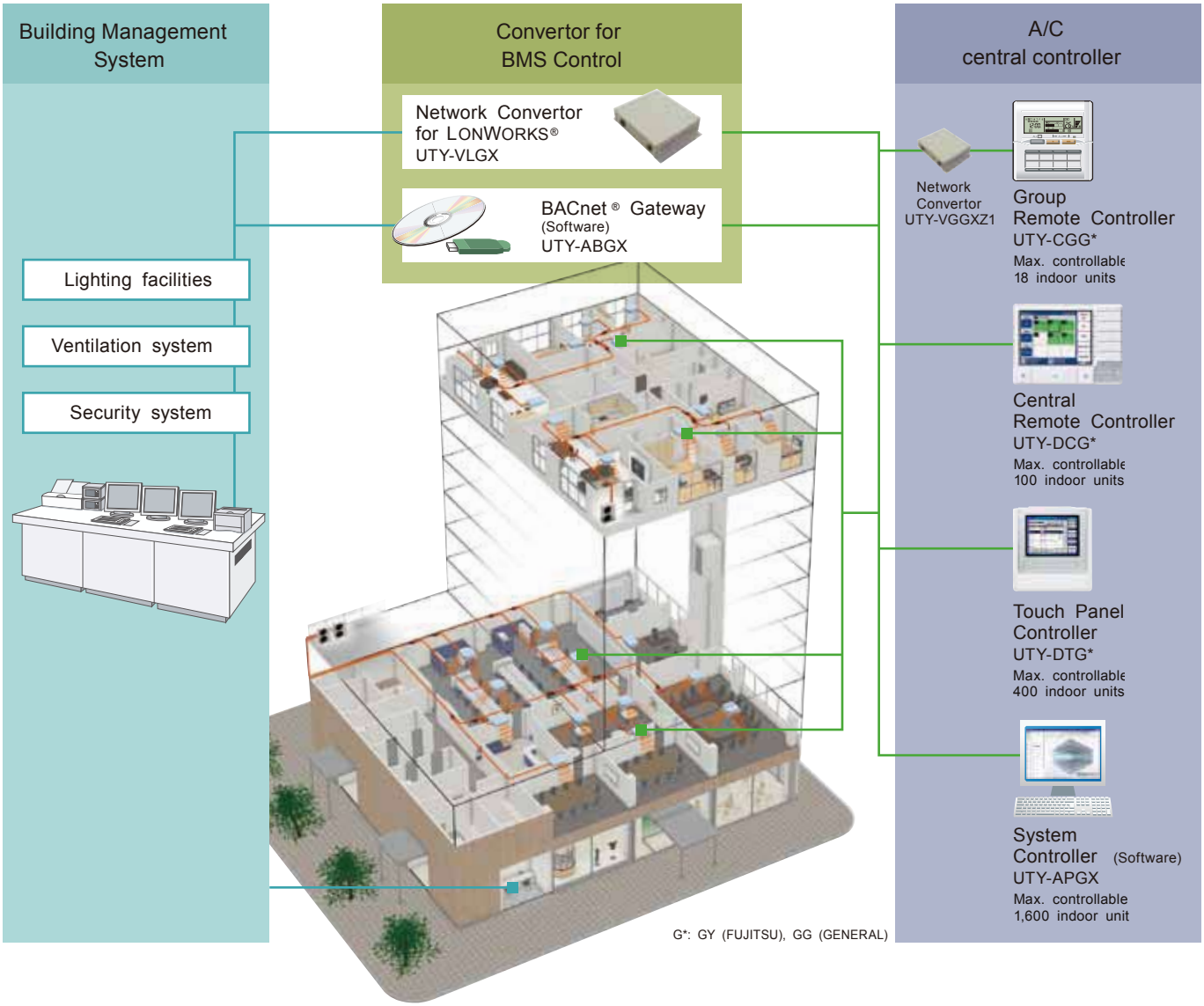

Control system composition example

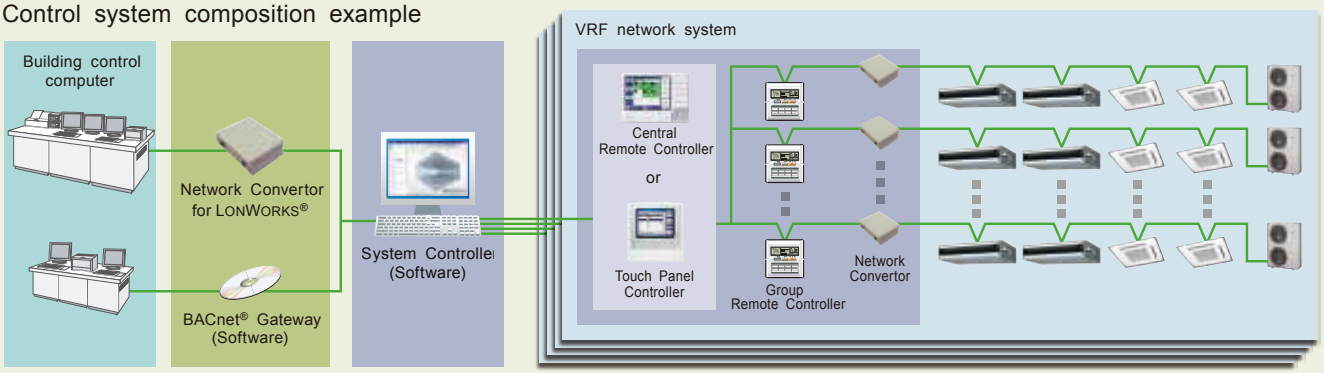

GENERAL INFORMATION

■ INDIVIDUAL AND CENTRAL CONTROL OF LARGE HOMES

Central Remote Controller
UTY-DCG*



- Automatic display of number of connected indoor unit
- Max. controllable 100 units

or

Group Remote Controller
UTY-CGG*

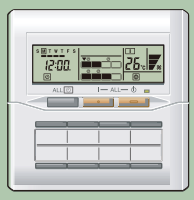

- Max. controllable 18 indoor units

Wireless Remote Controller
UTY-LNH*



Wired Remote Controller
UTY-RNK*





Simple Remote Controller



UTY-RSK*
With operation mode



UTY-RHK*
Without operation mode

Wired Remote Controller
UTY-RNR*



K*: KY (FUJITSU), KYT (FUJITSU), KG (GENERAL)
H*: HY (FUJITSU), HG (GENERAL)
G*: GY (FUJITSU), GG (GENERAL)
G*: RY (FUJITSU), RG (GENERAL)

Control system composition example

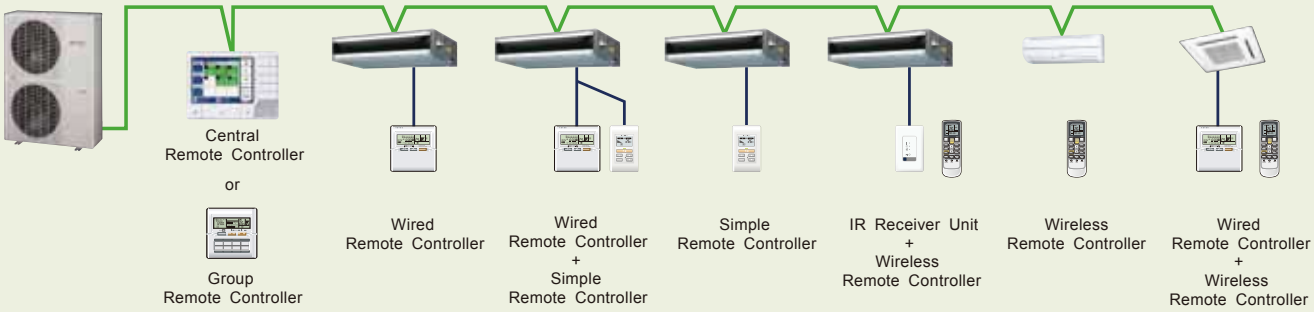

GENERAL INFORMATION

1-4. MORE DESIGN FLEXIBILITY

■ LONG PIPING LENGTH

Our advanced refrigerant control technology allows us to achieve a total refrigerant piping length of 180 m. This opens up new possibilities in system design.

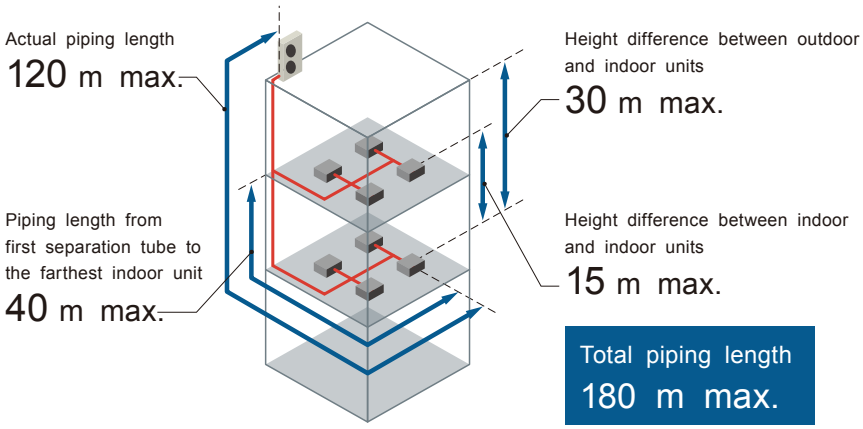



■ HIGH CAPACITY CONNECTION

Number of connectable indoor unit

4 HP	2 to 7 units
5HP	2 to 8 units
6 HP	2 to 9 units

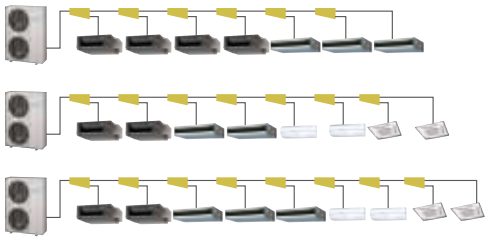

Indoor unit **52** models	Connectable indoor unit capacity range **130 % max.**

■ WIDE OPERATING RANGE

Installation in extreme temperature conditions is possible due to an increase in operational range.

Cooling : -5°C~46°C

Heating : -20°C~21°C

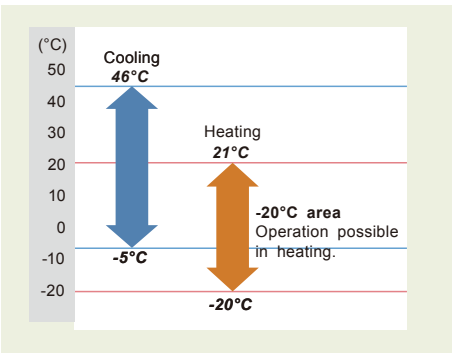



GENERAL INFORMATION

1-5. EASY INSTALLATION

■ EASIER INSTALLATION

● Easy piping connection

Improvement of the reliability by decreasing the flare connection.

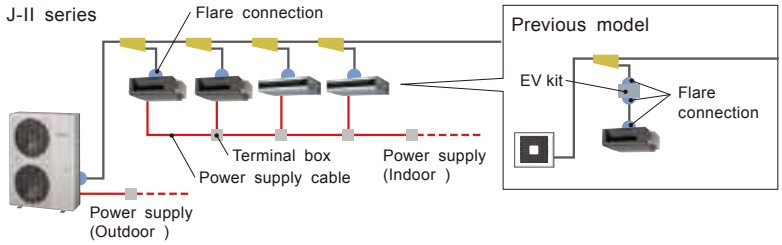

● Easy wiring connection

- Decreasing wiring mistakes by using non-polar 2 wires.(Remote controller cable is 3 wires)
- Improvement of wiring installation by common with V-II power supply method.

● Flexible installation of outdoor unit

Corresponds to the outdoor unit concentration installation.

Reduced installation intervals by front access

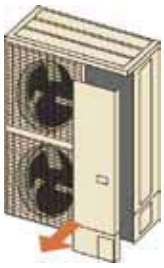



Flexible installation by 4 way pipe direction

■ CONVENIENT COMMISSIONING SUPPORT

● Automatic address setting function

The address of each indoor unit can be automatically set by button switch of outdoor unit.

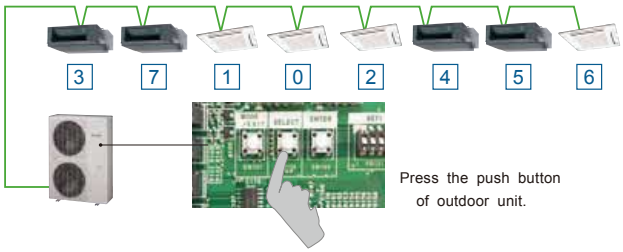

● Connection check function

Possible to confirm whether wiring connection and address setting are correct by check run function for a short time .

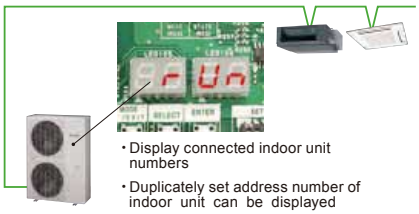

● Easy to connect with V-II communication system

It is possible to connect directly with the transmission cable of the V-II system without convertor.

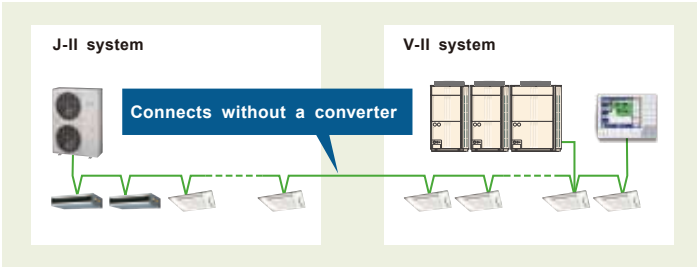

GENERAL INFORMATION

1-6. EASY MAINTENANCE

■ DESIGN FOR EASY MAINTENANCE

● Easy to read 7-segment LED

Confirm detail operational and trouble status without using specific equipment

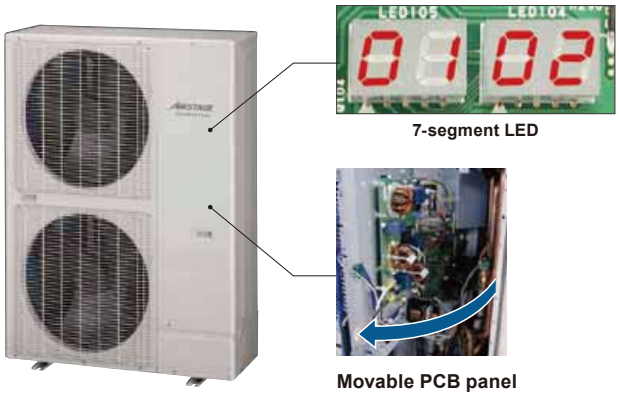

7-segment LED

Movable PCB panel

Easier for maintenance work behind the PCB

● Error status can be checked easily via the indoor unit wired controller

An error code is displayed on a liquid crystal screen.

Wired Remote Controller

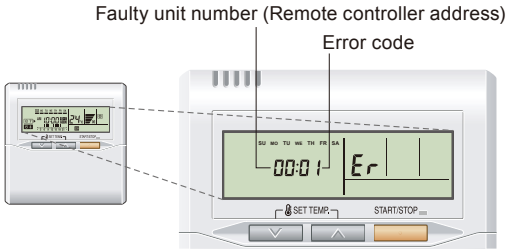

Simple Remote Controller

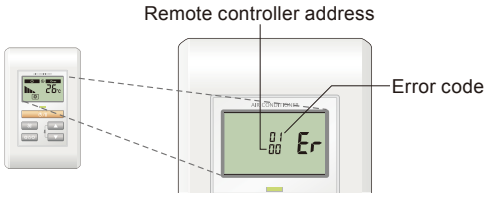

■ EMERGENCY STOP FUNCTION

Emergency alarm can be received by indoor, outdoor units, Central Remote Controller or Touch Panel Controller when they received it, all units will be stopped.

Note : In case of received Emergency alarm by Indoor / outdoor unit : All units connected within same refrigerant system will be stopped. Central Remote Controller or Touch Panel Controller : all units connected within VRF network system with Central Remote Controller or Touch Panel Controller will be stopped.

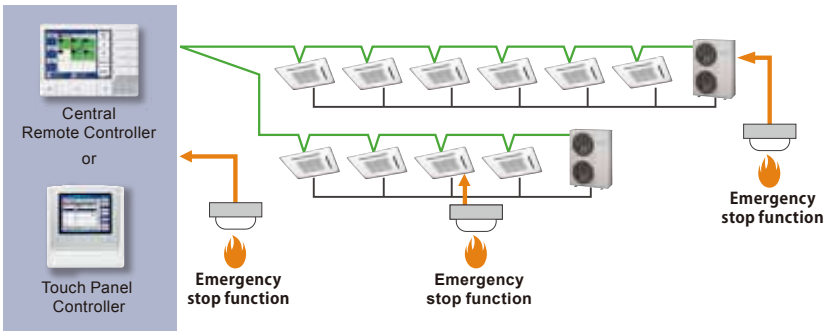

■ TROUBLE DIAGNOSIS BY SERVICE TOOL

Connection to Service Tool

- Detail operation status and recent error history can be checked and analyzed by using Service Tool.
- Last 5 min. operation memory can be also recorded.



Equipment Detail (Diagram)

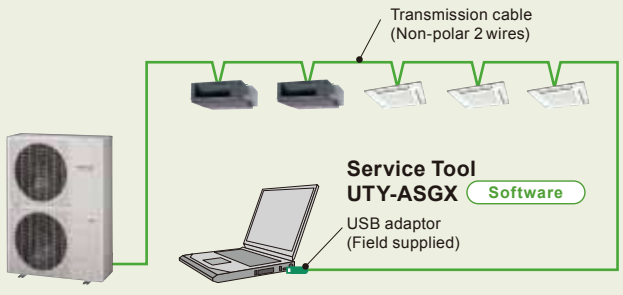

GENERAL INFORMATION

2. MODEL LINE UP

2-1. OUTDOOR UNIT

- Line up from 4HP to 6HP in 1HP increments.

■ LINE UP (SINGLE)

HP	Capacity (kW)	Model name	Chassis	Maximum connectable indoor unit
4	12.1	AJ∗A40LALH		7
5	14.0	AJ∗A45LALH		8
6	15.5	AJ∗A54LALH		9

■ MODEL DESIGNATION

1	2	3	4	5	6	7	8	9	10
A	J	Y	A	4	5	L	A	L	H

- 1, 2: Type — AJ : Outdoor unit
- 3: Destination — H: GENERAL; Y: FUJITSU
- 4, 5, 6: Model code (kW) — A40 : (12.1); A45 : (14.0); A54 : (15.5)
- 7: Function — L : Inverter (R410A)
- 8, 9: Model change code — AL
- 10: Series name — H : J-II

GENERAL INFORMATION

2-2. INDOOR UNIT

■ LINE UP (1/2)

Various combinations of types and capacity 52 models, ranging from 1.1kW to 14.0kW.

Capacity		Compact Cassette	Cassette	Low Static Pressure Duct/ Concealed Floor	Slim Duct/ Slim Concealed Floor	Medium Static Pressure Duct
kW	Model code					
1.1	04	●			●	
2.2	07	●		●	●	
2.8	09	●		●	●	
3.6	12	●		●	●	
4.5	14	●		●	●	
5.6	18	●	●	●	●	
7.1	24	●	●		●	●
9.0	30		●			●
11.2	36		●			●
12.5	45		●			●
14.0	54		●			

Compact Cassette	Cassette	Low Static Pressure Duct/ Concealed Floor
AUXB04GALH AUXB07GALH AUXB09GALH AUXB12GALH AUXB14GALH AUXB18GALH AUXB24GALH	AUXD18GALH AUXD24GALH AUXA30GALH AUXA36GALH AUXA45GALH AUXA54GALH	ARXB07GALH ARXB09GALH ARXB12GALH ARXB14GALH ARXB18GALH

Slim Duct/Slim Concealed Floor	Medium Static Pressure Duct
ARXD04GALH ARXD07GALH ARXD09GALH ARXD12GALH ARXD14GALH ARXD18GALH ARXD24GALH	ARXA24GBLH ARXA30GBLH ARXA36GBLH ARXA45GBLH

GENERAL INFORMATION

■ LINE UP (2/2)

Various combinations of types and capacity 52 models, ranging from 1.1kW to 14.0kW.

Capacity		High Static Pressure Duct	Floor / Ceiling	Ceiling	Wall Mounted (EEV external)	Wall Mounted
kW	Model code					
1.1	04				●	●
2.2	07				●	●
2.8	09				●	●
3.6	12		●		●	●
4.5	14		●		●	●
5.6	18		●			●
7.1	24		●			●
9.0	30			●		●
11.2	36	●		●		
12.5	45	●		●		
14.0	54			●		

High Static Pressure Duct	Floor / Ceiling	Ceiling
ARXC36GATH ARXC45GATH 	AB∗A12GATH AB∗A14GATH AB∗A18GATH AB∗A24GATH 	AB∗A30GATH AB∗A36GATH AB∗A45GATH AB∗A54GATH 

Wall Mounted	Wall Mounted (EEV external)
AS∗A04GACH AS∗A07GACH AS∗A09GACH AS∗A12GACH AS∗A14GACH AS∗A18GACH AS∗A24GACH AS∗A30GACH  	AS∗E04GACH AS∗E07GACH AS∗E09GACH AS∗E12GACH AS∗E14GACH  EV kit 

■ MODEL DESIGNATION

1	2	3	4	5	6	7	8	9	10
A	U	X	B	1	2	G	A	L	H

Type
AU: Cassette
AR: Duct
AB: Floor/Ceiling or Ceiling
AS: Wall Mounted

Destination
H: GENERAL
Y: FUJITSU
X:Neutral brand

Model
A: Standard
B: Compact (AU)
B: Low Static Pressure (AR)
C: High Static Pressure (AR)
D: Slim (AU) (AR)
E: EEV external (AS)

Model code (kW)
04 (1.1)
07 (2.2)
09 (2.8)
12 (3.6)
14 (4.5)
18 (5.6)
24 (7.1)
30 (9.0)
36 (11.2)
45 (12.5)
54 (14.0)

Function
G : Inverter (R410A)

Model change code
AC
AL
AT
BL

Series name
H : VRF II

GENERAL INFORMATION

2-3. CONTROLLER

■ LINE UP

Type	Model
System Controller	UTY-APGX
Touch Panel Controller	UTY-DTG∗
Central Remote Controller	UTY-DCG∗
Group Remote Controller	UTY-CGG∗
Wired Remote Controller (Touch panel)	UTY-RNR∗
Wired Remote Controller	UTY-RNK∗
Simple Remote Controller (With operation mode)	UTY-RSK∗
Simple Remote Controller (Without operation mode)	UTY-RHK∗
Wireless Remote Controller	UTY-LNH∗

■ CENTRAL CONTROL

System Controller	Touch Panel Controller	Central Remote Controller	Group Remote Controller
 UTY-APGX	 UTY-DTG∗	 UTY-DCG∗	 UTY-CGG∗ Network Convertor (UTY-VGGXZ1) is necessary to connect Group Remote Controller to VRF network system.

■ INDIVIDUAL CONTROL

Wired Remote Controller		Simple Remote Controller		Wireless Remote Controller
(Touch panel)		(With operation mode)	(Without operation mode)	
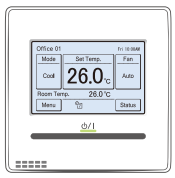 UTY-RNR∗	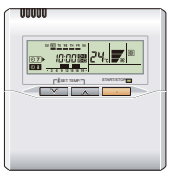 UTY-RNK∗	 UTY-RSK∗	 UTY-RHK∗	 UTY-LNH∗

■ MODEL DESIGNATION

1	2	3	4	5	6	7	8
U	T	Y	-	R	N	K	Y

Series name
UTY : Control unit

Type
APG: System Controller
DTG: Touch Panel Controller
DCG: Central Remote Controller
CGG: Group Remote Controller
RNR, RNK: Wired Remote Controller
RSK: Simple Remote Controller (with operation mode)
RHK: Simple Remote Controller (without operation mode)
LNH: Wireless Remote Controller

Destination
G: GENERAL
Y: FUJITSU
X:Neutral brand

GENERAL INFORMATION

2-4. ADAPTOR / CONVERTOR / MAINTENANCE TOOL

Network Convertor
Model : UTY-VGGXZ1



Split type systems can be controlled from a central controller via the convertor.

Group remote controller can be controlled up to 96 indoor units via the convertor.

Network Convertor for LonWorks®
Model : UTY-VLGX



For connection between VRF network system and a LonWorks® open network for management of small to medium-sized BMS.

BACnet® Gateway
Model : UTY-ABGX



The central control of maximum 1600 indoor units can be realized by connecting the VRF network system to the BACnet®, a global standard of the open network.

Signal Amplifier
Model : UTY-VSGXZ1



If the total length of transmission line exceeds 500m, or the number of units exceeds 64, Signal Amplifier will be necessary to use.

External Switch Controller
Model : UTY-TEKX



Air conditioner switching can be controlled by connecting other external sensor switches.

Service Tool
Model : UTY-ASGX



Extensive monitoring and analysis functions for installation and maintenance. Operation status and error history can be grasped promptly and adequately.

Web Monitoring Tool
Model : UTY-AMGX



Trouble free operation at all times by web monitoring system. The operation status of the VRF network system within the building can be monitored in real time over the Internet.

GENERAL INFORMATION

2-5. BRANCH KIT

Separation Tube	Model :UTR-BP090X

Liquid Pipe

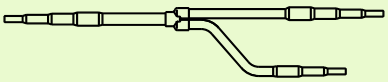

Gas Pipe

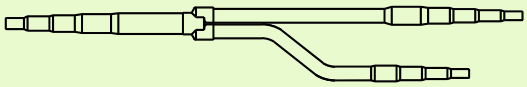

Separation Tube	Model :UTP-AX090A

Liquid Pipe

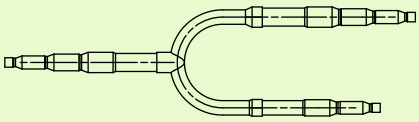

Gas Pipe

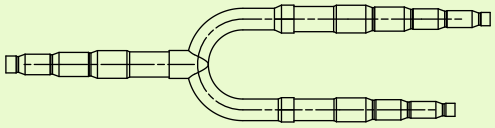

Header	
Model : UTR-H0906L	Model : UTR-H0908L

Liquid Pipe

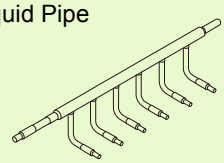

Gas Pipe

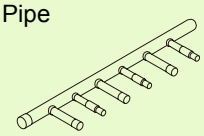

Liquid Pipe

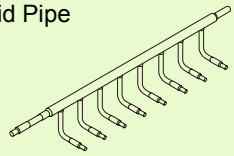

Gas Pipe

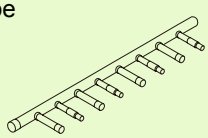

GENERAL INFORMATION

2-6. EV KIT

EV Kit	Models : UTR-EV09XB UTR-EV14XB



For Compact Wall Mounted type (EEV external type)

2-7. CASSETTE GRILLE

Cassette grille	Models : UTG-UFYC-W UTG-UFGC-W

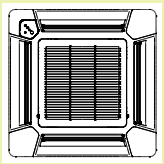

For Compact Cassette type

Cassette grille	Models : UTG-UGYA-W UTG-UGGA-W

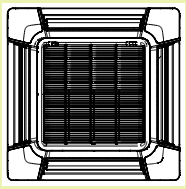

For Cassette type

GENERAL INFORMATION

2-8. OTHERS (optional parts)

Flange (Square)
Model : UTD-SF045T

For Low Static Pressure Duct / Duct type
205 x 1,063 ; L=40 (mm)

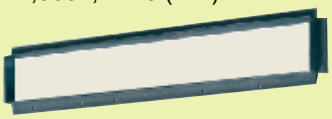

Flange (Round)
Model : UTD-RF204

For Low Static Pressure Duct / Duct type
ø195 (ø205) ; L=85 (mm)



Long-life Filter
Model : UTD-LF25NA

For Low Static Pressure Duct / Duct type

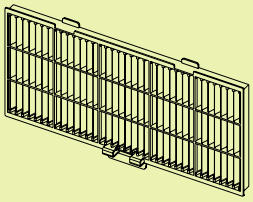

x 2 pcs

Long-life Filter
Model : UTD-LF60KA

For High Static Pressure Duct type

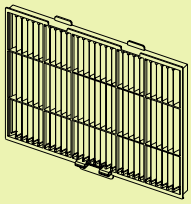

x 2 pcs

Drain Pump Unit
Models : UTZ-PX1BBA *1
UTZ-PX1NBA *2



*1 For Compact Duct type
*2 For Low Static Pressure Duct type / Duct type

Drain Pump Unit
Model : UTR-DPB24T



For Ceiling type

Air outlet shutter plate
Models : UTR-YDZB

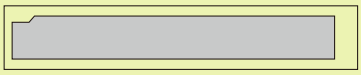

For Compact Cassette type

Air outlet shutter plate
Models : UTR-YDZC



For Cassette type

GENERAL INFORMATION

Panel spacer

Model : UTG-BGYA-W

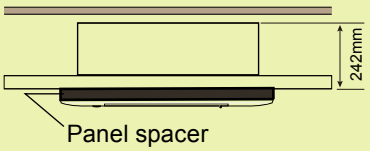

Wide panel

Model : UTG-AGYA-W

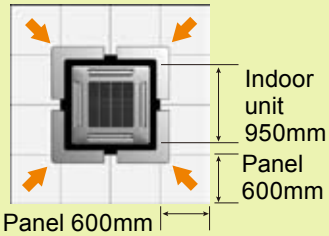

IR Receiver Unit

Models: UTB-YWC



For all Duct type

IR Receiver Unit

Models : UTY-LRHYB1
UTY-LRHGB1



For Cassette type

Remote Sensor Unit

Model : UTY-XSZX



Thermo-sensor for sensing the temperature of arbitrary place in the room

Fresh air intake kit

Model : UTZ-VXAA



For Compact Cassette type

Fresh air intake kit

Model : UTZ-VXGA



For Cassette type

Insulation Kit for High Humidity

Models : UTZ-KXGA *1
UTZ-KXGB *2
UTZ-KXGC *3

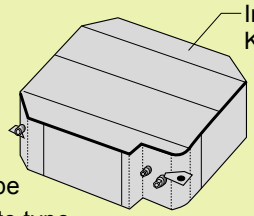

*1 For Cassette type
*2 For Slim Cassette type
*3 For Compact Cassette type

Auto louver grille kit

Models : UTD-GXSA-W *1
UTD-GXSB-W *2
UTD-GXSC-W *3

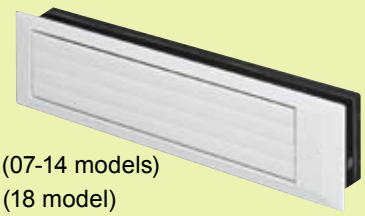

*1 For Slim Duct (07-14 models)
*2 For Slim Duct (18 model)
*3 For Slim Duct (24 model)

Refrigerant R410A INVERTER

AIRSTAGE™
Variable Refrigerant Flow System

2. MODEL SELECTION

CONTENTS

2. MODEL SELECTION

1. MODEL SELECTION PROCEDURE ..... 02 - 01

2. MODEL LINE UP ..... 02 - 02
2-1. OUTDOOR UNIT ..... 02 - 02
2-2. INDOOR UNIT ..... 02 - 03
2-3. OPTIONAL PARTS ..... 02 - 04

3. MODEL SELECTION AND CAPACITY CALCULATION ..... 02 - 06
3-1. SELECTION PROCEDURE OF INDOOR UNIT AND OUTDOOR UNIT .. 02 - 06
3-2. METHOD OF CAPACITY CALCULATION ..... 02 - 08
3-3. THE EXAMPLE OF CALCULATION ..... 02 - 09

4. CAPACITY TABLE COOLING (OUTDOOR UNIT) ..... 02 - 11

5. CAPACITY TABLE HEATING (OUTDOOR UNIT) ..... 02 - 17

6. CAPACITY COMPENSATION COEFFICIENT ..... 02 - 23

7. CAPACITY TABLE COOLING (INDOOR UNIT) ..... 02 - 24
7-1. COMPACT CASSETTE TYPE ..... 02 - 24
7-2. CASSETTE TYPE ..... 02 - 26
7-3. LOW STATIC PRESSURE DUCT/CONCEALED FLOOR TYPE ..... 02 - 28
7-4. SLIM DUCT/SLIM CONCEALED FLOOR TYPE ..... 02 - 30
7-5. MEDIUM STATIC PRESSURE DUCT TYPE ..... 02 - 32
7-6. HIGH STATIC PRESSURE DUCT TYPE ..... 02 - 33
7-7. FLOOR / CEILING TYPE ..... 02 - 34
7-8. CEILING TYPE ..... 02 - 35
7-9. WALL MOUNTED TYPE (EEV external model) ..... 02 - 36
7-10. WALL MOUNTED TYPE ..... 02 - 38

CONTENTS

2. MODEL SELECTION

8. CAPACITY TABLE HEATING (INDOOR UNIT) ..... 02 - 41
8-1. COMPACT CASSETTE TYPE ..... 02 - 41
8-2. CASSETTE TYPE ..... 02 - 43
8-3. LOW STATIC PRESSURE DUCT/CONCEALED FLOOR TYPE..... 02 - 45
8-4. SLIM DUCT/SLIM CONCEALED FLOOR TYPE ..... 02 - 47
8-5. MEDIUM STATIC PRESSURE DUCT TYPE..... 02 - 49
8-6. HIGH STATIC PRESSURE DUCT TYPE ..... 02 - 50
8-7. FLOOR / CEILING TYPE ..... 02 - 51
8-8. CEILING TYPE..... 02 - 52
8-9. WALL MOUNTED TYPE (EEV external model)..... 02 - 53
8-10. WALL MOUNTED TYPE ..... 02 - 55

1. MODEL SELECTION PROCEDURE

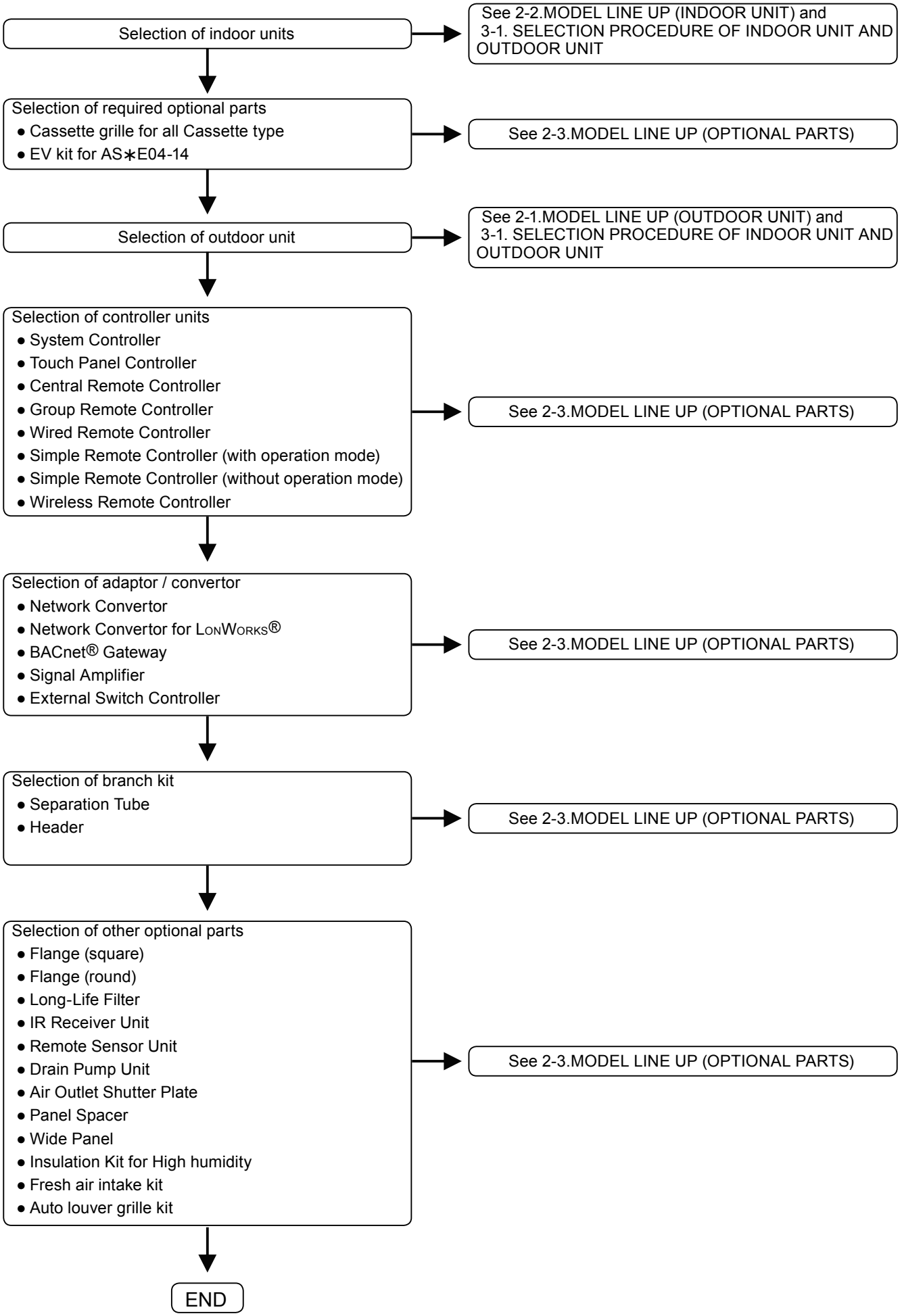

2. MODEL LINE UP

2-1. OUTDOOR UNIT

■ LINE UP

HP	Capacity (kW)		Model name	Maximum connectable indoor unit	Indoor unit connectable cooling capacity (kW) *1
	Cooling	Heating			
4	12.1	13.6	AJ∗A40LALH	7	5.6 to 15.7
5	14.0	16.0	AJ∗A45LALH	8	7.0 to 18.2
6	15.5	18.0	AJ∗A54LALH	9	7.8 to 20.1

∗1 : Calculate the cooling capacity of indoor unit with model code 04 (Ex. AUXB04) as "2.2 kW".

MODEL SELECTION

2-2. INDOOR UNIT

■ LINE UP

Type	Rated capacity (kW)		Model name	Dimensions H x W x D (mm)	Remarks
	Cooling	Heating			
Compact Cassette	1.1	1.3	AUXB04GALH	245 x 570 x 570	UTG-UFYC-W (FUJITSU) UTG-UFGC-W (GENERAL)
	2.2	2.8	AUXB07GALH		
	2.8	3.2	AUXB09GALH		
	3.6	4.1	AUXB12GALH		
	4.5	5.0	AUXB14GALH		
	5.6	6.3	AUXB18GALH		
	7.1	8.0	AUXB24GALH		
Cassette	5.6	6.3	AUXD18GALH	246 x 840 x 840	UTG-UGYA-W (FUJITSU) UTG-UGGA-W (GENERAL)
	7.1	8.0	AUXD24GALH		
	9.0	10.0	AUXA30GALH	288 x 840 x 840	
	11.2	12.5	AUXA36GALH		
	12.5	14.0	AUXA45GALH		
	14.0	16.0	AUXA54GALH		
Low Static Pressure Duct / Concealed Floor	2.2	2.8	ARXB07GALH	217 x 663 x 595	
	2.8	3.2	ARXB09GALH		
	3.6	4.0	ARXB12GALH	217 x 953 x 595	
	4.5	5.0	ARXB14GALH		
	5.6	6.3	ARXB18GALH		
Slim Duct / Slim Concealed Floor	1.1	1.3	ARXD04GALH	198 x 700 x 620	
	2.2	2.8	ARXD07GALH		
	2.8	3.2	ARXD09GALH		
	3.6	4.0	ARXD12GALH		
	4.5	5.0	ARXD14GALH		
	5.6	6.3	ARXD18GALH	198 x 900 x 620	
	7.1	8.0	ARXD24GALH	198 x 1100 x 620	
Medium Static Pressure Duct	7.1	8.0	ARXA24GBLH	270 x 1135 x 700	
	9.0	10.0	ARXA30GBLH		
	11.2	12.5	ARXA36GBLH		
	12.5	14.0	ARXA45GBLH		
High Static Pressure Duct	11.2	12.5	ARXC36GATH	400 x 1050 x 500	
	12.5	14.0	ARXC45GATH		
Floor / Ceiling	3.6	4.0	AB∗A12GATH	199 x 990 x 655	
	4.5	5.0	AB∗A14GATH		
	5.6	6.3	AB∗A18GATH		
	7.1	8.0	AB∗A24GATH		
Ceiling	9.0	10.0	AB∗A30GATH	240 x 1660 x 700	
	11.2	12.5	AB∗A36GATH		
	12.5	14.0	AB∗A45GATH		
	14.0	16.0	AB∗A54GATH		
Wall Mounted	1.1	1.3	AS∗A04GACH	275 x 790 x 215	
	2.2	2.8	AS∗A07GACH		
	2.8	3.2	AS∗A09GACH		
	3.6	4.1	AS∗A12GACH		
	4.5	5.0	AS∗A14GACH		
Wall Mounted (EEV external model)	1.1	1.3	AS∗E04GACH	275 x 790 x 215	UTR-EV09XB
	2.2	2.8	AS∗E07GACH		
	2.8	3.2	AS∗E09GACH		
	3.6	4.1	AS∗E12GACH		UTR-EV14XB
	4.5	5.0	AS∗E14GACH		
Wall Mounted	5.6	6.3	AS∗A18GACH	320 x 998 x 228	
	7.1	8.0	AS∗A24GACH		
	8.0	9.0	AS∗A30GACH		

2-3. OPTIONAL PARTS

■ CONTROLLER

Items	Model name	Remarks
System Controller	UTY-APGX	
Touch Panel Controller	UTY-DTG∗	
Central Remote Controller	UTY-DCG∗	
Group Remote Controller	UTY-CGG∗	
Wired Remote Controller (Touch panel)	UTY-RNR∗	
Wired Remote Controller	UTY-RNK∗	
Simple Remote Controller (With operation mode)	UTY-RSK∗	
Simple Remote Controller (Without operation mode)	UTY-RHK∗	
Wireless Remote Controller	UTY-LNH∗	

■ ADAPTOR / CONVERTOR / MAINTENANCE TOOL

Items	Model name	Remarks
Network Convertor	UTY-VGGXZ1	
Network Convertor for LonWorks®	UTY-VLGX	
Signal Amplifier	UTY-VSGXZ1	
External Switch Controller	UTY-TEKX	
Service Tool	UTY-ASGX	
Web Monitoring Tool	UTY-AMGX	
BACnet® Gateway	UTY-ABGX	

■ BRANCH KIT

Items	Model name	Total cooling capacity of indoor units (kW) *1 *2
Separation Tube	UTR-BP090X UTP-AX090A	28.0 or less
Header	UTR-H0906L	28.0 or less
	UTR-H0908L	28.0 or less

■ EV KIT

Items	Model name	Applicable indoor unit
EV Kit	UTR-EV09XB	AS∗E04GACH, AS∗E07GACH, AS∗E09GACH
	UTR-EV14XB	AS∗E12GACH, AS∗E14GACH

■ CASSETTE GRILLE

Items	Model name	Remarks
Cassette grille	UTG-UF∗C-W	For Compact Cassette type
	UTG-UG∗A-W	For Cassette type

∗1 : Total cooling capacity of indoor units means the total value of indoor unit cooling capacity connected downstream.

∗2 : Calculate the cooling capacity of indoor unit with model code 04 (Ex. AUXB04) as "2.2 kW".

MODEL SELECTION

■ OTHERS

Items	Model name	Remarks
Flange (Square)	UTD-SF045T	For Low Static Pressure Duct / Duct type
Flange (Round)	UTD-RF204	For Low Static Pressure Duct / Duct type
Long-Life Filter	UTD-LF25NA	For Low Static Pressure Duct / Duct type
	UTD-LF60KA	For High Static Pressure Duct type
Drain Pump Unit	UTZ-PX1BBA	For Compact Duct type
	UTZ-PX1NBA	For Low Static Pressure Duct / Duct type
	UTR-DPB24T	For Ceiling type
Air Outlet Shutter Plate	UTR-YDZB	For Compact Cassette type
	UTR-YDZC	For Cassette type
Panel Spacer	UTG-BGYA-W	For Cassette type
Wide Panel	UTG-AGYA-W	For Cassette type
IR Receiver Unit	UTB-∗WC	For all Duct type
	UTY-LRH∗B1	For Cassette type
Remote Sensor Unit	UTY-XSZX	For all Duct type
Insulation Kit for High Humidity	UTZ-KXGA	For Cassette type
	UTZ-KXGB	For Slim Cassette type
	UTZ-KXGC	For Compact Cassette type
Fresh air intake kit	UTZ-VXAA	For Compact Cassette type
	UTZ-VXGA	For Cassette type
Auto louver grille kit	UTD-GXSA-W	For Slim Duct type (04-14 models)
	UTD-GXSB-W	For Slim Duct type (18 model)
	UTD-GXSC-W	For Slim Duct type (24 model)

3. MODEL SELECTION AND CAPACITY CALCULATION

3-1. SELECTION PROCEDURE OF INDOOR UNIT AND OUTDOOR UNIT

Please select indoor units and outdoor unit and make the capacity of each indoor unit be larger than cooling and heating load.

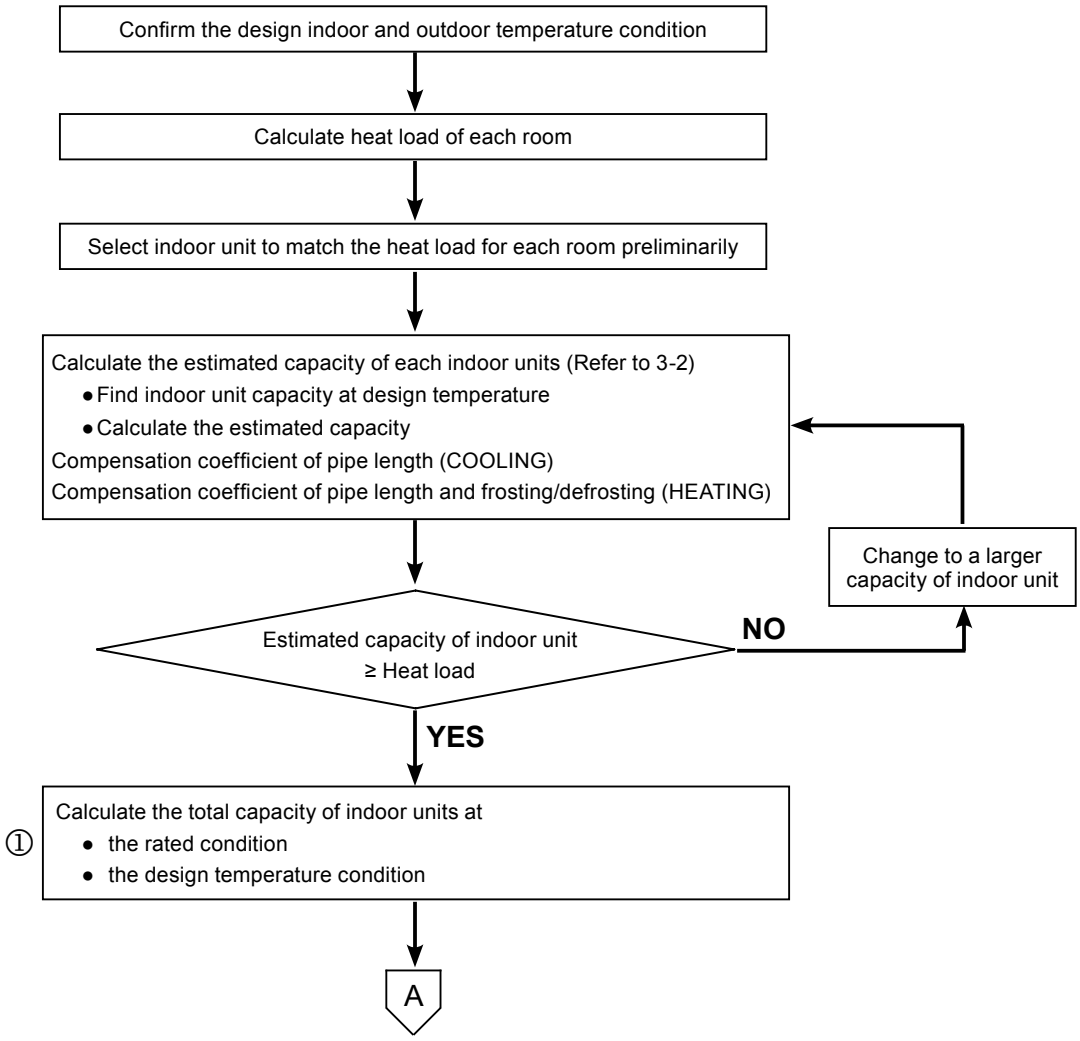

MODEL SELECTION

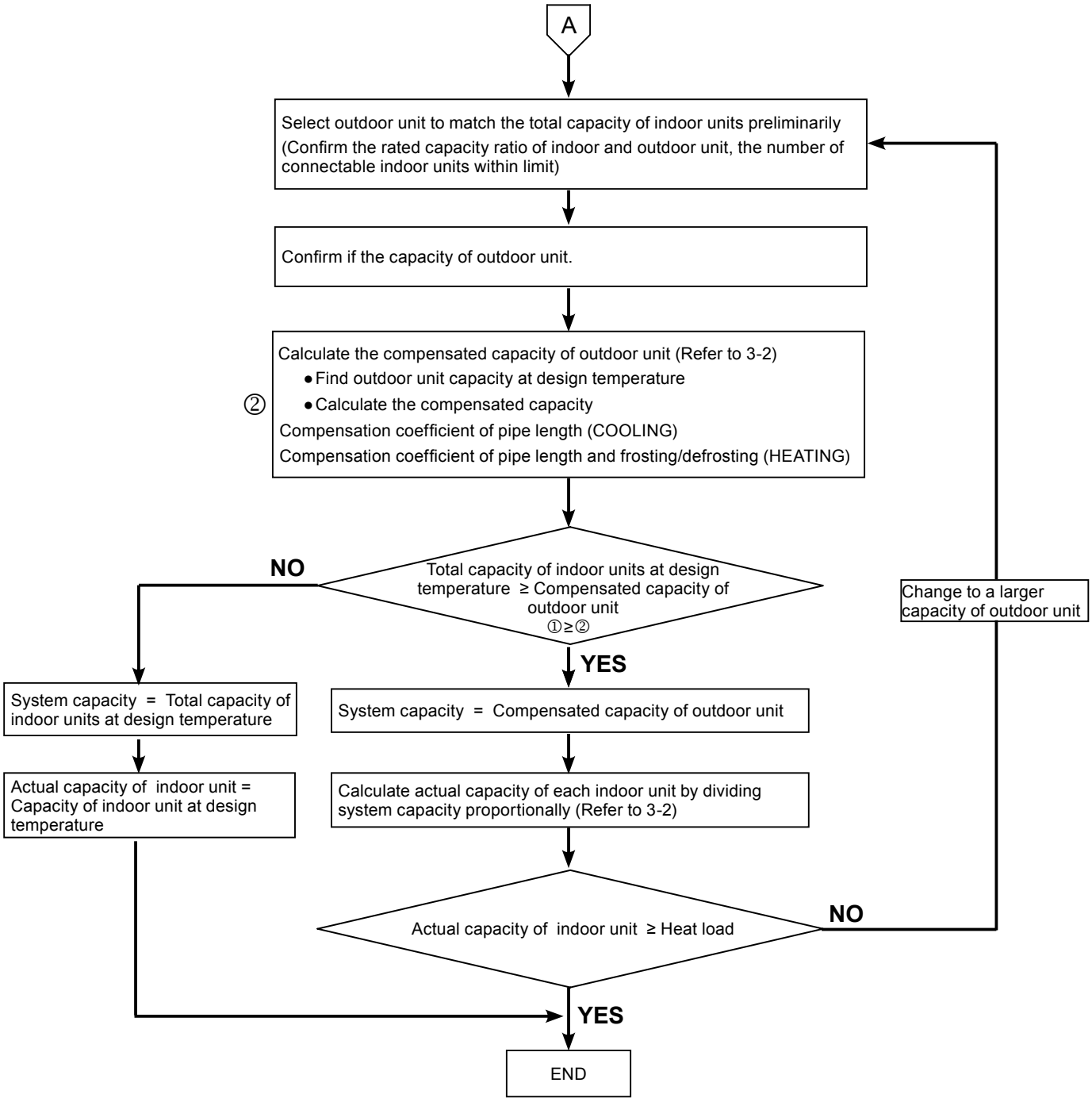

MODEL SELECTION

3-2. METHOD OF CAPACITY CALCULATION

The capacity calculation method which takes the effects of air temperature, pipe length and frosting/defrosting into consideration is shown below.

1. Calculate the estimated capacity of each indoor unit.

(1) Find **capacity of indoor unit at rated condition (TCin)r and at design temperature (TCin)d**
[from 7. CAPACITY TABLE COOLING (INDOOR UNIT) or 8. CAPACITY TABLE HEATING (INDOOR UNIT)]

(2) Find the following compensation coefficient [From 6. CAPACITY COMPENSATION COEFFICIENT].

- **Compensation coefficient of pipe length**
- **Compensation coefficient of frosting/defrosting** (Heating calculation only)

(3) Calculate **the estimated capacity of indoor unit (TCin)e.**

COOLING:

Estimated capacity of indoor unit (TCin)e
= Capacity of indoor unit at design temperature (TCin)d
x Compensation coefficient of pipe length

HEATING:

Estimated capacity of indoor unit (TCin)e
= Capacity of indoor unit at design temperature (TCin)d
x Compensation coefficient of pipe length
x Compensation coefficient of frosting/defrosting

2. Calculate the compensated capacity of outdoor unit.

(4) Find **capacity of outdoor unit at rated condition (TCout)r** [From 2. MODEL LINE UP].

(5) Calculate **total rated capacity of indoor units : ∑(TCin)r**
and **ratio to the rated capacity of outdoor unit : ∑(TCin)r / (TCout)r** .

(6) Find capacity of outdoor unit at design temperature (TCout)d
[using result of (5) and 4. CAPACITY TABLE (OUTDOOR UNIT)].

(7) Calculate the compensated capacity of outdoor unit (TCout)c.

COOLING:

Compensated capacity of outdoor unit (TCout)c
= Capacity of outdoor unit at design temperature (TCout)d
x Compensation coefficient of pipe length

HEATING:

Compensated capacity of outdoor unit (TCout)c
= Capacity of outdoor unit at design temperature (TCout)d
x Compensation coefficient of pipe length
x Compensation coefficient of frosting/defrosting

3. Decide system capacity.

(8) Calculate **total capacity of indoor units at design temperature ∑(TCin)d.**

(9) **System capacity** = the smaller one of (TCout)c and ∑(TCin)d. ••••••••• **(7) or (8)**

4. Calculate actual capacity of each indoor unit.

(10) Calculate actual capacity of each indoor unit by dividing system capacity proportionally.

Actual capacity of indoor unit = (System capacity) x (Rated capacity of indoor unit) / (Total rated capacity of indoor unit)
= (System capacity) x (TCin)r / ∑(TCin)r ••••• **(9) x (1) / (5)**

3-3. THE EXAMPLE OF CALCULATION

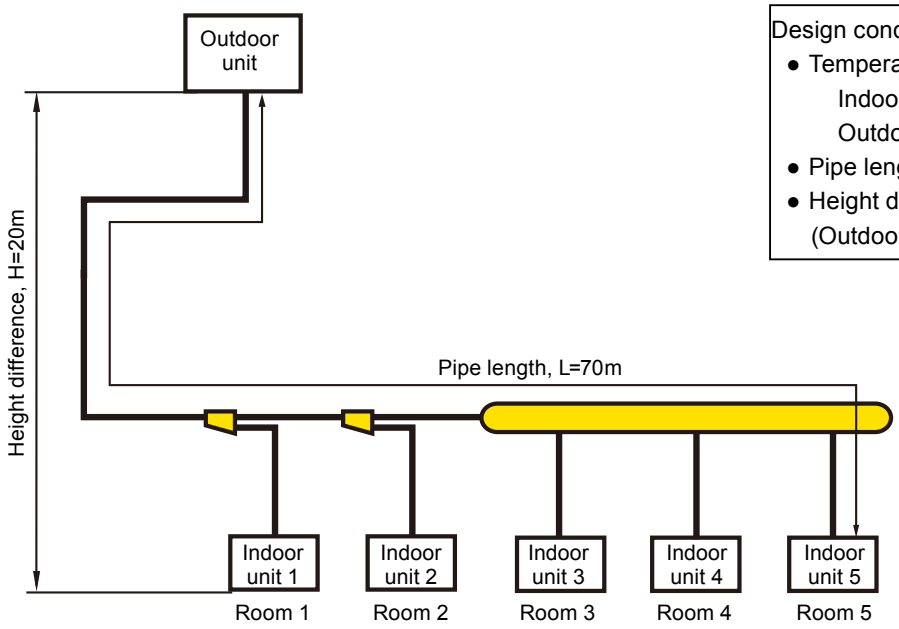

Design conditions:
- Temperature
  Indoor : 28°CDB / 20°CWB
  Outdoor : 35°CDB
- Pipe length : 70m
- Height difference : 20m
  (Outdoor unit upper side)

Fig.1 Outline of the system

● Selection of indoor unit

			Room 1	Room 2	Room 3	Room 4	Room 5	Remark
A-1	Cooling heat load	kW	3.0	3.0	3.0	2.0	1.5	
A-2	Indoor unit models		AUXB12	AUXB12	AUXB12	AUXB09	AUXB07	
A-3	Rated capacity $(TC_{in})_r$	kW	3.6	3.6	3.6	2.8	2.2	See 7
A-4	Capacity at design temperature $(TC_{in})_d$	kW	3.9	3.9	3.9	3.0	2.4	See 7
A-5	Compensation coefficient of pipe length		0.86					See 6
A-6	Estimated capacity of indoor unit $(TC_{in})_e$	kW	3.4	3.4	3.4	2.6	2.1	(A-4) x (A-5)
A-7	Total rated capacity $\sum(TC_{in})_r$	kW	15.8					Sum of A-3
A-8	Total capacity at design temperature $\sum(TC_{in})_d$	kW	17.1					Sum of A-4

● Preliminary selection of outdoor unit

				Remark
B-1	Outdoor unit model		5HP : AJ∗A45LALH	
B-2	Rated capacity $(TC_{out})_r$	kW	14.0	See 2
B-3	Total rated capacity of indoor unit / Rated capacity of outdoor unit $\sum(TC_{in})_r$ / $(TC_{out})_r$	%	112.9	(A-7) / (B-2)
B-4	Capacity at design temperature $(TC_{out})_d$	kW	16.2	See Fig.2 2)
B-5	Compensation coefficient of pipe length		0.86	See 6
B-6	Compensated capacity of outdoor unit $(TC_{out})_c$	kW	13.9	(B-4) x (B-5)

● Decide system capacity

				Remark
C-1	System capacity	kW	13.9	Smaller one of (A-8) and (B-6)

● Calculate actual capacity of each indoor unit

		Room 1	Room 2	Room 3	Room 4	Room 5	Remark
Actual capacity of each indoor unit	kW	3.2	3.2	3.2	2.5	1.9	(C-1) x (A-3) / (A-7)

1) Equation for capacity calculation of outdoor unit.

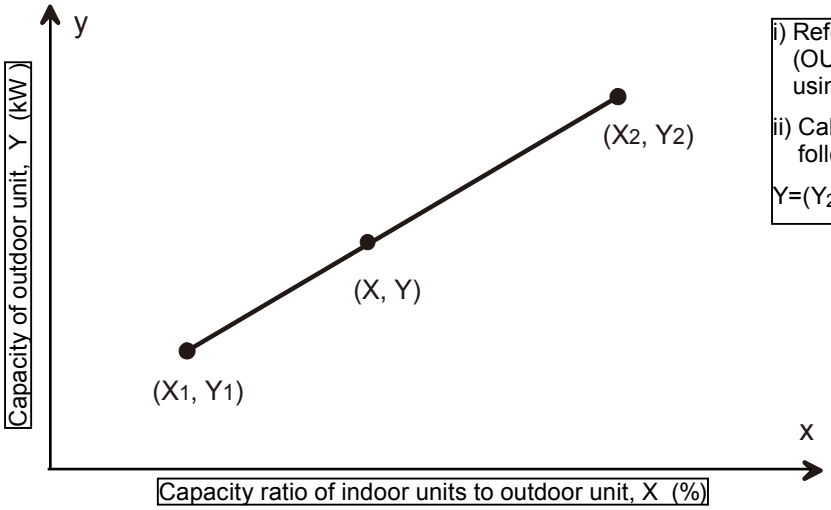

i) Refer to 4. CAPACIYY TABLE (OUTDOOR UNIT) to find Y_1 and Y_2 using X_1 and X_2.

ii) Calculate capacity of outdoor unit using following equation:

$Y=(Y_2-Y_1) / (X_2-X_1) \times (X-X_1) + Y_1$

2) Cooling capacity table of 5HP outdoor units: AJ∗A45LALH

Total rated cooling capacity of indoor unit	Outdoor temperature	Indoor temperature									
		20°CDB / 15 °CWB		27°CDB / 19 °CWB		28°CDB / 20 °CWB		30°CDB / 22 °CWB		32°CDB / 23 °CWB	
	(°CDB)	TC	IP	TC	IP	TC	IP	TC	IP	TC	IP
	10	11.1	1.91	16.8	2.85	18.2	3.08	19.4	3.20	19.8	3.22
	.	.	.	.	.	.	.	.	.	.	.
	.	.	.	.	.	.	.	.	.	.	.
16.8 (120%)	35	11.1	2.87	16.1	4.61	16.4	4.65	17.1	4.73	17.5	4.78
X_2	.	.	.	.	.	Y_2	.	.	.	.	.
	46	11.1	3.91	12.0	4.50		4.50	12.8	4.50	13.2	4.50
	10	11.5	1.98	15.4	2.62	16.7	2.83	19.0	3.18	19.4	3.20
	.	.	.	.	.	.	.	.	.	.	.
	.	.	.	.	.	.	.	.	.	.	.
15.4 (110%)	35	11.5	3.00	15.4	4.41	16.1	4.61	16.7	4.69	17.1	4.73
X_1	.	.	.	.	.	Y_1	.	.	.	.	.
	46	11.5	4.09	11.8	4.50		4.50	12.5	4.50	13.0	4.50

Capacity ratio of indoor units to outdoor unit	X1 = 110 %	X = 112.9 %	X2 = 120 %
Capacity of outdoor units (kW)	Y1 = 16.1	Y	Y2 = 16.4

$Y= (16.4-16.1) / (120-110) \times (112.9-110) + 16.1 =$ **16.2 (kW)**

Fig.2 Method for calculation of capacity of outdoor unit from capacity tables

4. CAPACITY TABLE COOLING (OUTDOOR UNIT)

COOLING CAPACITY

■ MODEL : AJ∗A40LALH

● Capacity : 12.1 kW (4HP)

Total rated cooling capacity of indoor unit	Outdoor temperature	Indoor temperature															
		20°CDB / 15 °CWB		23°CDB / 16 °CWB		24°CDB / 17 °CWB		26°CDB / 18 °CWB		27°CDB / 19 °CWB		28°CDB / 20 °CWB		30°CDB / 22 °CWB		32°CDB / 23 °CWB	
	(°CDB)	TC	IP	TC	IP	TC	IP	TC	IP	TC	IP	TC	IP	TC	IP	TC	IP
15.7 (130%)	10	10.4	1.73	11.7	1.94	13.0	2.15	14.4	2.36	15.7	2.57	17.0	2.76	17.7	2.80	18.1	2.82
	15	10.4	1.73	11.7	1.94	13.0	2.15	14.4	2.36	15.7	2.57	16.9	2.84	17.5	2.92	17.9	2.96
	21	10.4	1.77	11.7	2.07	13.0	2.39	14.4	2.74	15.7	3.11	16.3	3.22	16.9	3.29	17.2	3.33
	23	10.4	1.88	11.7	2.20	13.0	2.54	14.4	2.91	15.7	3.30	16.1	3.35	16.7	3.42	17.0	3.45
	25	10.4	2.00	11.7	2.33	13.0	2.70	14.4	3.09	15.6	3.44	15.9	3.47	16.5	3.54	16.8	3.58
	27	10.4	2.12	11.7	2.48	13.0	2.86	14.4	3.27	15.4	3.56	15.7	3.60	16.3	3.67	16.6	3.70
	30	10.4	2.31	11.7	2.70	13.0	3.12	14.4	3.57	15.1	3.75	15.4	3.79	16.0	3.85	16.3	3.89
	33	10.4	2.51	11.7	2.93	13.0	3.39	14.4	3.88	14.8	3.94	15.1	3.97	15.7	4.04	16.0	4.07
	35	10.4	2.65	11.7	3.10	13.0	3.58	14.2	4.04	14.6	4.08	14.9	4.11	15.5	4.19	15.8	4.23
	37	10.4	2.80	11.7	3.27	13.0	3.80	14.0	4.19	14.4	4.23	14.7	4.27	15.3	4.35	15.6	4.38
	40	10.4	3.04	11.7	3.58	13.0	4.16	13.8	4.42	14.1	4.46	14.4	4.50	15.0	4.58	15.3	4.62
	43	10.4	3.32	11.7	3.91	13.0	4.54	13.5	4.65	13.8	4.70	14.1	4.74	14.7	4.82	15.0	4.86
	46	10.4	3.62	11.7	4.26	12.1	4.50	12.3	4.50	12.5	4.50	12.7	4.50	13.1	4.50	13.3	4.50
14.5 (120%)	10	9.56	1.60	10.8	1.80	12.0	1.99	13.3	2.19	14.5	2.38	15.8	2.58	17.3	2.78	17.7	2.80
	15	9.56	1.60	10.8	1.80	12.0	1.99	13.3	2.19	14.5	2.38	15.8	2.58	17.2	2.88	17.5	2.92
	21	9.56	1.64	10.8	1.86	12.0	2.15	13.3	2.45	14.5	2.77	15.8	3.12	16.6	3.26	16.9	3.29
	23	9.56	1.70	10.8	1.98	12.0	2.28	13.3	2.60	14.5	2.95	15.8	3.31	16.4	3.38	16.7	3.42
	25	9.56	1.81	10.8	2.11	12.0	2.42	13.3	2.76	14.5	3.13	15.6	3.44	16.2	3.51	16.5	3.54
	27	9.56	1.92	10.8	2.23	12.0	2.57	13.3	2.93	14.5	3.32	15.4	3.57	16.0	3.63	16.3	3.67
	30	9.56	2.09	10.8	2.43	12.0	2.80	13.3	3.19	14.5	3.61	15.1	3.75	15.7	3.82	16.0	3.85
	33	9.56	2.27	10.8	2.65	12.0	3.05	13.3	3.47	14.5	3.91	14.8	3.94	15.4	4.01	15.7	4.04
	35	9.56	2.40	10.8	2.80	12.0	3.22	13.3	3.67	14.3	4.04	14.6	4.08	15.2	4.15	15.5	4.19
	37	9.56	2.53	10.8	2.95	12.0	3.40	13.3	3.90	14.1	4.20	14.4	4.24	15.0	4.31	15.3	4.35
	40	9.56	2.75	10.8	3.22	12.0	3.72	13.3	4.27	13.8	4.43	14.1	4.47	14.7	4.55	15.0	4.58
	43	9.56	3.00	10.8	3.51	12.0	4.06	13.2	4.62	13.5	4.66	13.8	4.70	14.4	4.78	14.7	4.82
	46	9.56	3.27	10.8	3.83	12.0	4.43	12.3	4.50	12.4	4.50	12.6	4.50	13.0	4.50	13.2	4.50
13.3 (110%)	10	8.76	1.48	9.90	1.66	11.0	1.84	12.2	2.01	13.3	2.19	14.4	2.37	16.7	2.73	17.2	2.78
	15	8.76	1.48	9.90	1.66	11.0	1.84	12.2	2.01	13.3	2.19	14.4	2.37	16.7	2.82	17.1	2.87
	21	8.76	1.51	9.90	1.69	11.0	1.92	12.2	2.18	13.3	2.46	14.4	2.75	16.2	3.21	16.5	3.25
	23	8.76	1.57	9.90	1.78	11.0	2.04	12.2	2.32	13.3	2.61	14.4	2.93	16.0	3.34	16.3	3.38
	25	8.76	1.63	9.90	1.89	11.0	2.16	12.2	2.46	13.3	2.77	14.4	3.11	15.8	3.47	16.1	3.50
	27	8.76	1.73	9.90	2.00	11.0	2.30	12.2	2.61	13.3	2.94	14.4	3.29	15.6	3.59	15.9	3.63
	30	8.76	1.88	9.90	2.18	11.0	2.50	12.2	2.84	13.3	3.20	14.4	3.59	15.3	3.78	15.6	3.82
	33	8.76	2.04	9.90	2.37	11.0	2.72	12.2	3.09	13.3	3.49	14.4	3.91	15.1	3.97	15.4	4.00
	35	8.76	2.16	9.90	2.51	11.0	2.87	12.2	3.27	13.3	3.68	14.3	4.04	14.9	4.11	15.2	4.15
	37	8.76	2.28	9.90	2.65	11.0	3.04	12.2	3.45	13.3	3.91	14.1	4.20	14.7	4.27	15.0	4.31
	40	8.76	2.47	9.90	2.87	11.0	3.31	12.2	3.78	13.3	4.28	13.8	4.43	14.4	4.51	14.7	4.54
	43	8.76	2.69	9.90	3.14	11.0	3.61	12.2	4.13	13.2	4.62	13.5	4.66	14.1	4.74	14.4	4.78
	46	8.76	2.93	9.90	3.42	11.0	3.94	12.2	4.50	12.3	4.50	12.4	4.50	12.8	4.50	13.0	4.50
12.1 (100%)	10	7.96	1.36	9.00	1.52	10.0	1.68	11.1	1.84	12.1	2.00	13.1	2.16	15.2	2.49	16.2	2.65
	15	7.96	1.36	9.00	1.52	10.0	1.68	11.1	1.84	12.1	2.00	13.1	2.16	15.2	2.49	16.2	2.70
	21	7.96	1.38	9.00	1.55	10.0	1.71	11.1	1.92	12.1	2.16	13.1	2.41	15.2	2.96	16.1	3.20
	23	7.96	1.44	9.00	1.61	10.0	1.81	11.1	2.05	12.1	2.30	13.1	2.57	15.2	3.15	15.9	3.33
	25	7.96	1.49	9.00	1.68	10.0	1.92	11.1	2.17	12.1	2.44	13.1	2.72	15.2	3.34	15.7	3.46
	27	7.96	1.55	9.00	1.78	10.0	2.04	11.1	2.30	12.1	2.59	13.1	2.89	15.2	3.54	15.5	3.58
	30	7.96	1.68	9.00	1.94	10.0	2.22	11.1	2.51	12.1	2.82	13.1	3.15	14.9	3.74	15.2	3.77
	33	7.96	1.83	9.00	2.11	10.0	2.41	11.1	2.73	12.1	3.07	13.1	3.42	14.7	3.93	15.0	3.96
	35	7.96	1.93	9.00	2.23	10.0	2.55	11.1	2.89	12.1	3.25	13.1	3.62	14.5	4.07	14.8	4.10
	37	7.96	2.03	9.00	2.35	10.0	2.69	11.1	3.05	12.1	3.42	13.1	3.84	14.3	4.22	14.6	4.26
	40	7.96	2.20	9.00	2.55	10.0	2.92	11.1	3.32	12.1	3.75	13.1	4.20	14.0	4.46	14.3	4.50
	43	7.96	2.39	9.00	2.78	10.0	3.19	11.1	3.63	12.1	4.09	13.1	4.59	13.7	4.69	14.0	4.73
	46	7.96	2.61	9.00	3.03	10.0	3.48	11.1	3.96	12.1	4.47	12.4	4.50	12.7	4.50	12.9	4.50
10.8 (90%)	10	7.17	1.23	8.10	1.38	9.03	1.52	10.0	1.67	10.8	1.81	11.8	1.96	13.7	2.25	14.6	2.40
	15	7.17	1.23	8.10	1.38	9.03	1.52	10.0	1.67	10.8	1.81	11.8	1.96	13.7	2.25	14.6	2.40
	21	7.17	1.25	8.10	1.40	9.03	1.55	10.0	1.70	10.8	1.89	11.8	2.10	13.7	2.55	14.6	2.80
	23	7.17	1.30	8.10	1.46	9.03	1.61	10.0	1.79	10.8	2.00	11.8	2.23	13.7	2.71	14.6	2.97
	25	7.17	1.35	8.10	1.51	9.03	1.69	10.0	1.90	10.8	2.13	11.8	2.37	13.7	2.88	14.6	3.16
	27	7.17	1.40	8.10	1.57	9.03	1.79	10.0	2.02	10.8	2.26	11.8	2.51	13.7	3.05	14.6	3.35
	30	7.17	1.49	8.10	1.71	9.03	1.95	10.0	2.20	10.8	2.46	11.8	2.73	13.7	3.33	14.6	3.65
	33	7.17	1.62	8.10	1.86	9.03	2.12	10.0	2.39	10.8	2.68	11.8	2.97	13.7	3.62	14.5	3.91
	35	7.17	1.71	8.10	1.97	9.03	2.24	10.0	2.53	10.8	2.83	11.8	3.14	13.7	3.83	14.3	4.05
	37	7.17	1.80	8.10	2.08	9.03	2.36	10.0	2.67	10.8	2.98	11.8	3.32	13.7	4.07	14.1	4.20
	40	7.17	1.95	8.10	2.25	9.03	2.56	10.0	2.90	10.8	3.25	11.8	3.63	13.6	4.40	13.9	4.44
	43	7.17	2.11	8.10	2.44	9.03	2.79	10.0	3.16	10.8	3.55	11.8	3.97	13.3	4.64	13.6	4.68
	46	7.17	2.30	8.10	2.66	9.03	3.04	10.0	3.44	10.8	3.87	11.8	4.32	12.3	4.50	12.5	4.50

TC : Total Capacity kW.

IP : Input Power kW (Compressor + Outdoor fan motor).

The data is based on the following conditions. Pipe length : 7.5m , Height difference : 0m.

MODEL SELECTION

COOLING CAPACITY

■ MODEL : AJ∗A40LALH

● Capacity : 12.1 kW (4HP)

Total rated cooling capacity of indoor unit	Outdoor temperature	Indoor temperature															
		20°CDB / 15 °CWB		23°CDB / 16 °CWB		24°CDB / 17 °CWB		26°CDB / 18 °CWB		27°CDB / 19 °CWB		28°CDB / 20 °CWB		30°CDB / 22 °CWB		32°CDB / 23 °CWB	
	(°CDB)	TC	IP	TC	IP	TC	IP	TC	IP	TC	IP	TC	IP	TC	IP	TC	IP
9.68 (80%)	10	6.37	1.11	7.20	1.24	8.03	1.37	8.85	1.49	9.68	1.62	10.5	1.75	12.2	2.01	13.0	2.14
	15	6.37	1.11	7.20	1.24	8.03	1.37	8.85	1.49	9.68	1.62	10.5	1.75	12.2	2.01	13.0	2.14
	21	6.37	1.13	7.20	1.26	8.03	1.39	8.85	1.52	9.68	1.66	10.5	1.80	12.2	2.18	13.0	2.38
	23	6.37	1.17	7.20	1.31	8.03	1.45	8.85	1.58	9.68	1.73	10.5	1.92	12.2	2.31	13.0	2.53
	25	6.37	1.21	7.20	1.36	8.03	1.50	8.85	1.65	9.68	1.84	10.5	2.03	12.2	2.46	13.0	2.68
	27	6.37	1.26	7.20	1.41	8.03	1.56	8.85	1.75	9.68	1.95	10.5	2.16	12.2	2.61	13.0	2.84
	30	6.37	1.33	7.20	1.50	8.03	1.70	8.85	1.90	9.68	2.12	10.5	2.35	12.2	2.84	13.0	3.10
	33	6.37	1.42	7.20	1.63	8.03	1.84	8.85	2.07	9.68	2.31	10.5	2.56	12.2	3.09	13.0	3.37
	35	6.37	1.50	7.20	1.72	8.03	1.95	8.85	2.19	9.68	2.44	10.5	2.70	12.2	3.26	13.0	3.56
	37	6.37	1.58	7.20	1.81	8.03	2.05	8.85	2.31	9.68	2.57	10.5	2.85	12.2	3.45	13.0	3.78
	40	6.37	1.71	7.20	1.96	8.03	2.22	8.85	2.50	9.68	2.79	10.5	3.10	12.2	3.77	13.0	4.14
	43	6.37	1.84	7.20	2.12	8.03	2.42	8.85	2.72	9.68	3.05	10.5	3.39	12.2	4.12	13.0	4.52
	46	6.37	2.01	7.20	2.31	8.03	2.63	8.85	2.97	9.68	3.32	10.5	3.69	11.4	4.50	11.5	4.50
8.47 (70%)	10	5.57	0.98	6.30	1.10	7.02	1.21	7.75	1.32	8.47	1.43	9.19	1.55	10.6	1.77	11.4	1.89
	15	5.57	0.98	6.30	1.10	7.02	1.21	7.75	1.32	8.47	1.43	9.19	1.55	10.6	1.77	11.4	1.89
	21	5.57	1.00	6.30	1.12	7.02	1.23	7.75	1.35	8.47	1.46	9.19	1.58	10.6	1.83	11.4	1.99
	23	5.57	1.04	6.30	1.16	7.02	1.28	7.75	1.40	8.47	1.52	9.19	1.64	10.6	1.95	11.4	2.12
	25	5.57	1.08	6.30	1.20	7.02	1.33	7.75	1.45	8.47	1.58	9.19	1.73	10.6	2.07	11.4	2.25
	27	5.57	1.12	6.30	1.25	7.02	1.38	7.75	1.51	8.47	1.66	9.19	1.83	10.6	2.19	11.4	2.38
	30	5.57	1.18	6.30	1.32	7.02	1.46	7.75	1.63	8.47	1.81	9.19	1.99	10.6	2.39	11.4	2.60
	33	5.57	1.24	6.30	1.40	7.02	1.58	7.75	1.77	8.47	1.96	9.19	2.17	10.6	2.60	11.4	2.83
	35	5.57	1.30	6.30	1.48	7.02	1.67	7.75	1.87	8.47	2.07	9.19	2.29	10.6	2.74	11.4	2.99
	37	5.57	1.37	6.30	1.56	7.02	1.76	7.75	1.97	8.47	2.19	9.19	2.42	10.6	2.90	11.4	3.15
	40	5.57	1.48	6.30	1.69	7.02	1.90	7.75	2.13	8.47	2.37	9.19	2.62	10.6	3.16	11.4	3.44
	43	5.57	1.59	6.30	1.82	7.02	2.06	7.75	2.32	8.47	2.58	9.19	2.86	10.6	3.45	11.4	3.76
	46	5.57	1.73	6.30	1.98	7.02	2.24	7.75	2.52	8.47	2.81	9.19	3.11	10.6	3.76	11.4	4.10
7.26 (60%)	10	4.78	0.86	5.40	0.95	6.02	1.05	6.64	1.15	7.26	1.25	7.88	1.34	9.12	1.54	9.74	1.63
	15	4.78	0.86	5.40	0.95	6.02	1.05	6.64	1.15	7.26	1.25	7.88	1.34	9.12	1.54	9.74	1.63
	21	4.78	0.87	5.40	0.97	6.02	1.07	6.64	1.17	7.26	1.27	7.88	1.37	9.12	1.57	9.74	1.67
	23	4.78	0.91	5.40	1.01	6.02	1.11	6.64	1.22	7.26	1.32	7.88	1.42	9.12	1.63	9.74	1.74
	25	4.78	0.94	5.40	1.05	6.02	1.15	6.64	1.26	7.26	1.37	7.88	1.48	9.12	1.71	9.74	1.85
	27	4.78	0.97	5.40	1.08	6.02	1.20	6.64	1.31	7.26	1.42	7.88	1.53	9.12	1.81	9.74	1.96
	30	4.78	1.02	5.40	1.14	6.02	1.26	6.64	1.38	7.26	1.51	7.88	1.66	9.12	1.97	9.74	2.14
	33	4.78	1.08	5.40	1.20	6.02	1.33	6.64	1.49	7.26	1.64	7.88	1.80	9.12	2.15	9.74	2.33
	35	4.78	1.12	5.40	1.25	6.02	1.41	6.64	1.57	7.26	1.73	7.88	1.91	9.12	2.27	9.74	2.46
	37	4.78	1.16	5.40	1.32	6.02	1.48	6.64	1.65	7.26	1.83	7.88	2.01	9.12	2.39	9.74	2.59
	40	4.78	1.25	5.40	1.43	6.02	1.60	6.64	1.79	7.26	1.98	7.88	2.18	9.12	2.59	9.74	2.81
	43	4.78	1.35	5.40	1.54	6.02	1.73	6.64	1.93	7.26	2.14	7.88	2.36	9.12	2.83	9.74	3.07
	46	4.78	1.46	5.40	1.67	6.02	1.88	6.64	2.10	7.26	2.33	7.88	2.57	9.12	3.08	9.74	3.35
6.05 (50%)	10	3.98	0.73	4.50	0.81	5.02	0.89	5.53	0.98	6.05	1.06	6.57	1.14	7.60	1.30	8.12	1.38
	15	3.98	0.73	4.50	0.81	5.02	0.89	5.53	0.98	6.05	1.06	6.57	1.14	7.60	1.30	8.12	1.38
	21	3.98	0.75	4.50	0.83	5.02	0.91	5.53	0.99	6.05	1.08	6.57	1.16	7.60	1.32	8.12	1.41
	23	3.98	0.77	4.50	0.86	5.02	0.95	5.53	1.03	6.05	1.12	6.57	1.20	7.60	1.38	8.12	1.46
	25	3.98	0.80	4.50	0.89	5.02	0.98	5.53	1.07	6.05	1.16	6.57	1.25	7.60	1.43	8.12	1.52
	27	3.98	0.83	4.50	0.92	5.02	1.02	5.53	1.11	6.05	1.20	6.57	1.30	7.60	1.48	8.12	1.58
	30	3.98	0.87	4.50	0.97	5.02	1.07	5.53	1.17	6.05	1.27	6.57	1.37	7.60	1.59	8.12	1.72
	33	3.98	0.92	4.50	1.02	5.02	1.13	5.53	1.23	6.05	1.34	6.57	1.47	7.60	1.73	8.12	1.87
	35	3.98	0.95	4.50	1.06	5.02	1.17	5.53	1.28	6.05	1.41	6.57	1.55	7.60	1.83	8.12	1.97
	37	3.98	0.98	4.50	1.09	5.02	1.22	5.53	1.35	6.05	1.49	6.57	1.63	7.60	1.93	8.12	2.08
	40	3.98	1.04	4.50	1.18	5.02	1.32	5.53	1.46	6.05	1.61	6.57	1.77	7.60	2.09	8.12	2.25
	43	3.98	1.12	4.50	1.27	5.02	1.42	5.53	1.58	6.05	1.74	6.57	1.91	7.60	2.26	8.12	2.45
	46	3.98	1.21	4.50	1.37	5.02	1.54	5.53	1.71	6.05	1.89	6.57	2.08	7.60	2.46	8.12	2.67

TC : Total Capacity kW.

IP : Input Power kW (Compressor + Outdoor fan motor).

The data is based on the following conditions. Pipe length : 7.5m , Height difference : 0m.

MODEL SELECTION

COOLING CAPACITY

■ MODEL : AJ∗A45LALH

● Capacity : 14.0 kW (5HP)

Total rated cooling capacity of indoor unit	Outdoor temperature	Indoor temperature															
		20°CDB / 15 °CWB		23°CDB / 16 °CWB		24°CDB / 17 °CWB		26°CDB / 18 °CWB		27°CDB / 19 °CWB		28°CDB / 20 °CWB		30°CDB / 22 °CWB		32°CDB / 23 °CWB	
	(°CDB)	TC	IP	TC	IP	TC	IP	TC	IP	TC	IP	TC	IP	TC	IP	TC	IP
18.2 (130%)	10	12.0	2.06	13.5	2.32	15.1	2.57	16.6	2.82	18.2	3.07	19.1	3.18	19.9	3.23	20.3	3.25
	15	12.0	2.06	13.5	2.32	15.1	2.57	16.6	2.82	18.2	3.07	19.0	3.23	19.7	3.32	20.1	3.36
	21	12.0	2.11	13.5	2.47	15.1	2.86	16.6	3.27	17.9	3.63	18.3	3.67	19.0	3.75	19.4	3.79
	23	12.0	2.24	13.5	2.63	15.1	3.04	16.6	3.48	17.7	3.77	18.1	3.81	18.8	3.89	19.2	3.93
	25	12.0	2.38	13.5	2.79	15.1	3.22	16.6	3.69	17.5	3.92	17.9	3.96	18.6	4.04	19.0	4.08
	27	12.0	2.53	13.5	2.96	15.1	3.42	16.6	3.92	17.3	4.06	17.6	4.10	18.4	4.18	18.7	4.22
	30	12.0	2.76	13.5	3.23	15.1	3.73	16.6	4.24	16.9	4.28	17.3	4.32	18.0	4.39	18.4	4.43
	33	12.0	3.00	13.5	3.51	15.1	4.06	16.2	4.46	16.6	4.50	16.9	4.53	17.7	4.61	18.0	4.64
	35	12.0	3.17	13.5	3.71	15.1	4.29	16.0	4.60	16.4	4.64	16.7	4.69	17.4	4.77	17.8	4.81
	37	12.0	3.35	13.5	3.92	15.1	4.55	15.8	4.78	16.1	4.82	16.5	4.87	17.2	4.95	17.6	5.00
	40	12.0	3.64	13.5	4.29	15.1	4.98	15.5	5.05	15.8	5.09	16.2	5.14	16.9	5.22	17.2	5.27
	43	12.0	3.98	13.5	4.68	14.0	5.00	14.3	5.00	14.5	5.00	14.7	5.00	15.1	5.00	15.4	5.00
	46	12.0	4.34	12.3	4.50	12.1	4.50	12.3	4.50	12.6	4.50	12.8	4.50	13.3	4.50	13.5	4.50
16.8 (120%)	10	11.1	1.91	12.5	2.15	13.9	2.38	15.4	2.61	16.8	2.85	18.2	3.08	19.4	3.20	19.8	3.22
	15	11.1	1.91	12.5	2.15	13.9	2.38	15.4	2.61	16.8	2.85	18.2	3.08	19.3	3.28	19.7	3.32
	21	11.1	1.95	12.5	2.23	13.9	2.56	15.4	2.93	16.8	3.31	18.0	3.63	18.7	3.71	19.0	3.75
	23	11.1	2.03	12.5	2.37	13.9	2.73	15.4	3.11	16.8	3.52	17.7	3.78	18.4	3.85	18.8	3.89
	25	11.1	2.16	12.5	2.51	13.9	2.90	15.4	3.30	16.8	3.74	17.5	3.92	18.2	4.00	18.6	4.04
	27	11.1	2.29	12.5	2.67	13.9	3.07	15.4	3.51	16.8	3.97	17.3	4.07	18.0	4.14	18.4	4.18
	30	11.1	2.50	12.5	2.91	13.9	3.35	15.4	3.82	16.6	4.25	17.0	4.28	17.7	4.36	18.0	4.40
	33	11.1	2.71	12.5	3.16	13.9	3.65	15.4	4.16	16.3	4.46	16.6	4.50	17.3	4.57	17.7	4.61
	35	11.1	2.87	12.5	3.34	13.9	3.85	15.4	4.40	16.1	4.61	16.4	4.65	17.1	4.73	17.5	4.78
	37	11.1	3.03	12.5	3.53	13.9	4.07	15.4	4.67	15.8	4.79	16.2	4.83	16.9	4.91	17.2	4.96
	40	11.1	3.29	12.5	3.85	13.9	4.46	15.2	5.01	15.5	5.05	15.9	5.10	16.6	5.19	16.9	5.23
	43	11.1	3.59	12.5	4.21	13.9	4.87	14.1	5.00	14.3	5.00	14.5	5.00	14.9	5.00	15.2	5.00
	46	11.1	3.91	12.3	4.50	12.4	4.50	12.4	4.50	12.6	4.50	12.9	4.50	13.3	4.50	13.6	4.50
15.4 (110%)	10	10.1	1.77	11.5	1.98	12.8	2.19	14.1	2.41	15.4	2.62	16.7	2.83	19.0	3.18	19.4	3.20
	15	10.1	1.77	11.5	1.98	12.8	2.19	14.1	2.41	15.4	2.62	16.7	2.83	18.9	3.23	19.3	3.27
	21	10.1	1.80	11.5	2.02	12.8	2.29	14.1	2.60	15.4	2.94	16.7	3.29	18.3	3.66	18.6	3.70
	23	10.1	1.87	11.5	2.12	12.8	2.43	14.1	2.77	15.4	3.12	16.7	3.50	18.0	3.81	18.4	3.85
	25	10.1	1.94	11.5	2.25	12.8	2.59	14.1	2.94	15.4	3.32	16.7	3.71	17.8	3.95	18.2	3.99
	27	10.1	2.06	11.5	2.39	12.8	2.74	14.1	3.12	15.4	3.52	16.7	3.94	17.6	4.10	18.0	4.14
	30	10.1	2.24	11.5	2.61	12.8	2.99	14.1	3.40	15.4	3.83	16.6	4.24	17.3	4.32	17.6	4.35
	33	10.1	2.44	11.5	2.84	12.8	3.25	14.1	3.70	15.4	4.17	16.3	4.46	17.0	4.53	17.3	4.57
	35	10.1	2.58	11.5	3.00	12.8	3.44	14.1	3.91	15.4	4.41	16.1	4.61	16.7	4.69	17.1	4.73
	37	10.1	2.72	11.5	3.16	12.8	3.63	14.1	4.13	15.4	4.68	15.8	4.79	16.5	4.87	16.9	4.91
	40	10.1	2.95	11.5	3.44	12.8	3.96	14.1	4.53	15.2	5.01	15.5	5.05	16.2	5.14	16.5	5.18
	43	10.1	3.22	11.5	3.75	12.8	4.33	14.1	4.95	14.1	5.00	14.3	5.00	14.7	5.00	14.9	5.00
	46	10.1	3.51	11.5	4.09	12.2	4.50	12.2	4.50	12.3	4.50	12.5	4.50	13.0	4.50	13.2	4.50
14.0 (100%)	10	9.21	1.62	10.4	1.81	11.6	2.00	12.8	2.20	14.0	2.39	15.2	2.59	17.6	2.98	18.8	3.17
	15	9.21	1.62	10.4	1.81	11.6	2.00	12.8	2.20	14.0	2.39	15.2	2.59	17.6	2.98	18.8	3.21
	21	9.21	1.65	10.4	1.85	11.6	2.04	12.8	2.30	14.0	2.58	15.2	2.88	17.6	3.54	18.1	3.65
	23	9.21	1.71	10.4	1.92	11.6	2.16	12.8	2.44	14.0	2.75	15.2	3.07	17.6	3.76	17.9	3.80
	25	9.21	1.78	10.4	2.00	11.6	2.29	12.8	2.59	14.0	2.92	15.2	3.26	17.4	3.90	17.7	3.94
	27	9.21	1.85	10.4	2.13	11.6	2.43	12.8	2.75	14.0	3.09	15.2	3.45	17.2	4.05	17.5	4.09
	30	9.21	2.01	10.4	2.32	11.6	2.65	12.8	3.00	14.0	3.37	15.2	3.77	16.8	4.27	17.2	4.31
	33	9.21	2.18	10.4	2.52	11.6	2.88	12.8	3.27	14.0	3.67	15.2	4.10	16.5	4.49	16.9	4.52
	35	9.21	2.30	10.4	2.66	11.6	3.05	12.8	3.45	14.0	3.89	15.2	4.33	16.3	4.64	16.6	4.68
	37	9.21	2.43	10.4	2.81	11.6	3.22	12.8	3.65	14.0	4.10	15.2	4.60	16.1	4.82	16.4	4.86
	40	9.21	2.63	10.4	3.05	11.6	3.50	12.8	3.98	14.0	4.49	15.1	5.00	15.8	5.09	16.1	5.13
	43	9.21	2.86	10.4	3.33	11.6	3.82	12.8	4.35	14.0	4.91	14.1	5.00	14.5	5.00	14.7	5.00
	46	9.21	3.12	10.4	3.62	11.6	4.16	12.2	4.50	12.4	4.50	12.4	4.50	12.8	4.50	13.1	4.50
12.6 (90%)	10	8.29	1.47	9.37	1.64	10.4	1.82	11.5	1.99	12.6	2.17	13.7	2.34	15.8	2.69	16.9	2.86
	15	8.29	1.47	9.37	1.64	10.4	1.82	11.5	1.99	12.6	2.17	13.7	2.34	15.8	2.69	16.9	2.86
	21	8.29	1.49	9.37	1.67	10.4	1.85	11.5	2.03	12.6	2.25	13.7	2.50	15.8	3.05	16.9	3.34
	23	8.29	1.55	9.37	1.74	10.4	1.93	11.5	2.14	12.6	2.39	13.7	2.66	15.8	3.24	16.9	3.56
	25	8.29	1.61	9.37	1.81	10.4	2.01	11.5	2.27	12.6	2.54	13.7	2.83	15.8	3.44	16.9	3.78
	27	8.29	1.67	9.37	1.88	10.4	2.14	11.5	2.41	12.6	2.70	13.7	3.00	15.8	3.65	16.9	4.00
	30	8.29	1.78	9.37	2.04	10.4	2.33	11.5	2.63	12.6	2.94	13.7	3.27	15.8	3.98	16.7	4.25
	33	8.29	1.93	9.37	2.22	10.4	2.53	11.5	2.86	12.6	3.20	13.7	3.56	15.8	4.33	16.4	4.47
	35	8.29	2.04	9.37	2.35	10.4	2.68	11.5	3.02	12.6	3.38	13.7	3.76	15.8	4.58	16.1	4.62
	37	8.29	2.15	9.37	2.48	10.4	2.83	11.5	3.19	12.6	3.57	13.7	3.97	15.6	4.76	15.9	4.80
	40	8.29	2.33	9.37	2.69	10.4	3.06	11.5	3.46	12.6	3.89	13.7	4.35	15.3	5.03	15.6	5.07
	43	8.29	2.52	9.37	2.92	10.4	3.34	11.5	3.78	12.6	4.25	13.7	4.75	14.2	5.00	14.4	5.00
	46	8.29	2.75	9.37	3.18	10.4	3.64	11.5	4.13	12.2	4.50	12.3	4.50	12.3	4.50	12.5	4.50

TC : Total Capacity kW.

IP : Input Power kW (Compressor + Outdoor fan motor).

The data is based on the following conditions. Pipe length : 7.5m , Height difference : 0m.

MODEL SELECTION

COOLING CAPACITY

■ MODEL : AJ∗A45LALH

● Capacity : 14.0 kW (5HP)

Total rated cooling capacity of indoor unit	Outdoor temperature	Indoor temperature															
		20°CDB / 15 °CWB		23°CDB / 16 °CWB		24°CDB / 17 °CWB		26°CDB / 18 °CWB		27°CDB / 19 °CWB		28°CDB / 20 °CWB		30°CDB / 22 °CWB		32°CDB / 23 °CWB	
	(°CDB)	TC	IP	TC	IP	TC	IP	TC	IP	TC	IP	TC	IP	TC	IP	TC	IP
11.2 (80%)	10	7.37	1.32	8.33	1.47	9.29	1.63	10.2	1.78	11.2	1.94	12.2	2.09	14.1	2.40	15.0	2.56
	15	7.37	1.32	8.33	1.47	9.29	1.63	10.2	1.78	11.2	1.94	12.2	2.09	14.1	2.40	15.0	2.56
	21	7.37	1.34	8.33	1.50	9.29	1.66	10.2	1.82	11.2	1.98	12.2	2.15	14.1	2.60	15.0	2.84
	23	7.37	1.39	8.33	1.56	9.29	1.72	10.2	1.89	11.2	2.06	12.2	2.29	14.1	2.76	15.0	3.02
	25	7.37	1.45	8.33	1.62	9.29	1.79	10.2	1.97	11.2	2.19	12.2	2.43	14.1	2.94	15.0	3.21
	27	7.37	1.50	8.33	1.68	9.29	1.86	10.2	2.09	11.2	2.33	12.2	2.58	14.1	3.11	15.0	3.40
	30	7.37	1.58	8.33	1.78	9.29	2.02	10.2	2.27	11.2	2.54	12.2	2.81	14.1	3.40	15.0	3.71
	33	7.37	1.69	8.33	1.94	9.29	2.20	10.2	2.47	11.2	2.76	12.2	3.06	14.1	3.70	15.0	4.04
	35	7.37	1.79	8.33	2.05	9.29	2.32	10.2	2.61	11.2	2.91	12.2	3.23	14.1	3.91	15.0	4.27
	37	7.37	1.88	8.33	2.16	9.29	2.45	10.2	2.76	11.2	3.08	12.2	3.41	14.1	4.13	15.0	4.53
	40	7.37	2.04	8.33	2.34	9.29	2.66	10.2	2.99	11.2	3.34	12.2	3.71	14.1	4.52	15.0	4.96
	43	7.37	2.20	8.33	2.54	9.29	2.89	10.2	3.26	11.2	3.65	12.2	4.06	14.1	4.94	14.1	5.00
	46	7.37	2.40	8.33	2.76	9.29	3.15	10.2	3.55	11.2	3.98	12.2	4.43	11.5	4.50	11.6	4.50
9.80 (70%)	10	6.45	1.17	7.29	1.30	8.12	1.44	8.96	1.57	9.80	1.71	10.6	1.85	12.3	2.12	13.2	2.25
	15	6.45	1.17	7.29	1.30	8.12	1.44	8.96	1.57	9.80	1.71	10.6	1.85	12.3	2.12	13.2	2.25
	21	6.45	1.19	7.29	1.33	8.12	1.47	8.96	1.61	9.80	1.74	10.6	1.88	12.3	2.18	13.2	2.38
	23	6.45	1.23	7.29	1.38	8.12	1.52	8.96	1.67	9.80	1.81	10.6	1.96	12.3	2.32	13.2	2.53
	25	6.45	1.28	7.29	1.43	8.12	1.58	8.96	1.73	9.80	1.88	10.6	2.06	12.3	2.47	13.2	2.69
	27	6.45	1.33	7.29	1.48	8.12	1.64	8.96	1.80	9.80	1.98	10.6	2.18	12.3	2.62	13.2	2.85
	30	6.45	1.40	7.29	1.57	8.12	1.73	8.96	1.94	9.80	2.16	10.6	2.38	12.3	2.86	13.2	3.11
	33	6.45	1.48	7.29	1.67	8.12	1.89	8.96	2.11	9.80	2.35	10.6	2.59	12.3	3.11	13.2	3.38
	35	6.45	1.54	7.29	1.76	8.12	1.99	8.96	2.23	9.80	2.48	10.6	2.74	12.3	3.28	13.2	3.57
	37	6.45	1.63	7.29	1.86	8.12	2.10	8.96	2.35	9.80	2.62	10.6	2.89	12.3	3.47	13.2	3.77
	40	6.45	1.76	7.29	2.01	8.12	2.27	8.96	2.55	9.80	2.83	10.6	3.13	12.3	3.78	13.2	4.12
	43	6.45	1.90	7.29	2.17	8.12	2.46	8.96	2.77	9.80	3.09	10.6	3.42	12.3	4.13	13.2	4.50
	46	6.45	2.06	7.29	2.36	8.12	2.68	8.96	3.01	9.80	3.36	10.6	3.72	12.3	4.50	12.1	4.50
8.40 (60%)	10	5.53	1.02	6.25	1.13	6.96	1.25	7.68	1.37	8.40	1.48	9.12	1.60	10.6	1.83	11.3	1.95
	15	5.53	1.02	6.25	1.13	6.96	1.25	7.68	1.37	8.40	1.48	9.12	1.60	10.6	1.83	11.3	1.95
	21	5.53	1.04	6.25	1.16	6.96	1.27	7.68	1.39	8.40	1.51	9.12	1.63	10.6	1.87	11.3	1.99
	23	5.53	1.08	6.25	1.20	6.96	1.32	7.68	1.45	8.40	1.57	9.12	1.70	10.6	1.94	11.3	2.08
	25	5.53	1.11	6.25	1.24	6.96	1.37	7.68	1.50	8.40	1.63	9.12	1.76	10.6	2.04	11.3	2.21
	27	5.53	1.16	6.25	1.29	6.96	1.42	7.68	1.56	8.40	1.69	9.12	1.83	10.6	2.16	11.3	2.34
	30	5.53	1.22	6.25	1.36	6.96	1.50	7.68	1.65	8.40	1.80	9.12	1.98	10.6	2.36	11.3	2.56
	33	5.53	1.28	6.25	1.43	6.96	1.59	7.68	1.77	8.40	1.96	9.12	2.15	10.6	2.56	11.3	2.78
	35	5.53	1.33	6.25	1.49	6.96	1.68	7.68	1.87	8.40	2.07	9.12	2.28	10.6	2.71	11.3	2.94
	37	5.53	1.38	6.25	1.57	6.96	1.77	7.68	1.97	8.40	2.18	9.12	2.40	10.6	2.86	11.3	3.10
	40	5.53	1.49	6.25	1.70	6.96	1.91	7.68	2.13	8.40	2.36	9.12	2.60	10.6	3.10	11.3	3.37
	43	5.53	1.61	6.25	1.83	6.96	2.07	7.68	2.31	8.40	2.56	9.12	2.83	10.6	3.38	11.3	3.68
	46	5.53	1.74	6.25	1.99	6.96	2.25	7.68	2.51	8.40	2.79	9.12	3.08	10.6	3.69	11.3	4.01
7.00 (50%)	10	4.61	0.87	5.21	0.96	5.80	1.06	6.40	1.16	7.00	1.26	7.60	1.35	8.79	1.55	9.39	1.64
	15	4.61	0.87	5.21	0.96	5.80	1.06	6.40	1.16	7.00	1.26	7.60	1.35	8.79	1.55	9.39	1.64
	21	4.61	0.88	5.21	0.98	5.80	1.08	6.40	1.18	7.00	1.28	7.60	1.38	8.79	1.58	9.39	1.68
	23	4.61	0.92	5.21	1.02	5.80	1.12	6.40	1.23	7.00	1.33	7.60	1.43	8.79	1.64	9.39	1.74
	25	4.61	0.95	5.21	1.06	5.80	1.16	6.40	1.27	7.00	1.38	7.60	1.49	8.79	1.70	9.39	1.81
	27	4.61	0.98	5.21	1.09	5.80	1.21	6.40	1.32	7.00	1.43	7.60	1.54	8.79	1.77	9.39	1.88
	30	4.61	1.04	5.21	1.15	5.80	1.27	6.40	1.39	7.00	1.51	7.60	1.63	8.79	1.90	9.39	2.05
	33	4.61	1.09	5.21	1.21	5.80	1.34	6.40	1.47	7.00	1.60	7.60	1.75	8.79	2.07	9.39	2.23
	35	4.61	1.13	5.21	1.26	5.80	1.39	6.40	1.53	7.00	1.69	7.60	1.85	8.79	2.18	9.39	2.36
	37	4.61	1.16	5.21	1.30	5.80	1.45	6.40	1.61	7.00	1.78	7.60	1.95	8.79	2.30	9.39	2.49
	40	4.61	1.24	5.21	1.40	5.80	1.57	6.40	1.74	7.00	1.92	7.60	2.11	8.79	2.49	9.39	2.69
	43	4.61	1.33	5.21	1.51	5.80	1.70	6.40	1.88	7.00	2.08	7.60	2.28	8.79	2.71	9.39	2.93
	46	4.61	1.44	5.21	1.63	5.80	1.83	6.40	2.04	7.00	2.26	7.60	2.48	8.79	2.95	9.39	3.19

TC : Total Capacity kW.

IP : Input Power kW (Compressor + Outdoor fan motor).

The data is based on the following conditions. Pipe length : 7.5m , Height difference : 0m.

MODEL SELECTION

COOLING CAPACITY

■ MODEL : AJ✶A54LALH

● Capacity : 15.5 kW (6HP)

Total rated cooling capacity of indoor unit	Outdoor temperature	Indoor temperature															
		20°CDB / 15 °CWB		23°CDB / 16 °CWB		24°CDB / 17 °CWB		26°CDB / 18 °CWB		27°CDB / 19 °CWB		28°CDB / 20 °CWB		30°CDB / 22 °CWB		32°CDB / 23 °CWB	
	(°CDB)	TC	IP	TC	IP	TC	IP	TC	IP	TC	IP	TC	IP	TC	IP	TC	IP
20.2 (130%)	10	13.3	2.39	15.0	2.68	16.7	2.97	18.4	3.26	19.4	3.39	19.8	3.41	20.6	3.45	21.1	3.48
	15	13.3	2.39	15.0	2.68	16.7	2.97	18.4	3.26	19.4	3.39	19.8	3.41	20.6	3.47	21.0	3.51
	21	13.3	2.44	15.0	2.85	16.7	3.30	18.4	3.75	18.7	3.79	19.1	3.84	19.9	3.92	20.3	3.96
	23	13.3	2.59	15.0	3.03	16.7	3.50	18.1	3.91	18.5	3.95	18.9	3.99	19.7	4.07	20.0	4.11
	25	13.3	2.75	15.0	3.22	16.7	3.72	17.9	4.06	18.3	4.10	18.7	4.14	19.4	4.22	19.8	4.26
	27	13.3	2.92	15.0	3.42	16.7	3.95	17.7	4.21	18.0	4.25	18.4	4.29	19.2	4.37	19.6	4.41
	30	13.3	3.18	15.0	3.72	16.7	4.30	17.3	4.44	17.7	4.48	18.1	4.52	18.8	4.60	19.2	4.64
	33	13.3	3.46	15.0	4.05	16.6	4.63	17.0	4.67	17.3	4.71	17.7	4.75	18.5	4.82	18.9	4.86
	35	13.3	3.66	15.0	4.28	16.4	4.78	16.7	4.82	17.1	4.86	17.5	4.90	18.2	4.98	18.6	5.02
	37	13.3	3.87	15.0	4.52	16.1	4.95	16.5	4.99	16.9	5.04	17.2	5.08	18.0	5.17	18.4	5.21
	40	13.3	4.21	15.0	4.95	15.8	5.23	16.1	5.28	16.5	5.32	16.8	5.35	17.3	5.35	17.6	5.35
	43	13.3	4.60	13.8	5.00	14.0	5.00	14.2	5.00	14.5	5.00	14.7	5.00	15.2	5.00	15.5	5.00
	46	12.3	4.50	11.8	4.50	12.1	4.50	12.3	4.50	12.6	4.50	12.8	4.50	13.3	4.50	13.6	4.50
18.6 (120%)	10	12.2	2.22	13.8	2.48	15.4	2.75	17.0	3.02	18.6	3.29	19.4	3.39	20.2	3.43	20.6	3.45
	15	12.2	2.22	13.8	2.48	15.4	2.75	17.0	3.02	18.6	3.29	19.4	3.39	20.2	3.43	20.6	3.47
	21	12.2	2.26	13.8	2.57	15.4	2.96	17.0	3.38	18.4	3.76	18.8	3.80	19.5	3.88	19.9	3.92
	23	12.2	2.35	13.8	2.73	15.4	3.15	17.0	3.59	18.2	3.91	18.5	3.95	19.3	4.03	19.7	4.07
	25	12.2	2.49	13.8	2.90	15.4	3.34	17.0	3.81	17.9	4.06	18.3	4.10	19.1	4.19	19.4	4.23
	27	12.2	2.65	13.8	3.08	15.4	3.55	17.0	4.04	17.7	4.22	18.1	4.26	18.8	4.34	19.2	4.38
	30	12.2	2.88	13.8	3.36	15.4	3.87	17.0	4.41	17.4	4.45	17.7	4.49	18.5	4.56	18.9	4.60
	33	12.2	3.14	13.8	3.65	15.4	4.21	16.7	4.64	17.0	4.68	17.4	4.72	18.1	4.79	18.5	4.83
	35	12.2	3.31	13.8	3.86	15.4	4.45	16.4	4.79	16.8	4.83	17.2	4.87	17.9	4.94	18.3	4.98
	37	12.2	3.50	13.8	4.08	15.4	4.70	16.2	4.96	16.6	5.00	16.9	5.04	17.7	5.13	18.0	5.17
	40	12.2	3.80	13.8	4.45	15.4	5.15	15.9	5.24	16.2	5.29	16.6	5.33	17.1	5.35	17.4	5.35
	43	12.2	4.14	13.8	4.86	13.8	5.00	14.1	5.00	14.3	5.00	14.5	5.00	15.0	5.00	15.2	5.00
	46	12.2	4.50	12.3	4.50	12.1	4.50	12.4	4.50	12.6	4.50	12.9	4.50	13.4	4.50	13.6	4.50
17.1 (110%)	10	11.2	2.04	12.7	2.29	14.1	2.54	15.6	2.78	17.1	3.03	18.5	3.27	19.7	3.41	20.1	3.43
	15	11.2	2.04	12.7	2.29	14.1	2.54	15.6	2.78	17.1	3.03	18.5	3.27	19.7	3.41	20.1	3.43
	21	11.2	2.08	12.7	2.34	14.1	2.64	15.6	3.00	17.1	3.39	18.4	3.75	19.1	3.84	19.5	3.88
	23	11.2	2.17	12.7	2.45	14.1	2.81	15.6	3.20	17.1	3.60	18.2	3.91	18.9	3.99	19.3	4.03
	25	11.2	2.25	12.7	2.60	14.1	2.99	15.6	3.39	17.1	3.83	17.9	4.06	18.7	4.14	19.0	4.18
	27	11.2	2.38	12.7	2.76	14.1	3.17	15.6	3.60	17.1	4.06	17.7	4.22	18.4	4.30	18.8	4.33
	30	11.2	2.60	12.7	3.01	14.1	3.45	15.6	3.92	17.0	4.41	17.4	4.45	18.1	4.52	18.5	4.56
	33	11.2	2.82	12.7	3.28	14.1	3.76	15.6	4.27	16.7	4.64	17.0	4.68	17.8	4.75	18.1	4.79
	35	11.2	2.98	12.7	3.46	14.1	3.97	15.6	4.51	16.5	4.79	16.8	4.83	17.5	4.90	17.9	4.94
	37	11.2	3.15	12.7	3.65	14.1	4.19	15.6	4.77	16.2	4.96	16.6	5.00	17.3	5.09	17.7	5.13
	40	11.2	3.41	12.7	3.97	14.1	4.58	15.6	5.20	15.9	5.24	16.2	5.29	16.9	5.35	17.1	5.35
	43	11.2	3.72	12.7	4.33	14.1	5.00	13.9	5.00	14.1	5.00	14.3	5.00	14.8	5.00	15.0	5.00
	46	11.2	4.05	12.1	4.50	12.1	4.50	12.1	4.50	12.3	4.50	12.5	4.50	13.0	4.50	13.3	4.50
15.5 (100%)	10	10.2	1.87	11.5	2.10	12.9	2.32	14.2	2.54	15.5	2.77	16.8	2.99	19.2	3.38	19.6	3.40
	15	10.2	1.87	11.5	2.10	12.9	2.32	14.2	2.54	15.5	2.77	16.8	2.99	19.2	3.38	19.6	3.40
	21	10.2	1.91	11.5	2.14	12.9	2.36	14.2	2.65	15.5	2.98	16.8	3.33	18.6	3.78	19.0	3.82
	23	10.2	1.98	11.5	2.22	12.9	2.49	14.2	2.82	15.5	3.17	16.8	3.54	18.4	3.94	18.8	3.98
	25	10.2	2.06	11.5	2.32	12.9	2.65	14.2	3.00	15.5	3.37	16.8	3.76	18.2	4.09	18.6	4.13
	27	10.2	2.14	11.5	2.46	12.9	2.81	14.2	3.18	15.5	3.57	16.8	3.98	18.0	4.25	18.3	4.29
	30	10.2	2.32	11.5	2.68	12.9	3.06	14.2	3.47	15.5	3.89	16.8	4.35	17.7	4.48	18.0	4.52
	33	10.2	2.52	11.5	2.91	12.9	3.33	14.2	3.77	15.5	4.24	16.6	4.64	17.3	4.71	17.7	4.74
	35	10.2	2.66	11.5	3.08	12.9	3.52	14.2	3.99	15.5	4.49	16.4	4.79	17.1	4.86	17.5	4.90
	37	10.2	2.81	11.5	3.25	12.9	3.72	14.2	4.21	15.5	4.73	16.2	4.96	16.9	5.04	17.2	5.08
	40	10.2	3.04	11.5	3.52	12.9	4.04	14.2	4.59	15.5	5.18	15.9	5.24	16.6	5.33	16.8	5.35
	43	10.2	3.31	11.5	3.84	12.9	4.41	14.1	5.00	13.9	5.00	14.1	5.00	14.5	5.00	14.7	5.00
	46	10.2	3.60	11.5	4.19	12.0	4.50	12.2	4.50	12.2	4.50	12.4	4.50	12.9	4.50	13.1	4.50
14.0 (90%)	10	9.18	1.70	10.4	1.90	11.6	2.10	12.8	2.30	14.0	2.50	15.1	2.71	17.5	3.11	18.7	3.31
	15	9.18	1.70	10.4	1.90	11.6	2.10	12.8	2.30	14.0	2.50	15.1	2.71	17.5	3.11	18.7	3.31
	21	9.18	1.73	10.4	1.94	11.6	2.14	12.8	2.35	14.0	2.60	15.1	2.89	17.5	3.52	18.5	3.76
	23	9.18	1.80	10.4	2.01	11.6	2.23	12.8	2.47	14.0	2.76	15.1	3.07	17.5	3.74	18.2	3.92
	25	9.18	1.87	10.4	2.09	11.6	2.33	12.8	2.62	14.0	2.94	15.1	3.26	17.5	3.97	18.0	4.07
	27	9.18	1.94	10.4	2.17	11.6	2.47	12.8	2.78	14.0	3.11	15.1	3.46	17.5	4.19	17.8	4.23
	30	9.18	2.06	10.4	2.36	11.6	2.69	12.8	3.03	14.0	3.40	15.1	3.78	17.2	4.42	17.5	4.46
	33	9.18	2.23	10.4	2.57	11.6	2.93	12.8	3.30	14.0	3.69	15.1	4.11	16.8	4.66	17.2	4.69
	35	9.18	2.36	10.4	2.72	11.6	3.09	12.8	3.49	14.0	3.90	15.1	4.34	16.6	4.81	17.0	4.85
	37	9.18	2.49	10.4	2.87	11.6	3.26	12.8	3.68	14.0	4.12	15.1	4.59	16.4	4.98	16.7	5.02
	40	9.18	2.69	10.4	3.10	11.6	3.54	12.8	4.00	14.0	4.50	15.1	5.02	16.1	5.27	16.4	5.31
	43	9.18	2.92	10.4	3.37	11.6	3.86	12.8	4.37	14.0	4.91	13.8	5.00	14.2	5.00	14.4	5.00
	46	9.18	3.18	10.4	3.68	11.6	4.20	12.1	4.50	12.1	4.50	11.9	4.50	12.3	4.50	12.5	4.50

TC : Total Capacity kW.

IP : Input Power kW (Compressor + Outdoor fan motor).

The data is based on the following conditions. Pipe length : 7.5m , Height difference : 0m.

MODEL SELECTION

COOLING CAPACITY

■ MODEL : AJ∗A54LALH

● Capacity : 15.5 kW (6HP)

Total rated cooling capacity of indoor unit	Outdoor temperature	Indoor temperature															
		20°CDB / 15 °CWB		23°CDB / 16 °CWB		24°CDB / 17 °CWB		26°CDB / 18 °CWB		27°CDB / 19 °CWB		28°CDB / 20 °CWB		30°CDB / 22 °CWB		32°CDB / 23 °CWB	
	(°CDB)	TC	IP	TC	IP	TC	IP	TC	IP	TC	IP	TC	IP	TC	IP	TC	IP
12.4 (80%)	10	8.16	1.53	9.22	1.71	10.3	1.89	11.3	2.06	12.4	2.24	13.5	2.42	15.6	2.78	16.6	2.96
	15	8.16	1.53	9.22	1.71	10.3	1.89	11.3	2.06	12.4	2.24	13.5	2.42	15.6	2.78	16.6	2.96
	21	8.16	1.56	9.22	1.74	10.3	1.92	11.3	2.10	12.4	2.29	13.5	2.48	15.6	3.00	16.6	3.28
	23	8.16	1.62	9.22	1.81	10.3	2.00	11.3	2.19	12.4	2.39	13.5	2.64	15.6	3.19	16.6	3.49
	25	8.16	1.68	9.22	1.88	10.3	2.07	11.3	2.27	12.4	2.53	13.5	2.81	15.6	3.39	16.6	3.70
	27	8.16	1.74	9.22	1.95	10.3	2.15	11.3	2.41	12.4	2.69	13.5	2.98	15.6	3.59	16.6	3.93
	30	8.16	1.84	9.22	2.07	10.3	2.34	11.3	2.63	12.4	2.93	13.5	3.24	15.6	3.92	16.6	4.28
	33	8.16	1.96	9.22	2.24	10.3	2.54	11.3	2.86	12.4	3.19	13.5	3.53	15.6	4.27	16.6	4.63
	35	8.16	2.07	9.22	2.37	10.3	2.69	11.3	3.02	12.4	3.37	13.5	3.73	15.6	4.51	16.4	4.79
	37	8.16	2.18	9.22	2.50	10.3	2.84	11.3	3.19	12.4	3.55	13.5	3.94	15.6	4.77	16.2	4.95
	40	8.16	2.36	9.22	2.71	10.3	3.07	11.3	3.45	12.4	3.86	13.5	4.29	15.6	5.20	15.9	5.24
	43	8.16	2.55	9.22	2.93	10.3	3.34	11.3	3.76	12.4	4.21	13.5	4.69	13.9	5.00	14.1	5.00
	46	8.16	2.77	9.22	3.19	10.3	3.64	11.3	4.10	11.9	4.50	11.6	4.50	11.4	4.50	11.6	4.50
10.9 (70%)	10	7.14	1.36	8.07	1.51	9.00	1.67	9.92	1.82	10.9	1.98	11.8	2.14	13.6	2.45	14.6	2.61
	15	7.14	1.36	8.07	1.51	9.00	1.67	9.92	1.82	10.9	1.98	11.8	2.14	13.6	2.45	14.6	2.61
	21	7.14	1.38	8.07	1.54	9.00	1.70	9.92	1.86	10.9	2.02	11.8	2.18	13.6	2.52	14.6	2.75
	23	7.14	1.43	8.07	1.60	9.00	1.77	9.92	1.93	10.9	2.10	11.8	2.27	13.6	2.68	14.6	2.92
	25	7.14	1.49	8.07	1.66	9.00	1.83	9.92	2.01	10.9	2.18	11.8	2.38	13.6	2.85	14.6	3.10
	27	7.14	1.54	8.07	1.72	9.00	1.90	9.92	2.08	10.9	2.29	11.8	2.52	13.6	3.02	14.6	3.29
	30	7.14	1.62	8.07	1.82	9.00	2.01	9.92	2.25	10.9	2.49	11.8	2.75	13.6	3.30	14.6	3.59
	33	7.14	1.71	8.07	1.93	9.00	2.18	9.92	2.44	10.9	2.71	11.8	2.99	13.6	3.59	14.6	3.90
	35	7.14	1.79	8.07	2.04	9.00	2.30	9.92	2.58	10.9	2.86	11.8	3.16	13.6	3.79	14.6	4.13
	37	7.14	1.88	8.07	2.15	9.00	2.43	9.92	2.72	10.9	3.02	11.8	3.34	13.6	4.00	14.6	4.36
	40	7.14	2.04	8.07	2.33	9.00	2.63	9.92	2.95	10.9	3.27	11.8	3.62	13.6	4.36	14.6	4.76
	43	7.14	2.20	8.07	2.51	9.00	2.85	9.92	3.20	10.9	3.56	11.8	3.95	13.6	4.76	14.0	5.00
	46	7.14	2.38	8.07	2.73	9.00	3.10	9.92	3.48	10.9	3.88	11.8	4.30	11.8	4.50	11.5	4.50
9.30 (60%)	10	6.12	1.18	6.92	1.32	7.71	1.45	8.51	1.59	9.30	1.72	10.1	2.60	11.7	2.12	12.5	2.26
	15	6.12	1.18	6.92	1.32	7.71	1.45	8.51	1.59	9.30	1.72	10.1	1.59	11.7	2.12	12.5	2.26
	21	6.12	1.20	6.92	1.34	7.71	1.48	8.51	1.62	9.30	1.75	10.1	1.59	11.7	2.16	12.5	2.30
	23	6.12	1.25	6.92	1.39	7.71	1.54	8.51	1.68	9.30	1.82	10.1	1.59	11.7	2.25	12.5	2.40
	25	6.12	1.30	6.92	1.44	7.71	1.59	8.51	1.74	9.30	1.89	10.1	1.59	11.7	2.36	12.5	2.55
	27	6.12	1.34	6.92	1.50	7.71	1.65	8.51	1.81	9.30	1.96	10.1	1.62	11.7	2.50	12.5	2.71
	30	6.12	1.41	6.92	1.58	7.71	1.74	8.51	1.91	9.30	2.09	10.1	1.71	11.7	2.72	12.5	2.95
	33	6.12	1.49	6.92	1.66	7.71	1.84	8.51	2.05	9.30	2.27	10.1	1.81	11.7	2.96	12.5	3.21
	35	6.12	1.54	6.92	1.73	7.71	1.94	8.51	2.16	9.30	2.39	10.1	1.87	11.7	3.13	12.5	3.39
	37	6.12	1.60	6.92	1.82	7.71	2.05	8.51	2.28	9.30	2.52	10.1	1.94	11.7	3.30	12.5	3.58
	40	6.12	1.73	6.92	1.97	7.71	2.21	8.51	2.47	9.30	2.73	10.1	2.11	11.7	3.58	12.5	3.89
	43	6.12	1.87	6.92	2.12	7.71	2.39	8.51	2.67	9.30	2.96	10.1	2.28	11.7	3.91	12.5	4.25
	46	6.12	2.02	6.92	2.30	7.71	2.60	8.51	2.91	9.30	3.22	10.1	2.47	11.7	4.26	12.1	4.50
7.75 (50%)	10	5.10	1.01	5.76	1.12	6.43	1.23	7.09	1.35	7.75	1.46	8.41	1.57	9.74	1.79	10.4	1.91
	15	5.10	1.01	5.76	1.12	6.43	1.23	7.09	1.35	7.75	1.46	8.41	1.57	9.74	1.79	10.4	1.91
	21	5.10	1.03	5.76	1.14	6.43	1.26	7.09	1.37	7.75	1.49	8.41	1.60	9.74	1.83	10.4	1.94
	23	5.10	1.07	5.76	1.19	6.43	1.30	7.09	1.42	7.75	1.54	8.41	1.66	9.74	1.90	10.4	2.02
	25	5.10	1.10	5.76	1.23	6.43	1.35	7.09	1.48	7.75	1.60	8.41	1.72	9.74	1.97	10.4	2.10
	27	5.10	1.14	5.76	1.27	6.43	1.40	7.09	1.53	7.75	1.66	8.41	1.79	9.74	2.05	10.4	2.18
	30	5.10	1.20	5.76	1.34	6.43	1.48	7.09	1.61	7.75	1.75	8.41	1.89	9.74	2.20	10.4	2.37
	33	5.10	1.27	5.76	1.41	6.43	1.56	7.09	1.70	7.75	1.85	8.41	2.02	9.74	2.39	10.4	2.58
	35	5.10	1.31	5.76	1.46	6.43	1.61	7.09	1.77	7.75	1.95	8.41	2.14	9.74	2.52	10.4	2.72
	37	5.10	1.35	5.76	1.51	6.43	1.68	7.09	1.87	7.75	2.06	8.41	2.25	9.74	2.66	10.4	2.87
	40	5.10	1.44	5.76	1.63	6.43	1.82	7.09	2.02	7.75	2.23	8.41	2.44	9.74	2.88	10.4	3.11
	43	5.10	1.55	5.76	1.75	6.43	1.96	7.09	2.18	7.75	2.40	8.41	2.64	9.74	3.13	10.4	3.38
	46	5.10	1.67	5.76	1.89	6.43	2.12	7.09	2.36	7.75	2.61	8.41	2.87	9.74	3.41	10.4	3.69

TC : Total Capacity kW.

IP : Input Power kW (Compressor + Outdoor fan motor).

The data is based on the following conditions. Pipe length : 7.5m , Height difference : 0m.

5. CAPACITY TABLE HEATING (OUTDOOR UNIT)

HEATING CAPACITY

■ MODEL : AJ∗A40LALH

● Capacity : 13.6 kW (4HP)

Total rated cooling capacity of indoor unit	Outdoor temperature		Indoor temperature													
			16°CDB		18°CDB		20°CDB		21°CDB		22°CDB		24°CDB		26°CDB	
	(°CDB)	(°CWB)	TC	IP	TC	IP	TC	IP	TC	IP	TC	IP	TC	IP	TC	IP
17.6 (130%)	-19.3	**-20.0**	11.1	3.21	11.0	3.32	11.0	3.43	11.0	3.49	11.0	3.54	11.0	3.65	11.0	3.76
	-15.0	**-16.0**	12.3	3.39	12.3	3.51	12.3	3.63	12.3	3.69	12.2	3.75	12.2	3.88	12.2	4.00
	-12.0	**-13.0**	13.2	3.54	13.2	3.67	13.1	3.80	13.1	3.87	13.1	3.93	13.0	4.06	13.0	4.20
	-9.0	**-10.0**	14.4	3.65	14.3	3.79	14.3	3.92	14.3	3.99	14.2	4.05	14.2	4.19	14.1	4.32
	-7.0	**-8.0**	15.4	3.74	15.3	3.88	15.3	4.01	15.2	4.08	15.2	4.15	15.1	4.29	14.1	4.43
	-5.0	**-6.0**	15.6	3.80	15.5	3.94	15.4	4.07	15.4	4.14	15.4	4.21	15.3	4.35	14.1	4.33
	-3.0	**-4.0**	16.0	3.86	15.9	4.00	15.9	4.13	15.8	4.20	15.8	4.27	15.3	4.41	14.1	4.08
	-1.0	**-2.0**	16.6	3.96	16.5	4.09	16.4	4.23	16.4	4.30	16.4	4.37	15.3	4.23	14.1	3.88
	0.0	**-1.0**	16.8	4.03	16.7	4.17	16.6	4.30	16.6	4.37	16.5	4.44	15.3	4.15	14.1	3.81
	2.0	**1.0**	17.4	4.17	17.3	4.31	17.2	4.45	17.1	4.48	16.5	4.32	15.3	3.98	14.1	3.66
	5.0	**4.0**	18.6	4.39	18.5	4.53	17.6	4.38	17.1	4.22	16.5	4.06	15.3	3.75	14.1	3.44
	7.0	**6.0**	19.4	4.54	18.9	4.52	17.6	4.21	17.1	4.05	16.5	3.90	15.3	3.60	14.1	3.31
	9.0	**7.8**	20.0	4.66	18.9	4.36	17.6	4.06	17.1	3.91	16.5	3.76	15.3	3.47	14.1	3.19
	12.0	**10.6**	20.0	4.41	18.9	4.12	17.6	3.83	17.1	3.69	16.5	3.56	15.3	3.28	14.1	3.01
	15.0	**13.5**	20.0	4.16	18.9	3.88	17.6	3.62	17.1	3.48	16.5	3.35	15.3	3.10	14.1	2.84
16.3 (120%)	-19.3	**-20.0**	11.0	3.29	11.0	3.40	11.0	3.51	11.0	3.57	11.0	3.62	11.0	3.73	11.0	3.84
	-15.0	**-16.0**	12.3	3.48	12.3	3.61	12.2	3.73	12.2	3.79	12.2	3.85	12.2	3.98	12.1	4.10
	-12.0	**-13.0**	13.2	3.66	13.1	3.79	13.1	3.92	13.1	3.98	13.0	4.05	13.0	4.18	12.9	4.31
	-9.0	**-10.0**	14.3	3.78	14.3	3.91	14.2	4.05	14.2	4.11	14.2	4.18	14.1	4.32	12.9	4.42
	-7.0	**-8.0**	15.3	3.88	15.3	4.01	15.2	4.15	15.2	4.22	15.1	4.29	14.1	4.42	12.9	4.21
	-5.0	**-6.0**	15.5	3.94	15.4	4.08	15.4	4.22	15.3	4.28	15.2	4.35	14.1	4.33	12.9	3.98
	-3.0	**-4.0**	15.9	4.01	15.9	4.14	15.8	4.28	15.7	4.35	15.2	4.42	14.1	4.08	12.9	3.75
	-1.0	**-2.0**	16.5	4.11	16.4	4.25	16.3	4.39	15.7	4.36	15.2	4.20	14.1	3.88	12.9	3.57
	0.0	**-1.0**	16.7	4.19	16.6	4.33	16.3	4.44	15.7	4.28	15.2	4.12	14.1	3.81	12.9	3.50
	2.0	**1.0**	17.3	4.34	17.2	4.48	16.3	4.26	15.8	4.11	15.2	3.96	14.1	3.66	12.9	3.36
	5.0	**4.0**	18.4	4.58	17.4	4.31	16.3	4.01	15.8	3.87	15.2	3.73	14.1	3.44	12.9	3.16
	7.0	**6.0**	18.5	4.42	17.4	4.14	16.3	3.86	15.8	3.72	15.2	3.58	14.1	3.31	12.9	3.04
	9.0	**7.8**	18.5	4.26	17.4	3.99	16.3	3.72	15.8	3.58	15.2	3.45	14.1	3.19	12.9	2.93
	12.0	**10.6**	18.5	4.03	17.4	3.77	16.3	3.51	15.8	3.39	15.2	3.26	14.1	3.01	12.9	2.77
	15.0	**13.5**	18.5	3.80	17.4	3.55	16.3	3.31	15.8	3.19	15.2	3.08	14.1	2.84	12.9	2.61
14.9 (110%)	-19.3	**-20.0**	11.0	3.38	11.0	3.50	11.0	3.61	11.0	3.66	11.0	3.72	11.0	3.83	11.0	3.94
	-15.0	**-16.0**	12.3	3.60	12.2	3.72	12.2	3.85	12.2	3.91	12.2	3.97	12.1	4.09	12.0	4.22
	-12.0	**-13.0**	13.1	3.79	13.1	3.92	13.0	4.05	13.0	4.12	13.0	4.18	12.9	4.31	12.0	4.34
	-9.0	**-10.0**	14.3	3.93	14.2	4.06	14.2	4.20	14.1	4.26	14.0	4.33	13.0	4.38	12.0	4.03
	-7.0	**-8.0**	15.3	4.04	15.2	4.17	14.9	4.31	14.5	4.38	14.0	4.45	13.0	4.18	12.0	3.85
	-5.0	**-6.0**	15.4	4.11	15.3	4.25	14.9	4.38	14.5	4.43	14.0	4.27	13.0	3.95	12.0	3.63
	-3.0	**-4.0**	15.8	4.18	15.8	4.32	14.9	4.33	14.5	4.18	14.0	4.02	13.0	3.72	12.0	3.42
	-1.0	**-2.0**	16.4	4.30	15.8	4.42	14.9	4.12	14.5	3.98	14.0	3.83	13.0	3.54	12.0	3.26
	0.0	**-1.0**	16.6	4.38	15.8	4.33	14.9	4.04	14.5	3.90	14.0	3.75	13.0	3.47	12.0	3.19
	2.0	**1.0**	17.0	4.45	16.0	4.16	14.9	3.88	14.5	3.74	14.0	3.61	13.0	3.33	12.0	3.07
	5.0	**4.0**	17.0	4.18	16.0	3.92	14.9	3.65	14.5	3.52	14.0	3.39	13.0	3.14	12.0	2.89
	7.0	**6.0**	17.0	4.02	16.0	3.76	14.9	3.51	14.5	3.38	14.0	3.26	13.0	3.01	12.0	2.77
	9.0	**7.8**	17.0	3.88	16.0	3.63	14.9	3.38	14.5	3.26	14.0	3.14	13.0	2.91	12.0	2.67
	12.0	**10.6**	17.0	3.66	16.0	3.43	14.9	3.20	14.5	3.08	14.0	2.97	13.0	2.75	12.0	2.53
	15.0	**13.5**	17.0	3.45	16.0	3.23	14.9	3.02	14.5	2.91	14.0	2.80	13.0	2.59	12.0	2.38
13.6 (100%)	-19.3	**-20.0**	11.0	3.50	11.0	3.61	11.0	3.72	11.0	3.78	11.0	3.83	11.0	3.94	10.9	4.06
	-15.0	**-16.0**	12.2	3.74	12.2	3.86	12.2	3.99	12.2	4.05	12.1	4.11	11.8	4.23	10.9	4.14
	-12.0	**-13.0**	13.1	3.95	13.0	4.08	13.0	4.21	13.0	4.28	12.7	4.34	11.8	4.27	10.9	3.93
	-9.0	**-10.0**	14.2	4.11	14.1	4.24	13.6	4.37	13.1	4.44	12.7	4.29	11.8	3.97	10.9	3.65
	-7.0	**-8.0**	15.2	4.23	14.5	4.36	13.6	4.40	13.1	4.24	12.7	4.09	11.8	3.79	10.9	3.48
	-5.0	**-6.0**	15.3	4.31	14.5	4.44	13.6	4.15	13.1	4.00	12.7	3.86	11.8	3.57	10.9	3.29
	-3.0	**-4.0**	15.4	4.39	14.5	4.19	13.6	3.91	13.1	3.78	12.7	3.64	11.8	3.37	10.9	3.10
	-1.0	**-2.0**	15.4	4.26	14.5	3.99	13.6	3.72	13.1	3.59	12.7	3.46	11.8	3.20	10.9	2.95
	0.0	**-1.0**	15.4	4.17	14.5	3.91	13.6	3.65	13.1	3.52	12.7	3.39	11.8	3.14	10.9	2.89
	2.0	**1.0**	15.4	4.01	14.5	3.76	13.6	3.51	13.1	3.38	12.7	3.26	11.8	3.02	10.9	2.78
	5.0	**4.0**	15.4	3.77	14.5	3.54	13.6	3.30	13.1	3.18	12.7	3.07	11.8	2.84	10.9	2.61
	7.0	**6.0**	15.4	3.62	14.5	3.40	13.6	3.17	13.1	3.06	12.7	2.95	11.8	2.73	10.9	2.51
	9.0	**7.8**	15.4	3.49	14.5	3.27	13.6	3.06	13.1	2.95	12.7	2.84	11.8	2.63	10.9	2.42
	12.0	**10.6**	15.4	3.30	14.5	3.09	13.6	2.89	13.1	2.79	12.7	2.69	11.8	2.49	10.9	2.29
	15.0	**13.5**	15.4	3.11	14.5	2.92	13.6	2.73	13.1	2.63	12.7	2.53	11.8	2.35	10.9	2.16
12.2 (90%)	-19.3	**-20.0**	11.0	3.64	11.0	3.75	11.0	3.86	11.0	3.92	11.0	3.97	10.6	4.08	9.8	3.96
	-15.0	**-16.0**	12.2	3.91	12.2	4.04	12.1	4.16	11.8	4.22	11.4	4.28	10.6	4.04	9.8	3.72
	-12.0	**-13.0**	12.3	4.15	12.2	4.28	12.2	4.41	11.8	4.29	11.4	4.14	10.6	3.83	9.8	3.53
	-9.0	**-10.0**	13.2	4.32	13.1	4.42	12.2	4.13	11.8	3.98	11.4	3.84	10.6	3.56	9.8	3.28
	-7.0	**-8.0**	13.8	4.46	13.1	4.21	12.2	3.94	11.8	3.80	11.4	3.66	10.6	3.39	9.8	3.13
	-5.0	**-6.0**	13.9	4.24	13.1	3.98	12.2	3.72	11.8	3.59	11.4	3.46	10.6	3.20	9.8	2.95
	-3.0	**-4.0**	13.9	4.00	13.1	3.75	12.2	3.50	11.8	3.38	11.4	3.26	10.6	3.02	9.8	2.78
	-1.0	**-2.0**	13.9	3.80	13.1	3.57	12.2	3.33	11.8	3.22	11.4	3.10	10.6	2.87	9.8	2.65
	0.0	**-1.0**	13.9	3.73	13.1	3.50	12.2	3.27	11.8	3.15	11.4	3.04	10.6	2.82	9.8	2.59
	2.0	**1.0**	13.9	3.58	13.1	3.36	12.2	3.14	11.8	3.03	11.4	2.92	10.6	2.71	9.8	2.49
	5.0	**4.0**	13.9	3.37	13.1	3.16	12.2	2.95	11.8	2.85	11.4	2.75	10.6	2.55	9.8	2.35
	7.0	**6.0**	13.9	3.24	13.1	3.04	12.2	2.84	11.8	2.74	11.4	2.64	10.6	2.45	9.8	2.25
	9.0	**7.8**	13.9	3.12	13.1	2.93	12.2	2.74	11.8	2.64	11.4	2.55	10.6	2.36	9.8	2.17
	12.0	**10.6**	13.9	2.95	13.1	2.77	12.2	2.59	11.8	2.50	11.4	2.41	10.6	2.23	9.8	2.06
	15.0	**13.5**	13.9	2.78	13.1	2.61	12.2	2.44	11.8	2.36	11.4	2.27	10.6	2.11	9.8	1.94

TC : Total Capacity kW.

PI : Power Input kW (Compressor + Outdoor fan motor).

The data is based on the following conditions. Pipe length : 7.5m , Height difference : 0m.

MODEL SELECTION

HEATING CAPACITY

■ MODEL : AJ✳A40LALH

● Capacity : 13.6 kW (4HP)

Total rated cooling capacity of indoor unit	Outdoor temperature		Indoor temperature													
			16°CDB		18°CDB		20°CDB		21°CDB		22°CDB		24°CDB		26°CDB	
	(°CDB)	(°CWB)	TC	IP	TC	IP	TC	IP	TC	IP	TC	IP	TC	IP	TC	IP
10.8 (80%)	-19.3	-20.0	11.0	3.81	11.0	3.92	10.8	4.04	10.5	4.09	10.2	4.11	9.4	3.82	8.7	3.52
	-15.0	-16.0	12.1	4.13	11.6	4.25	10.8	4.14	10.5	4.00	10.2	3.86	9.4	3.58	8.7	3.30
	-12.0	-13.0	12.2	4.39	11.6	4.20	10.8	3.93	10.5	3.80	10.2	3.67	9.4	3.40	8.7	3.14
	-9.0	-10.0	12.3	4.16	11.6	3.91	10.8	3.65	10.5	3.53	10.2	3.40	9.4	3.16	8.7	2.91
	-7.0	-8.0	12.3	3.97	11.6	3.72	10.8	3.48	10.5	3.37	10.2	3.25	9.4	3.01	8.7	2.78
	-5.0	-6.0	12.3	3.74	11.6	3.52	10.8	3.29	10.5	3.18	10.2	3.06	9.4	2.84	8.7	2.62
	-3.0	-4.0	12.3	3.53	11.6	3.31	10.8	3.10	10.5	2.99	10.2	2.89	9.4	2.68	8.7	2.47
	-1.0	-2.0	12.3	3.36	11.6	3.15	10.8	2.95	10.5	2.85	10.2	2.75	9.4	2.55	8.7	2.35
	0.0	-1.0	12.3	3.29	11.6	3.09	10.8	2.89	10.5	2.79	10.2	2.69	9.4	2.50	8.7	2.30
	2.0	1.0	12.3	3.16	11.6	2.97	10.8	2.78	10.5	2.68	10.2	2.59	9.4	2.40	8.7	2.21
	5.0	4.0	12.3	2.98	11.6	2.79	10.8	2.61	10.5	2.52	10.2	2.44	9.4	2.26	8.7	2.08
	7.0	6.0	12.3	2.86	11.6	2.68	10.8	2.51	10.5	2.43	10.2	2.34	9.4	2.17	8.7	2.00
	9.0	7.8	12.3	2.76	11.6	2.59	10.8	2.42	10.5	2.34	10.2	2.26	9.4	2.09	8.7	1.93
	12.0	10.6	12.3	2.61	11.6	2.45	10.8	2.29	10.5	2.21	10.2	2.13	9.4	1.98	8.7	1.83
	15.0	13.5	12.3	2.46	11.6	2.31	10.8	2.16	10.5	2.09	10.2	2.01	9.4	1.87	8.7	1.73
9.5 (70%)	-19.3	-20.0	10.2	4.04	10.2	4.11	9.5	3.85	9.2	3.72	8.9	3.60	8.3	3.34	7.6	3.08
	-15.0	-16.0	10.8	4.11	10.2	3.86	9.5	3.62	9.2	3.50	8.9	3.37	8.3	3.13	7.6	2.89
	-12.0	-13.0	10.8	3.90	10.2	3.67	9.5	3.43	9.2	3.32	8.9	3.20	8.3	2.97	7.6	2.74
	-9.0	-10.0	10.8	3.62	10.2	3.40	9.5	3.19	9.2	3.08	8.9	2.97	8.3	2.76	7.6	2.55
	-7.0	-8.0	10.8	3.45	10.2	3.25	9.5	3.04	9.2	2.94	8.9	2.83	8.3	2.63	7.6	2.43
	-5.0	-6.0	10.8	3.26	10.2	3.06	9.5	2.87	9.2	2.77	8.9	2.67	8.3	2.48	7.6	2.29
	-3.0	-4.0	10.8	3.07	10.2	2.89	9.5	2.70	9.2	2.61	8.9	2.52	8.3	2.34	7.6	2.16
	-1.0	-2.0	10.8	2.92	10.2	2.75	9.5	2.57	9.2	2.49	8.9	2.40	8.3	2.23	7.6	2.06
	0.0	-1.0	10.8	2.87	10.2	2.69	9.5	2.52	9.2	2.44	8.9	2.35	8.3	2.18	7.6	2.02
	2.0	1.0	10.8	2.75	10.2	2.59	9.5	2.42	9.2	2.34	8.9	2.26	8.3	2.10	7.6	1.94
	5.0	4.0	10.8	2.59	10.2	2.44	9.5	2.28	9.2	2.20	8.9	2.13	8.3	1.98	7.6	1.83
	7.0	6.0	10.8	2.49	10.2	2.34	9.5	2.19	9.2	2.12	8.9	2.04	8.3	1.90	7.6	1.75
	9.0	7.8	10.8	2.40	10.2	2.26	9.5	2.11	9.2	2.04	8.9	1.97	8.3	1.83	7.6	1.69
	12.0	10.6	10.8	2.27	10.2	2.13	9.5	2.00	9.2	1.93	8.9	1.87	8.3	1.73	7.6	1.60
	15.0	13.5	10.8	2.14	10.2	2.01	9.5	1.89	9.2	1.82	8.9	1.76	8.3	1.64	7.6	1.51
8.1 (60%)	-19.3	-20.0	9.2	3.74	8.7	3.52	8.1	3.30	7.9	3.19	7.6	3.08	7.1	2.87	6.5	2.65
	-15.0	-16.0	9.2	3.51	8.7	3.30	8.1	3.10	7.9	3.00	7.6	2.89	7.1	2.69	6.5	2.48
	-12.0	-13.0	9.2	3.33	8.7	3.14	8.1	2.94	7.9	2.84	7.6	2.74	7.1	2.55	6.5	2.36
	-9.0	-10.0	9.2	3.09	8.7	2.91	8.1	2.73	7.9	2.64	7.6	2.55	7.1	2.37	6.5	2.19
	-7.0	-8.0	9.2	2.95	8.7	2.78	8.1	2.60	7.9	2.51	7.6	2.43	7.1	2.26	6.5	2.09
	-5.0	-6.0	9.2	2.78	8.7	2.62	8.1	2.45	7.9	2.37	7.6	2.29	7.1	2.13	6.5	1.97
	-3.0	-4.0	9.2	2.63	8.7	2.47	8.1	2.31	7.9	2.24	7.6	2.16	7.1	2.01	6.5	1.86
	-1.0	-2.0	9.2	2.50	8.7	2.35	8.1	2.20	7.9	2.13	7.6	2.06	7.1	1.91	6.5	1.77
	0.0	-1.0	9.2	2.45	8.7	2.30	8.1	2.16	7.9	2.09	7.6	2.02	7.1	1.87	6.5	1.73
	2.0	1.0	9.2	2.35	8.7	2.21	8.1	2.07	7.9	2.01	7.6	1.94	7.1	1.80	6.5	1.67
	5.0	4.0	9.2	2.21	8.7	2.08	8.1	1.95	7.9	1.89	7.6	1.83	7.1	1.70	6.5	1.57
	7.0	6.0	9.2	2.13	8.7	2.00	8.1	1.88	7.9	1.82	7.6	1.75	7.1	1.63	6.5	1.51
	9.0	7.8	9.2	2.05	8.7	1.93	8.1	1.81	7.9	1.75	7.6	1.69	7.1	1.58	6.5	1.46
	12.0	10.6	9.2	1.94	8.7	1.83	8.1	1.71	7.9	1.66	7.6	1.60	7.1	1.49	6.5	1.38
	15.0	13.5	9.2	1.83	8.7	1.73	8.1	1.62	7.9	1.57	7.6	1.51	7.1	1.41	6.5	1.31
6.8 (50%)	-19.3	-20.0	7.7	3.12	7.3	2.94	6.8	2.76	6.6	2.67	6.3	2.58	5.9	2.40	5.4	2.22
	-15.0	-16.0	7.7	2.93	7.3	2.76	6.8	2.59	6.6	2.50	6.3	2.42	5.9	2.25	5.4	2.08
	-12.0	-13.0	7.7	2.78	7.3	2.61	6.8	2.45	6.6	2.37	6.3	2.29	5.9	2.13	5.4	1.97
	-9.0	-10.0	7.7	2.58	7.3	2.43	6.8	2.28	6.6	2.20	6.3	2.13	5.9	1.98	5.4	1.83
	-7.0	-8.0	7.7	2.46	7.3	2.31	6.8	2.17	6.6	2.10	6.3	2.03	5.9	1.89	5.4	1.75
	-5.0	-6.0	7.7	2.32	7.3	2.18	6.8	2.05	6.6	1.98	6.3	1.92	5.9	1.78	5.4	1.65
	-3.0	-4.0	7.7	2.19	7.3	2.06	6.8	1.93	6.6	1.87	6.3	1.81	5.9	1.68	5.4	1.56
	-1.0	-2.0	7.7	2.08	7.3	1.96	6.8	1.84	6.6	1.78	6.3	1.72	5.9	1.60	5.4	1.48
	0.0	-1.0	7.7	2.04	7.3	1.92	6.8	1.80	6.6	1.74	6.3	1.69	5.9	1.57	5.4	1.46
	2.0	1.0	7.7	1.96	7.3	1.85	6.8	1.73	6.6	1.68	6.3	1.62	5.9	1.51	5.4	1.40
	5.0	4.0	7.7	1.85	7.3	1.74	6.8	1.63	6.6	1.58	6.3	1.53	5.9	1.42	5.4	1.32
	7.0	6.0	7.7	1.77	7.3	1.67	6.8	1.57	6.6	1.52	6.3	1.47	5.9	1.37	5.4	1.27
	9.0	7.8	7.7	1.71	7.3	1.61	6.8	1.52	6.6	1.47	6.3	1.42	5.9	1.32	5.4	1.23
	12.0	10.6	7.7	1.62	7.3	1.53	6.8	1.44	6.6	1.39	6.3	1.34	5.9	1.25	5.4	1.16
	15.0	13.5	7.7	1.53	7.3	1.44	6.8	1.36	6.6	1.31	6.3	1.27	5.9	1.19	5.4	1.10

TC : Total Capacity kW.

PI : Power Input kW (Compressor + Outdoor fan motor).

The data is based on the following conditions. Pipe length : 7.5m , Height difference : 0m.

MODEL SELECTION

HEATING CAPACITY

■ MODEL : AJ∗A45LALH

● Capacity : 16.0 kW (5HP)

Total rated cooling capacity of indoor unit	Outdoor temperature		Indoor temperature													
			16°CDB		18°CDB		20°CDB		21°CDB		22°CDB		24°CDB		26°CDB	
	(°CDB)	(°CWB)	TC	IP	TC	IP	TC	IP	TC	IP	TC	IP	TC	IP	TC	IP
20.8 (130%)	-19.3	-20.0	11.0	3.13	11.0	3.24	11.0	3.35	11.0	3.41	11.0	3.47	11.0	3.58	11.0	3.70
	-15.0	-16.0	12.4	3.28	12.3	3.40	12.3	3.53	12.3	3.59	12.3	3.65	12.2	3.78	12.2	3.91
	-12.0	-13.0	13.4	3.41	13.4	3.55	13.3	3.68	13.3	3.75	13.3	3.82	13.2	3.95	13.2	4.08
	-9.0	-10.0	14.6	3.51	14.6	3.64	14.5	3.78	14.5	3.85	14.4	3.92	14.4	4.06	14.3	4.20
	-7.0	-8.0	15.7	3.58	15.6	3.72	15.5	3.86	15.5	3.93	15.5	4.00	15.4	4.15	15.3	4.29
	-5.0	-6.0	15.9	3.63	15.8	3.77	15.7	3.91	15.7	3.98	15.6	4.05	15.6	4.20	15.5	4.34
	-3.0	-4.0	16.3	3.68	16.3	3.82	16.2	3.96	16.1	4.03	16.1	4.10	16.0	4.25	15.9	4.39
	-1.0	-2.0	17.0	3.77	16.9	3.91	16.8	4.05	16.8	4.12	16.7	4.19	16.6	4.34	16.5	4.48
	0.0	-1.0	17.2	3.83	17.1	3.98	17.0	4.12	17.0	4.19	16.9	4.26	16.8	4.41	16.6	4.55
	2.0	1.0	17.8	3.97	17.7	4.11	17.6	4.25	17.6	4.33	17.5	4.40	17.4	4.54	16.6	4.39
	5.0	4.0	19.0	4.17	18.9	4.32	18.8	4.46	18.8	4.54	18.7	4.61	18.0	4.51	16.6	4.14
	7.0	6.0	19.9	4.31	19.8	4.46	19.7	4.60	19.6	4.68	19.4	4.69	18.0	4.33	16.6	3.97
	9.0	7.8	20.6	4.44	20.5	4.59	20.4	4.73	20.1	4.70	19.4	4.53	18.0	4.18	16.6	3.83
	12.0	10.6	21.9	4.64	21.7	4.79	20.8	4.61	20.1	4.45	19.4	4.28	18.0	3.95	16.6	3.62
	15.0	13.5	23.2	4.85	22.2	4.68	20.8	4.35	20.1	4.19	19.4	4.04	18.0	3.72	16.6	3.42
19.2 (120%)	-19.3	-20.0	11.0	3.20	11.0	3.31	11.0	3.42	11.0	3.48	11.0	3.54	11.0	3.65	11.0	3.77
	-15.0	-16.0	12.3	3.36	12.3	3.49	12.3	3.62	12.2	3.68	12.2	3.74	12.2	3.87	12.2	4.00
	-12.0	-13.0	13.4	3.52	13.3	3.65	13.3	3.78	13.2	3.85	13.2	3.92	13.2	4.05	13.1	4.18
	-9.0	-10.0	14.6	3.62	14.5	3.76	14.5	3.89	14.4	3.96	14.4	4.03	14.3	4.17	14.3	4.31
	-7.0	-8.0	15.6	3.70	15.6	3.84	15.5	3.98	15.4	4.05	15.4	4.12	15.3	4.26	15.3	4.41
	-5.0	-6.0	15.8	3.76	15.7	3.90	15.7	4.04	15.6	4.11	15.6	4.18	15.5	4.32	15.4	4.46
	-3.0	-4.0	16.3	3.82	16.2	3.96	16.1	4.10	16.1	4.17	16.0	4.24	15.9	4.38	15.4	4.50
	-1.0	-2.0	16.9	3.91	16.8	4.05	16.7	4.19	16.7	4.26	16.6	4.33	16.5	4.48	15.4	4.28
	0.0	-1.0	17.1	3.98	17.0	4.12	16.9	4.26	16.9	4.33	16.8	4.41	16.6	4.55	15.4	4.20
	2.0	1.0	17.7	4.12	17.6	4.26	17.5	4.41	17.5	4.48	17.4	4.55	16.6	4.39	15.4	4.03
	5.0	4.0	18.9	4.34	18.8	4.48	18.7	4.63	18.6	4.65	17.9	4.48	16.6	4.14	15.4	3.80
	7.0	6.0	19.8	4.49	19.6	4.63	19.2	4.64	18.6	4.47	17.9	4.30	16.6	3.97	15.4	3.65
	9.0	7.8	20.5	4.62	20.4	4.77	19.2	4.47	18.6	4.31	17.9	4.15	16.6	3.83	15.4	3.52
	12.0	10.6	21.7	4.83	20.5	4.54	19.2	4.23	18.6	4.07	17.9	3.92	16.6	3.62	15.4	3.33
	15.0	13.5	21.8	4.58	20.5	4.28	19.2	3.99	18.6	3.84	17.9	3.70	16.6	3.42	15.4	3.14
17.6 (110%)	-19.3	-20.0	11.0	3.28	11.0	3.39	11.0	3.51	11.0	3.57	11.0	3.62	11.0	3.74	10.9	3.85
	-15.0	-16.0	12.3	3.47	12.3	3.59	12.2	3.72	12.2	3.78	12.2	3.85	12.2	3.97	12.1	4.10
	-12.0	-13.0	13.3	3.63	13.3	3.77	13.2	3.90	13.2	3.97	13.2	4.03	13.1	4.17	13.1	4.30
	-9.0	-10.0	14.5	3.75	14.5	3.89	14.4	4.02	14.4	4.09	14.3	4.16	14.3	4.30	14.1	4.44
	-7.0	-8.0	15.6	3.85	15.5	3.99	15.4	4.12	15.4	4.19	15.3	4.26	15.3	4.40	14.1	4.55
	-5.0	-6.0	15.7	3.91	15.7	4.05	15.6	4.19	15.5	4.26	15.5	4.33	15.3	4.47	14.1	4.36
	-3.0	-4.0	16.2	3.97	16.1	4.11	16.0	4.25	16.0	4.32	15.9	4.39	15.3	4.47	14.1	4.11
	-1.0	-2.0	16.8	4.08	16.7	4.22	16.6	4.36	16.6	4.43	16.4	4.50	15.3	4.25	14.1	3.91
	0.0	-1.0	17.0	4.15	16.9	4.29	16.8	4.43	16.8	4.50	16.4	4.51	15.3	4.17	14.1	3.83
	2.0	1.0	17.6	4.30	17.5	4.44	17.4	4.58	17.0	4.50	16.4	4.33	15.3	4.01	14.1	3.68
	5.0	4.0	18.8	4.53	18.7	4.67	17.6	4.39	17.0	4.24	16.4	4.08	15.3	3.77	14.1	3.47
	7.0	6.0	19.6	4.69	18.8	4.52	17.6	4.22	17.0	4.07	16.4	3.92	15.3	3.62	14.1	3.33
	9.0	7.8	19.9	4.66	18.8	4.36	17.6	4.07	17.0	3.92	16.4	3.78	15.3	3.49	14.1	3.21
	12.0	10.6	19.9	4.41	18.8	4.12	17.6	3.85	17.0	3.71	16.4	3.57	15.3	3.30	14.1	3.04
	15.0	13.5	19.9	4.16	18.8	3.89	17.6	3.63	17.0	3.50	16.4	3.37	15.3	3.12	14.1	2.86
16.0 (100%)	-19.3	-20.0	11.0	3.38	11.0	3.50	11.0	3.61	11.0	3.67	11.0	3.72	10.9	3.84	10.9	3.95
	-15.0	-16.0	12.3	3.59	12.2	3.72	12.2	3.84	12.2	3.91	12.2	3.97	12.1	4.10	12.1	4.22
	-12.0	-13.0	13.3	3.78	13.2	3.91	13.2	4.04	13.2	4.11	13.1	4.18	13.1	4.31	12.8	4.44
	-9.0	-10.0	14.5	3.91	14.4	4.04	14.3	4.18	14.3	4.25	14.3	4.32	13.9	4.46	12.8	4.38
	-7.0	-8.0	15.5	4.01	15.4	4.15	15.3	4.29	15.3	4.36	14.9	4.43	13.9	4.54	12.8	4.18
	-5.0	-6.0	15.6	4.09	15.6	4.22	15.5	4.36	15.4	4.43	14.9	4.50	13.9	4.29	12.8	3.94
	-3.0	-4.0	16.1	4.16	16.0	4.30	15.9	4.44	15.5	4.50	14.9	4.37	13.9	4.04	12.8	3.72
	-1.0	-2.0	16.7	4.27	16.6	4.41	16.0	4.47	15.5	4.32	14.9	4.16	13.9	3.85	12.8	3.54
	0.0	-1.0	16.9	4.35	16.8	4.49	16.0	4.38	15.5	4.23	14.9	4.08	13.9	3.77	12.8	3.47
	2.0	1.0	17.5	4.51	17.1	4.51	16.0	4.21	15.5	4.06	14.9	3.92	13.9	3.62	12.8	3.33
	5.0	4.0	18.1	4.54	17.1	4.25	16.0	3.97	15.5	3.83	14.9	3.69	13.9	3.41	12.8	3.14
	7.0	6.0	18.1	4.36	17.1	4.08	16.0	3.81	15.5	3.68	14.9	3.54	13.9	3.28	12.8	3.02
	9.0	7.8	18.1	4.20	17.1	3.94	16.0	3.67	15.5	3.54	14.9	3.42	13.9	3.16	12.8	2.91
	12.0	10.6	18.1	3.97	17.1	3.72	16.0	3.47	15.5	3.35	14.9	3.23	13.9	2.99	12.8	2.75
	15.0	13.5	18.1	3.75	17.1	3.51	16.0	3.28	15.5	3.16	14.9	3.05	13.9	2.82	12.8	2.60
14.4 (90%)	-19.3	-20.0	11.0	3.50	11.0	3.62	11.0	3.73	11.0	3.79	10.9	3.85	10.9	3.96	10.9	4.08
	-15.0	-16.0	12.2	3.74	12.2	3.87	12.2	3.99	12.1	4.06	12.1	4.12	12.1	4.25	11.5	4.37
	-12.0	-13.0	13.2	3.95	13.2	4.08	13.1	4.21	13.1	4.28	13.1	4.35	12.5	4.48	11.5	4.23
	-9.0	-10.0	14.4	4.10	14.3	4.24	14.2	4.37	13.9	4.44	13.4	4.51	12.5	4.27	11.5	3.93
	-7.0	-8.0	15.4	4.22	15.3	4.36	14.4	4.50	13.9	4.56	13.4	4.40	12.5	4.07	11.5	3.75
	-5.0	-6.0	15.5	4.30	15.4	4.44	14.4	4.46	13.9	4.30	13.4	4.15	12.5	3.84	11.5	3.54
	-3.0	-4.0	15.9	4.38	15.4	4.50	14.4	4.20	13.9	4.06	13.4	3.91	12.5	3.62	11.5	3.34
	-1.0	-2.0	16.3	4.51	15.4	4.28	14.4	4.00	13.9	3.86	13.4	3.72	12.5	3.45	11.5	3.18
	0.0	-1.0	16.3	4.48	15.4	4.20	14.4	3.92	13.9	3.79	13.4	3.65	12.5	3.38	11.5	3.11
	2.0	1.0	16.3	4.30	15.4	4.03	14.4	3.77	13.9	3.64	13.4	3.51	12.5	3.25	11.5	2.99
	5.0	4.0	16.3	4.05	15.4	3.80	14.4	3.55	13.9	3.42	13.4	3.30	12.5	3.06	11.5	2.82
	7.0	6.0	16.3	3.89	15.4	3.65	14.4	3.41	13.9	3.29	13.4	3.17	12.5	2.94	11.5	2.71
	9.0	7.8	16.3	3.75	15.4	3.52	14.4	3.29	13.9	3.17	13.4	3.06	12.5	2.83	11.5	2.61
	12.0	10.6	16.3	3.55	15.4	3.33	14.4	3.11	13.9	3.00	13.4	2.89	12.5	2.68	11.5	2.47
	15.0	13.5	16.3	3.35	15.4	3.14	14.4	2.93	13.9	2.83	13.4	2.73	12.5	2.53	11.5	2.33

TC : Total Capacity kW.

PI : Power Input kW (Compressor + Outdoor fan motor).

The data is based on the following conditions. Pipe length : 7.5m , Height difference : 0m.

MODEL SELECTION

HEATING CAPACITY

■ MODEL : AJ∗A45LALH

● Capacity : 16.0 kW (5HP)

Total rated cooling capacity of indoor unit	Outdoor temperature		Indoor temperature													
			16°CDB		18°CDB		20°CDB		21°CDB		22°CDB		24°CDB		26°CDB	
	(°CDB)	(°CWB)	TC	IP	TC	IP	TC	IP	TC	IP	TC	IP	TC	IP	TC	IP
12.8 (80%)	-19.3	**-20.0**	11.0	3.66	11.0	3.77	10.9	3.89	10.9	3.94	10.9	4.00	10.9	4.12	10.2	4.21
	-15.0	**-16.0**	12.2	3.93	12.1	4.06	12.1	4.18	12.1	4.24	11.9	4.31	11.1	4.29	10.2	3.96
	-12.0	**-13.0**	13.1	4.16	13.1	4.30	12.8	4.43	12.4	4.50	11.9	4.39	11.1	4.07	10.2	3.75
	-9.0	**-10.0**	14.3	4.34	13.7	4.47	12.8	4.38	12.4	4.23	11.9	4.08	11.1	3.78	10.2	3.49
	-7.0	**-8.0**	14.5	4.47	13.7	4.47	12.8	4.18	12.4	4.03	11.9	3.89	11.1	3.61	10.2	3.33
	-5.0	**-6.0**	14.5	4.49	13.7	4.22	12.8	3.94	12.4	3.81	11.9	3.67	11.1	3.40	10.2	3.14
	-3.0	**-4.0**	14.5	4.24	13.7	3.98	12.8	3.72	12.4	3.59	11.9	3.46	11.1	3.21	10.2	2.96
	-1.0	**-2.0**	14.5	4.03	13.7	3.78	12.8	3.54	12.4	3.42	11.9	3.30	11.1	3.05	10.2	2.82
	0.0	**-1.0**	14.5	3.95	13.7	3.71	12.8	3.47	12.4	3.35	11.9	3.23	11.1	2.99	10.2	2.76
	2.0	**1.0**	14.5	3.80	13.7	3.56	12.8	3.33	12.4	3.22	11.9	3.10	11.1	2.88	10.2	2.65
	5.0	**4.0**	14.5	3.58	13.7	3.36	12.8	3.14	12.4	3.03	11.9	2.92	11.1	2.71	10.2	2.50
	7.0	**6.0**	14.5	3.44	13.7	3.22	12.8	3.02	12.4	2.91	11.9	2.81	11.1	2.60	10.2	2.40
	9.0	**7.8**	14.5	3.31	13.7	3.11	12.8	2.91	12.4	2.81	11.9	2.71	11.1	2.51	10.2	2.32
	12.0	**10.6**	14.5	3.13	13.7	2.94	12.8	2.75	12.4	2.66	11.9	2.56	11.1	2.38	10.2	2.19
	15.0	**13.5**	14.5	2.96	13.7	2.77	12.8	2.60	12.4	2.51	11.9	2.42	11.1	2.24	10.2	2.07
11.2 (70%)	-19.3	**-20.0**	10.9	3.85	10.9	3.97	10.9	4.08	10.8	4.14	10.5	4.20	9.7	3.99	9.0	3.69
	-15.0	**-16.0**	12.1	4.17	11.9	4.30	11.2	4.33	10.8	4.19	10.5	4.04	9.7	3.75	9.0	3.46
	-12.0	**-13.0**	12.7	4.44	11.9	4.39	11.2	4.11	10.8	3.97	10.5	3.83	9.7	3.56	9.0	3.28
	-9.0	**-10.0**	12.7	4.34	11.9	4.08	11.2	3.82	10.8	3.69	10.5	3.56	9.7	3.30	9.0	3.05
	-7.0	**-8.0**	12.7	4.14	11.9	3.89	11.2	3.64	10.8	3.52	10.5	3.40	9.7	3.15	9.0	2.91
	-5.0	**-6.0**	12.7	3.91	11.9	3.67	11.2	3.44	10.8	3.32	10.5	3.21	9.7	2.97	9.0	2.74
	-3.0	**-4.0**	12.7	3.69	11.9	3.46	11.2	3.24	10.8	3.13	10.5	3.02	9.7	2.80	9.0	2.59
	-1.0	**-2.0**	12.7	3.51	11.9	3.30	11.2	3.08	10.8	2.98	10.5	2.88	9.7	2.67	9.0	2.46
	0.0	**-1.0**	12.7	3.44	11.9	3.23	11.2	3.02	10.8	2.92	10.5	2.82	9.7	2.62	9.0	2.41
	2.0	**1.0**	12.7	3.30	11.9	3.10	11.2	2.91	10.8	2.81	10.5	2.71	9.7	2.51	9.0	2.32
	5.0	**4.0**	12.7	3.11	11.9	2.92	11.2	2.74	10.8	2.64	10.5	2.55	9.7	2.37	9.0	2.19
	7.0	**6.0**	12.7	2.99	11.9	2.81	11.2	2.63	10.8	2.54	10.5	2.45	9.7	2.28	9.0	2.10
	9.0	**7.8**	12.7	2.88	11.9	2.71	11.2	2.54	10.8	2.45	10.5	2.37	9.7	2.20	9.0	2.03
	12.0	**10.6**	12.7	2.73	11.9	2.56	11.2	2.40	10.8	2.32	10.5	2.24	9.7	2.08	9.0	1.92
	15.0	**13.5**	12.7	2.57	11.9	2.42	11.2	2.27	10.8	2.19	10.5	2.11	9.7	1.96	9.0	1.81
9.6 (60%)	-19.3	**-20.0**	10.9	4.12	10.2	4.21	9.6	3.95	9.3	3.82	9.0	3.69	8.3	3.43	7.7	3.17
	-15.0	**-16.0**	10.9	4.21	10.2	3.96	9.6	3.71	9.3	3.58	9.0	3.46	8.3	3.21	7.7	2.97
	-12.0	**-13.0**	10.9	3.99	10.2	3.75	9.6	3.52	9.3	3.40	9.0	3.28	8.3	3.05	7.7	2.82
	-9.0	**-10.0**	10.9	3.71	10.2	3.49	9.6	3.27	9.3	3.16	9.0	3.05	8.3	2.83	7.7	2.62
	-7.0	**-8.0**	10.9	3.54	10.2	3.33	9.6	3.12	9.3	3.01	9.0	2.91	8.3	2.70	7.7	2.50
	-5.0	**-6.0**	10.9	3.34	10.2	3.14	9.6	2.94	9.3	2.84	9.0	2.74	8.3	2.55	7.7	2.36
	-3.0	**-4.0**	10.9	3.15	10.2	2.96	9.6	2.77	9.3	2.68	9.0	2.59	8.3	2.40	7.7	2.22
	-1.0	**-2.0**	10.9	3.00	10.2	2.82	9.6	2.64	9.3	2.55	9.0	2.46	8.3	2.29	7.7	2.12
	0.0	**-1.0**	10.9	2.94	10.2	2.76	9.6	2.59	9.3	2.50	9.0	2.41	8.3	2.24	7.7	2.07
	2.0	**1.0**	10.9	2.82	10.2	2.65	9.6	2.49	9.3	2.40	9.0	2.32	8.3	2.16	7.7	1.99
	5.0	**4.0**	10.9	2.66	10.2	2.50	9.6	2.34	9.3	2.26	9.0	2.19	8.3	2.03	7.7	1.88
	7.0	**6.0**	10.9	2.55	10.2	2.40	9.6	2.25	9.3	2.18	9.0	2.10	8.3	1.95	7.7	1.81
	9.0	**7.8**	10.9	2.46	10.2	2.32	9.6	2.17	9.3	2.10	9.0	2.03	8.3	1.89	7.7	1.74
	12.0	**10.6**	10.9	2.33	10.2	2.19	9.6	2.05	9.3	1.99	9.0	1.92	8.3	1.79	7.7	1.65
	15.0	**13.5**	10.9	2.20	10.2	2.07	9.6	1.94	9.3	1.88	9.0	1.81	8.3	1.69	7.7	1.56
8.0 (50%)	-19.3	**-20.0**	9.1	3.73	8.5	3.51	8.0	3.30	7.7	3.19	7.5	3.08	6.9	2.87	6.4	2.65
	-15.0	**-16.0**	9.1	3.50	8.5	3.30	8.0	3.09	7.7	2.99	7.5	2.89	6.9	2.69	6.4	2.49
	-12.0	**-13.0**	9.1	3.32	8.5	3.13	8.0	2.93	7.7	2.84	7.5	2.74	6.9	2.55	6.4	2.36
	-9.0	**-10.0**	9.1	3.09	8.5	2.90	8.0	2.72	7.7	2.63	7.5	2.55	6.9	2.37	6.4	2.19
	-7.0	**-8.0**	9.1	2.94	8.5	2.77	8.0	2.60	7.7	2.51	7.5	2.43	6.9	2.26	6.4	2.09
	-5.0	**-6.0**	9.1	2.78	8.5	2.61	8.0	2.45	7.7	2.37	7.5	2.29	6.9	2.13	6.4	1.97
	-3.0	**-4.0**	9.1	2.62	8.5	2.47	8.0	2.31	7.7	2.24	7.5	2.16	6.9	2.01	6.4	1.86
	-1.0	**-2.0**	9.1	2.49	8.5	2.35	8.0	2.20	7.7	2.13	7.5	2.06	6.9	1.91	6.4	1.77
	0.0	**-1.0**	9.1	2.44	8.5	2.30	8.0	2.16	7.7	2.09	7.5	2.02	6.9	1.88	6.4	1.74
	2.0	**1.0**	9.1	2.35	8.5	2.21	8.0	2.08	7.7	2.01	7.5	1.94	6.9	1.81	6.4	1.67
	5.0	**4.0**	9.1	2.21	8.5	2.08	8.0	1.96	7.7	1.89	7.5	1.83	6.9	1.70	6.4	1.58
	7.0	**6.0**	9.1	2.13	8.5	2.00	8.0	1.88	7.7	1.82	7.5	1.76	6.9	1.64	6.4	1.52
	9.0	**7.8**	9.1	2.05	8.5	1.93	8.0	1.81	7.7	1.76	7.5	1.70	6.9	1.58	6.4	1.47
	12.0	**10.6**	9.1	1.94	8.5	1.83	8.0	1.72	7.7	1.66	7.5	1.61	6.9	1.50	6.4	1.39
	15.0	**13.5**	9.1	1.84	8.5	1.73	8.0	1.62	7.7	1.57	7.5	1.52	6.9	1.42	6.4	1.31

TC : Total Capacity kW.

PI : Power Input kW (Compressor + Outdoor fan motor).

The data is based on the following conditions. Pipe length : 7.5m , Height difference : 0m.

MODEL SELECTION

HEATING CAPACITY

■ MODEL : AJ∗A54LALH

● Capacity : 18.0 kW (6HP)

Total rated cooling capacity of indoor unit	Outdoor temperature		Indoor temperature													
			16°CDB		18°CDB		20°CDB		21°CDB		22°CDB		24°CDB		26°CDB	
	(°CDB)	(°CWB)	TC	IP	TC	IP	TC	IP	TC	IP	TC	IP	TC	IP	TC	IP
23.4 (130%)	-19.3	**-20.0**	11.3	3.31	11.3	3.43	11.3	3.56	11.3	3.62	11.3	3.68	11.3	3.81	11.3	3.93
	-15.0	**-16.0**	12.7	3.45	12.7	3.59	12.6	3.73	12.6	3.80	12.6	3.87	12.6	4.00	12.5	4.14
	-12.0	**-13.0**	13.8	3.59	13.7	3.73	13.7	3.88	13.7	3.95	13.6	4.03	13.6	4.17	13.6	4.32
	-9.0	**-10.0**	15.0	3.67	15.0	3.82	14.9	3.97	14.9	4.05	14.9	4.13	14.8	4.28	14.8	4.43
	-7.0	**-8.0**	16.1	3.75	16.1	3.90	16.0	4.06	16.0	4.13	15.9	4.21	15.9	4.36	15.8	4.52
	-5.0	**-6.0**	16.3	3.80	16.3	3.95	16.2	4.10	16.2	4.18	16.1	4.26	16.1	4.41	16.0	4.57
	-3.0	**-4.0**	16.8	3.84	16.8	4.00	16.7	4.15	16.6	4.23	16.6	4.30	16.5	4.46	16.5	4.61
	-1.0	**-2.0**	17.7	3.93	17.6	4.08	17.5	4.24	17.5	4.32	17.4	4.39	17.3	4.55	17.3	4.70
	0.0	**-1.0**	17.7	4.00	17.6	4.15	17.6	4.31	17.5	4.38	17.5	4.46	17.4	4.62	17.3	4.77
	2.0	**1.0**	18.4	4.13	18.3	4.29	18.2	4.44	18.2	4.52	18.1	4.60	18.0	4.76	17.9	4.92
	5.0	**4.0**	19.7	4.34	19.6	4.50	19.5	4.66	19.4	4.73	19.4	4.81	19.3	4.97	18.7	4.95
	7.0	**6.0**	20.5	4.48	20.4	4.64	20.3	4.80	20.3	4.88	20.2	4.96	20.1	5.12	18.7	4.75
	9.0	**7.8**	21.3	4.61	21.2	4.77	21.1	4.93	21.1	5.01	21.0	5.09	20.3	5.00	18.7	4.59
	12.0	**10.6**	22.6	4.82	22.5	4.98	22.4	5.14	22.3	5.22	21.8	5.13	20.3	4.73	18.7	4.34
	15.0	**13.5**	24.0	5.03	23.9	5.19	23.4	5.22	22.6	5.03	21.8	4.84	20.3	4.47	18.7	4.10
21.6 (120%)	-19.3	**-20.0**	11.3	3.38	11.3	3.50	11.3	3.63	11.3	3.69	11.3	3.75	11.3	3.88	11.3	4.00
	-15.0	**-16.0**	12.7	3.54	12.6	3.68	12.6	3.82	12.6	3.88	12.6	3.95	12.6	4.09	12.5	4.23
	-12.0	**-13.0**	13.7	3.69	13.7	3.83	13.7	3.98	13.6	4.05	13.6	4.13	13.6	4.27	13.5	4.42
	-9.0	**-10.0**	15.0	3.79	15.0	3.94	14.9	4.09	14.9	4.16	14.8	4.24	14.8	4.39	14.7	4.54
	-7.0	**-8.0**	16.1	3.87	16.0	4.02	16.0	4.18	15.9	4.25	15.9	4.33	15.8	4.48	15.8	4.64
	-5.0	**-6.0**	16.3	3.92	16.2	4.08	16.1	4.23	16.1	4.31	16.1	4.38	16.0	4.54	15.9	4.69
	-3.0	**-4.0**	16.8	3.98	16.7	4.13	16.6	4.28	16.6	4.36	16.5	4.44	16.5	4.59	16.4	4.74
	-1.0	**-2.0**	17.6	4.07	17.5	4.22	17.4	4.38	17.4	4.46	17.3	4.53	17.3	4.69	17.2	4.84
	0.0	**-1.0**	17.6	4.14	17.6	4.30	17.5	4.45	17.4	4.53	17.4	4.61	17.3	4.76	17.2	4.92
	2.0	**1.0**	18.3	4.28	18.2	4.44	18.1	4.60	18.1	4.67	18.0	4.75	17.9	4.91	17.3	4.82
	5.0	**4.0**	19.6	4.50	19.5	4.66	19.4	4.82	19.3	4.90	19.3	4.98	18.7	4.95	17.3	4.54
	7.0	**6.0**	20.4	4.65	20.3	4.81	20.2	4.97	20.2	5.05	20.1	5.13	18.7	4.75	17.3	4.37
	9.0	**7.8**	21.2	4.79	21.1	4.95	21.0	5.11	20.9	5.16	20.2	4.97	18.7	4.59	17.3	4.21
	12.0	**10.6**	22.5	5.01	22.4	5.17	21.6	5.07	20.9	4.88	20.2	4.70	18.7	4.34	17.3	3.99
	15.0	**13.5**	23.8	5.23	23.0	5.13	21.6	4.78	20.9	4.61	20.2	4.44	18.7	4.10	17.3	3.77
19.8 (110%)	-19.3	**-20.0**	11.3	3.46	11.3	3.59	11.3	3.71	11.3	3.77	11.3	3.84	11.3	3.96	11.3	4.09
	-15.0	**-16.0**	12.6	3.64	12.6	3.78	12.6	3.92	12.6	3.99	12.6	4.06	12.5	4.19	12.5	4.33
	-12.0	**-13.0**	13.7	3.81	13.7	3.95	13.6	4.10	13.6	4.17	13.6	4.25	13.5	4.39	13.5	4.54
	-9.0	**-10.0**	15.0	3.92	14.9	4.07	14.9	4.22	14.8	4.29	14.8	4.37	14.7	4.52	14.7	4.67
	-7.0	**-8.0**	16.0	4.01	16.0	4.16	15.9	4.32	15.9	4.39	15.8	4.47	15.8	4.62	15.7	4.78
	-5.0	**-6.0**	16.2	4.07	16.2	4.22	16.1	4.38	16.0	4.45	16.0	4.53	15.9	4.68	15.8	4.84
	-3.0	**-4.0**	16.7	4.13	16.6	4.29	16.5	4.44	16.5	4.51	16.5	4.59	16.4	4.74	15.8	4.89
	-1.0	**-2.0**	17.5	4.24	17.4	4.39	17.3	4.54	17.3	4.62	17.3	4.70	17.2	4.85	15.8	4.66
	0.0	**-1.0**	17.6	4.31	17.5	4.46	17.4	4.62	17.4	4.70	17.3	4.77	17.2	4.93	15.8	4.57
	2.0	**1.0**	18.2	4.46	18.1	4.62	18.0	4.77	18.0	4.85	17.9	4.93	17.2	4.78	15.8	4.40
	5.0	**4.0**	19.4	4.70	19.3	4.85	19.3	5.01	19.1	5.06	18.5	4.88	17.2	4.51	15.8	4.15
	7.0	**6.0**	20.3	4.86	20.2	5.02	19.8	5.05	19.1	4.87	18.5	4.69	17.2	4.34	15.8	3.99
	9.0	**7.8**	21.1	5.00	21.0	5.16	19.8	4.87	19.1	4.70	18.5	4.53	17.2	4.18	15.8	3.85
	12.0	**10.6**	22.3	5.23	21.1	4.94	19.8	4.61	19.1	4.45	18.5	4.28	17.2	3.96	15.8	3.64
	15.0	**13.5**	22.4	4.99	21.1	4.67	19.8	4.35	19.1	4.20	18.5	4.05	17.2	3.74	15.8	3.44
18.0 (100%)	-19.3	**-20.0**	11.3	3.56	11.3	3.69	11.3	3.81	11.3	3.87	11.3	3.94	11.3	4.06	11.3	4.19
	-15.0	**-16.0**	12.6	3.77	12.6	3.91	12.6	4.04	12.6	4.11	12.5	4.18	12.5	4.32	12.5	4.46
	-12.0	**-13.0**	13.7	3.95	13.6	4.10	13.6	4.24	13.6	4.31	13.5	4.39	13.5	4.53	13.5	4.68
	-9.0	**-10.0**	14.9	4.08	14.8	4.23	14.8	4.38	14.8	4.45	14.7	4.53	14.7	4.68	14.4	4.83
	-7.0	**-8.0**	16.0	4.18	15.9	4.33	15.8	4.49	15.8	4.56	15.8	4.64	15.6	4.79	14.4	4.94
	-5.0	**-6.0**	16.1	4.25	16.1	4.40	16.0	4.55	16.0	4.63	15.9	4.71	15.6	4.86	14.4	4.70
	-3.0	**-4.0**	16.6	4.32	16.5	4.47	16.5	4.62	16.4	4.70	16.4	4.78	15.6	4.82	14.4	4.43
	-1.0	**-2.0**	17.4	4.43	17.3	4.59	17.2	4.74	17.2	4.81	16.8	4.89	15.6	4.59	14.4	4.22
	0.0	**-1.0**	17.5	4.51	17.4	4.67	17.3	4.82	17.2	4.90	16.8	4.86	15.6	4.50	14.4	4.14
	2.0	**1.0**	18.1	4.68	18.0	4.83	17.9	4.99	17.4	4.85	16.8	4.68	15.6	4.33	14.4	3.98
	5.0	**4.0**	19.3	4.93	19.2	5.08	18.0	4.74	17.4	4.58	16.8	4.41	15.6	4.08	14.4	3.76
	7.0	**6.0**	20.1	5.10	19.2	4.88	18.0	4.56	17.4	4.40	16.8	4.24	15.6	3.92	14.4	3.61
	9.0	**7.8**	20.4	5.03	19.2	4.71	18.0	4.40	17.4	4.25	16.8	4.09	15.6	3.79	14.4	3.48
	12.0	**10.6**	20.4	4.76	19.2	4.46	18.0	4.16	17.4	4.02	16.8	3.87	15.6	3.58	14.4	3.30
	15.0	**13.5**	20.4	4.50	19.2	4.21	18.0	3.93	17.4	3.80	16.8	3.66	15.6	3.39	14.4	3.12
16.2 (90%)	-19.3	**-20.0**	11.3	3.69	11.3	3.81	11.3	3.94	11.3	4.00	11.3	4.06	11.3	4.19	11.3	4.31
	-15.0	**-16.0**	12.6	3.92	12.6	4.06	12.5	4.19	12.5	4.26	12.5	4.33	12.5	4.47	12.4	4.61
	-12.0	**-13.0**	13.6	4.12	13.6	4.27	13.5	4.41	13.5	4.49	13.5	4.56	13.5	4.71	13.0	4.85
	-9.0	**-10.0**	14.8	4.27	14.8	4.42	14.7	4.57	14.7	4.64	14.7	4.72	14.0	4.87	13.0	4.67
	-7.0	**-8.0**	15.9	4.39	15.8	4.54	15.7	4.69	15.7	4.77	15.1	4.84	14.0	4.84	13.0	4.46
	-5.0	**-6.0**	16.0	4.47	16.0	4.62	15.9	4.77	15.7	4.85	15.1	4.92	14.0	4.58	13.0	4.22
	-3.0	**-4.0**	16.5	4.54	16.4	4.70	16.2	4.85	15.7	4.84	15.1	4.66	14.0	4.32	13.0	3.98
	-1.0	**-2.0**	17.3	4.67	17.2	4.82	16.2	4.77	15.7	4.61	15.1	4.44	14.0	4.11	13.0	3.79
	0.0	**-1.0**	17.3	4.76	17.2	4.91	16.2	4.68	15.7	4.52	15.1	4.36	14.0	4.04	13.0	3.72
	2.0	**1.0**	17.9	4.93	17.3	4.82	16.2	4.50	15.7	4.35	15.1	4.19	14.0	3.88	13.0	3.57
	5.0	**4.0**	18.4	4.84	17.3	4.54	16.2	4.24	15.7	4.10	15.1	3.95	14.0	3.66	13.0	3.37
	7.0	**6.0**	18.4	4.66	17.3	4.37	16.2	4.08	15.7	3.94	15.1	3.80	14.0	3.52	13.0	3.24
	9.0	**7.8**	18.4	4.49	17.3	4.21	16.2	3.94	15.7	3.80	15.1	3.67	14.0	3.40	13.0	3.13
	12.0	**10.6**	18.4	4.25	17.3	3.99	16.2	3.73	15.7	3.60	15.1	3.47	14.0	3.21	13.0	2.96
	15.0	**13.5**	18.4	4.02	17.3	3.77	16.2	3.52	15.7	3.40	15.1	3.28	14.0	3.04	13.0	2.80

TC : Total Capacity kW.

PI : Power Input kW (Compressor + Outdoor fan motor).

The data is based on the following conditions. Pipe length : 7.5m , Height difference : 0m.

MODEL SELECTION

HEATING CAPACITY

■ MODEL : AJ✳A54LALH

● Capacity : 18.0 kW (6HP)

Total rated cooling capacity of indoor unit	Outdoor temperature		Indoor temperature													
			16°CDB		18°CDB		20°CDB		21°CDB		22°CDB		24°CDB		26°CDB	
	(°CDB)	(°CWB)	TC	IP	TC	IP	TC	IP	TC	IP	TC	IP	TC	IP	TC	IP
14.4 (80%)	-19.3	**-20.0**	11.3	3.84	11.3	3.96	11.3	4.09	11.3	4.15	11.3	4.21	11.3	4.34	11.2	4.47
	-15.0	**-16.0**	12.6	4.11	12.5	4.24	12.5	4.38	12.5	4.45	12.5	4.52	12.4	4.66	11.5	4.69
	-12.0	**-13.0**	13.6	4.34	13.5	4.48	13.5	4.63	13.5	4.70	13.4	4.77	12.5	4.83	11.5	4.46
	-9.0	**-10.0**	14.7	4.51	14.7	4.66	14.4	4.80	13.9	4.88	13.4	4.85	12.5	4.50	11.5	4.15
	-7.0	**-8.0**	15.8	4.64	15.4	4.79	14.4	4.94	13.9	4.80	13.4	4.63	12.5	4.29	11.5	3.96
	-5.0	**-6.0**	15.9	4.73	15.4	4.88	14.4	4.70	13.9	4.54	13.4	4.38	12.5	4.06	11.5	3.74
	-3.0	**-4.0**	16.3	4.82	15.4	4.74	14.4	4.43	13.9	4.28	13.4	4.13	12.5	3.83	11.5	3.53
	-1.0	**-2.0**	16.3	4.81	15.4	4.52	14.4	4.22	13.9	4.08	13.4	3.93	12.5	3.65	11.5	3.36
	0.0	**-1.0**	16.3	4.72	15.4	4.43	14.4	4.14	13.9	4.00	13.4	3.86	12.5	3.58	11.5	3.30
	2.0	**1.0**	16.3	4.54	15.4	4.26	14.4	3.98	13.9	3.85	13.4	3.71	12.5	3.44	11.5	3.17
	5.0	**4.0**	16.3	4.28	15.4	4.02	14.4	3.76	13.9	3.63	13.4	3.50	12.5	3.24	11.5	2.99
	7.0	**6.0**	16.3	4.11	15.4	3.86	14.4	3.61	13.9	3.49	13.4	3.36	12.5	3.12	11.5	2.88
	9.0	**7.8**	16.3	3.97	15.4	3.73	14.4	3.48	13.9	3.37	13.4	3.25	12.5	3.01	11.5	2.78
	12.0	**10.6**	16.3	3.76	15.4	3.53	14.4	3.30	13.9	3.19	13.4	3.07	12.5	2.85	11.5	2.63
	15.0	**13.5**	16.3	3.55	15.4	3.33	14.4	3.12	13.9	3.01	13.4	2.90	12.5	2.69	11.5	2.49
12.6 (70%)	-19.3	**-20.0**	11.3	4.04	11.3	4.16	11.3	4.29	11.3	4.35	11.2	4.41	10.9	4.54	10.1	4.37
	-15.0	**-16.0**	12.5	4.35	12.5	4.49	12.4	4.62	12.2	4.69	11.8	4.76	10.9	4.45	10.1	4.10
	-12.0	**-13.0**	13.5	4.61	13.4	4.76	12.6	4.88	12.2	4.72	11.8	4.55	10.9	4.23	10.1	3.90
	-9.0	**-10.0**	14.3	4.81	13.4	4.85	12.6	4.54	12.2	4.39	11.8	4.23	10.9	3.93	10.1	3.63
	-7.0	**-8.0**	14.3	4.93	13.4	4.63	12.6	4.34	12.2	4.19	11.8	4.04	10.9	3.75	10.1	3.46
	-5.0	**-6.0**	14.3	4.66	13.4	4.38	12.6	4.10	12.2	3.96	11.8	3.82	10.9	3.54	10.1	3.27
	-3.0	**-4.0**	14.3	4.40	13.4	4.13	12.6	3.87	12.2	3.73	11.8	3.60	10.9	3.35	10.1	3.09
	-1.0	**-2.0**	14.3	4.19	13.4	3.93	12.6	3.68	12.2	3.56	11.8	3.43	10.9	3.19	10.1	2.94
	0.0	**-1.0**	14.3	4.11	13.4	3.86	12.6	3.61	12.2	3.49	11.8	3.37	10.9	3.13	10.1	2.89
	2.0	**1.0**	14.3	3.95	13.4	3.71	12.6	3.47	12.2	3.36	11.8	3.24	10.9	3.01	10.1	2.78
	5.0	**4.0**	14.3	3.72	13.4	3.50	12.6	3.27	12.2	3.16	11.8	3.05	10.9	2.84	10.1	2.62
	7.0	**6.0**	14.3	3.58	13.4	3.36	12.6	3.15	12.2	3.04	11.8	2.94	10.9	2.73	10.1	2.52
	9.0	**7.8**	14.3	3.46	13.4	3.25	12.6	3.04	12.2	2.94	11.8	2.84	10.9	2.63	10.1	2.43
	12.0	**10.6**	14.3	3.27	13.4	3.07	12.6	2.88	12.2	2.78	11.8	2.69	10.9	2.49	10.1	2.30
	15.0	**13.5**	14.3	3.09	13.4	2.90	12.6	2.72	12.2	2.63	11.8	2.54	10.9	2.36	10.1	2.18
10.8 (60%)	-19.3	**-20.0**	12.2	4.30	10.6	4.43	10.8	4.55	10.4	4.52	10.1	4.37	9.4	4.06	8.6	3.75
	-15.0	**-16.0**	12.2	4.67	11.5	4.69	10.8	4.40	10.4	4.25	10.1	4.10	9.4	3.81	8.6	3.52
	-12.0	**-13.0**	12.2	4.74	11.5	4.46	10.8	4.18	10.4	4.04	10.1	3.90	9.4	3.62	8.6	3.35
	-9.0	**-10.0**	12.2	4.41	11.5	4.15	10.8	3.89	10.4	3.76	10.1	3.63	9.4	3.37	8.6	3.11
	-7.0	**-8.0**	12.2	4.21	11.5	3.96	10.8	3.71	10.4	3.59	10.1	3.46	9.4	3.22	8.6	2.97
	-5.0	**-6.0**	12.2	3.98	11.5	3.74	10.8	3.50	10.4	3.39	10.1	3.27	9.4	3.04	8.6	2.81
	-3.0	**-4.0**	12.2	3.75	11.5	3.53	10.8	3.31	10.4	3.20	10.1	3.09	9.4	2.87	8.6	2.65
	-1.0	**-2.0**	12.2	3.58	11.5	3.36	10.8	3.15	10.4	3.05	10.1	2.94	9.4	2.73	8.6	2.53
	0.0	**-1.0**	12.2	3.51	11.5	3.30	10.8	3.09	10.4	2.99	10.1	2.89	9.4	2.68	8.6	2.48
	2.0	**1.0**	12.2	3.37	11.5	3.17	10.8	2.97	10.4	2.87	10.1	2.78	9.4	2.58	8.6	2.39
	5.0	**4.0**	12.2	3.18	11.5	2.99	10.8	2.80	10.4	2.71	10.1	2.62	9.4	2.43	8.6	2.25
	7.0	**6.0**	12.2	3.06	11.5	2.88	10.8	2.70	10.4	2.61	10.1	2.52	9.4	2.34	8.6	2.17
	9.0	**7.8**	12.2	2.95	11.5	2.78	10.8	2.60	10.4	2.52	10.1	2.43	9.4	2.26	8.6	2.09
	12.0	**10.6**	12.2	2.80	11.5	2.63	10.8	2.47	10.4	2.39	10.1	2.30	9.4	2.14	8.6	1.98
	15.0	**13.5**	12.2	2.64	11.5	2.49	10.8	2.33	10.4	2.26	10.1	2.18	9.4	2.03	8.6	1.88
9.0 (50%)	-19.3	**-20.0**	10.2	4.42	9.6	4.16	9.0	3.90	8.7	3.78	8.4	3.65	7.8	3.40	7.2	3.14
	-15.0	**-16.0**	10.2	4.15	9.6	3.91	9.0	3.67	8.7	3.55	8.4	3.43	7.8	3.19	7.2	2.95
	-12.0	**-13.0**	10.2	3.95	9.6	3.72	9.0	3.49	8.7	3.37	8.4	3.26	7.8	3.03	7.2	2.80
	-9.0	**-10.0**	10.2	3.67	9.6	3.46	9.0	3.24	8.7	3.14	8.4	3.03	7.8	2.82	7.2	2.61
	-7.0	**-8.0**	10.2	3.50	9.6	3.30	9.0	3.10	8.7	2.99	8.4	2.89	7.8	2.69	7.2	2.49
	-5.0	**-6.0**	10.2	3.31	9.6	3.12	9.0	2.92	8.7	2.83	8.4	2.73	7.8	2.54	7.2	2.35
	-3.0	**-4.0**	10.2	3.12	9.6	2.94	9.0	2.76	8.7	2.67	8.4	2.58	7.8	2.40	7.2	2.22
	-1.0	**-2.0**	10.2	2.98	9.6	2.80	9.0	2.63	8.7	2.54	8.4	2.46	7.8	2.29	7.2	2.12
	0.0	**-1.0**	10.2	2.92	9.6	2.75	9.0	2.58	8.7	2.50	8.4	2.41	7.8	2.24	7.2	2.08
	2.0	**1.0**	10.2	2.81	9.6	2.64	9.0	2.48	8.7	2.40	8.4	2.32	7.8	2.16	7.2	2.00
	5.0	**4.0**	10.2	2.65	9.6	2.50	9.0	2.34	8.7	2.27	8.4	2.19	7.8	2.04	7.2	1.89
	7.0	**6.0**	10.2	2.55	9.6	2.40	9.0	2.25	8.7	2.18	8.4	2.11	7.8	1.96	7.2	1.82
	9.0	**7.8**	10.2	2.46	9.6	2.32	9.0	2.18	8.7	2.11	8.4	2.04	7.8	1.90	7.2	1.76
	12.0	**10.6**	10.2	2.33	9.6	2.20	9.0	2.06	8.7	2.00	8.4	1.93	7.8	1.80	7.2	1.67
	15.0	**13.5**	10.2	2.21	9.6	2.08	9.0	1.95	8.7	1.89	8.4	1.83	7.8	1.70	7.2	1.58

TC : Total Capacity kW.

PI : Power Input kW (Compressor + Outdoor fan motor).

The data is based on the following conditions. Pipe length : 7.5m , Height difference : 0m.

MODEL SELECTION

6. CAPACITY COMPENSATION COEFFICIENT

■ COMPENSATION COEFFICIENT OF PIPE LENGTH

The tables give the compensation coefficient of pipe length owing to installation position (pipe length, height difference). Pipe length and height difference are the length and the height difference between outdoor unit and indoor unit.

● Cooling

			Pipe length (m)												
			5	7.5	20	30	40	50	60	70	80	90	100	110	120
Height difference H (m)	outdoor unit is upper than Indoor unit.	30	-	-	-	0.942	0.921	0.899	0.877	0.855	0.833	0.812	0.790	0.768	0.746
		20	-	-	0.969	0.947	0.925	0.903	0.881	0.860	0.838	0.816	0.794	0.772	0.750
		7.5	-	0.998	0.972	0.950	0.928	0.906	0.884	0.862	0.840	0.818	0.796	0.774	0.752
		5	0.999	0.999	0.973	0.951	0.929	0.907	0.885	0.863	0.841	0.819	0.797	0.775	0.753
		0	1.000	1.000	0.974	0.952	0.930	0.908	0.886	0.864	0.842	0.820	0.798	0.776	0.754
	outdoor unit is under than Indoor unit	-5	1.000	1.000	0.974	0.952	0.930	0.908	0.886	0.864	0.842	0.820	0.798	0.776	0.754
		-7.5	-	1.000	0.974	0.952	0.930	0.908	0.886	0.864	0.842	0.820	0.798	0.776	0.754
		-20	-	-	0.974	0.952	0.930	0.908	0.886	0.864	0.842	0.820	0.798	0.776	0.754
		-30	-	-	-	0.952	0.930	0.908	0.886	0.864	0.842	0.820	0.798	0.776	0.754

● Heating

			Pipe length (m)												
			5	7.5	20	30	40	50	60	70	80	90	100	110	120
Height difference H (m)	outdoor unit is upper than Indoor unit.	30	-	-	-	0.994	0.991	0.989	0.987	0.984	0.981	0.978	0.975	0.972	0.970
		20	-	-	0.997	0.994	0.991	0.989	0.987	0.984	0.981	0.978	0.975	0.972	0.970
		7.5	-	1.000	0.997	0.994	0.991	0.989	0.987	0.984	0.981	0.978	0.975	0.972	0.970
		5	1.000	1.000	0.997	0.994	0.991	0.989	0.987	0.984	0.981	0.978	0.975	0.972	0.970
		0	1.000	1.000	0.997	0.994	0.991	0.989	0.987	0.984	0.981	0.978	0.975	0.972	0.970
	outdoor unit is under than Indoor unit	-5	1.000	1.000	0.997	0.994	0.991	0.989	0.987	0.984	0.981	0.978	0.975	0.972	0.970
		-7.5	-	1.000	0.997	0.994	0.991	0.989	0.987	0.984	0.981	0.978	0.975	0.972	0.970
		-20	-	-	0.997	0.994	0.991	0.989	0.987	0.984	0.981	0.978	0.975	0.972	0.970
		-30	-	-	-	0.994	0.991	0.989	0.987	0.984	0.981	0.978	0.975	0.972	0.970

■ COMPENSATION COEFFICIENT OF FROSTING / DEFROSTING (HEATING OPERATION)

To take the effects of accumulated frost and defrosting operation on heating capacity into consideration, the capacity of outdoor unit should be corrected by compensation coefficient shown in the table below.

Outdoor temperature (°CDB / °CWB)	-15 / -16	-9 / -10	-7 / -8	-5 / -6	-3 / -4	0 / -1	2 / 1	5 / 4	7 / 6
Compensation coefficient	0.96	0.94	0.91	0.88	0.85	0.83	0.85	0.90	1.00

7. CAPACITY TABLE COOLING (INDOOR UNIT)

7-1. COMPACT CASSETTE TYPE

COOLING CAPACITY

■ MODEL : AUXB04GALH

Outdoor temperature	Indoor temperature															
	20°CDB / 15 °CWB		23°CDB / 16 °CWB		24°CDB / 17 °CWB		26°CDB / 18 °CWB		27°CDB / 19 °CWB		28°CDB / 20 °CWB		30°CDB / 22 °CWB		32°CDB / 23 °CWB	
(°CDB)	TC	SHC	TC	SHC	TC	SHC	TC	SHC	TC	SHC	TC	SHC	TC	SHC	TC	SHC
10	0.7	0.6	0.8	0.7	0.9	0.8	1.0	0.9	1.1	1.0	1.2	1.0	1.4	1.0	1.5	1.1
15	0.7	0.6	0.8	0.7	0.9	0.8	1.0	0.9	1.1	1.0	1.2	1.0	1.4	1.0	1.5	1.1
21	0.7	0.6	0.8	0.7	0.9	0.8	1.0	0.9	1.1	1.0	1.2	1.0	1.4	1.0	1.4	1.0
23	0.7	0.6	0.8	0.7	0.9	0.8	1.0	0.9	1.1	1.0	1.2	1.0	1.4	1.0	1.4	1.0
25	0.7	0.6	0.8	0.7	0.9	0.8	1.0	0.9	1.1	1.0	1.2	1.0	1.4	1.0	1.4	1.0
27	0.7	0.6	0.8	0.7	0.9	0.8	1.0	0.9	1.1	1.0	1.2	1.0	1.3	0.9	1.4	1.0
30	0.7	0.6	0.8	0.7	0.9	0.8	1.0	0.9	1.1	1.0	1.2	1.0	1.3	0.9	1.3	0.9
33	0.7	0.6	0.8	0.7	0.9	0.8	1.0	0.9	1.1	1.0	1.2	1.0	1.3	0.9	1.3	0.9
35	0.7	0.6	0.8	0.7	0.9	0.8	1.0	0.9	1.1	1.0	1.2	1.0	1.3	0.9	1.3	0.9
37	0.7	0.6	0.8	0.7	0.9	0.8	1.0	0.9	1.1	1.0	1.2	1.0	1.2	0.9	1.3	0.9
40	0.7	0.6	0.8	0.7	0.9	0.8	1.0	0.9	1.1	1.0	1.2	1.0	1.2	0.9	1.2	0.9
43	0.7	0.6	0.8	0.7	0.9	0.8	1.0	0.9	1.1	1.0	1.1	0.9	1.2	0.9	1.2	0.9
46	0.7	0.6	0.8	0.7	0.9	0.8	1.0	0.9	1.1	1.0	1.1	0.9	1.1	0.8	1.2	0.9

■ MODEL : AUXB07GALH

Outdoor temperature	Indoor temperature															
	20°CDB / 15 °CWB		23°CDB / 16 °CWB		24°CDB / 17 °CWB		26°CDB / 18 °CWB		27°CDB / 19 °CWB		28°CDB / 20 °CWB		30°CDB / 22 °CWB		32°CDB / 23 °CWB	
(°CDB)	TC	SHC	TC	SHC	TC	SHC	TC	SHC	TC	SHC	TC	SHC	TC	SHC	TC	SHC
10	1.4	1.2	1.6	1.5	1.8	1.6	2.0	1.7	2.2	1.8	2.4	1.8	2.8	1.9	2.9	2.0
15	1.4	1.2	1.6	1.5	1.8	1.6	2.0	1.7	2.2	1.8	2.4	1.8	2.8	1.9	2.9	2.0
21	1.4	1.2	1.6	1.5	1.8	1.6	2.0	1.7	2.2	1.8	2.4	1.8	2.8	1.9	2.9	2.0
23	1.4	1.2	1.6	1.5	1.8	1.6	2.0	1.7	2.2	1.8	2.4	1.8	2.8	1.9	2.8	2.0
25	1.4	1.2	1.6	1.5	1.8	1.6	2.0	1.7	2.2	1.8	2.4	1.8	2.7	1.9	2.8	2.0
27	1.4	1.2	1.6	1.5	1.8	1.6	2.0	1.7	2.2	1.8	2.4	1.8	2.7	1.9	2.7	2.0
30	1.4	1.2	1.6	1.5	1.8	1.6	2.0	1.7	2.2	1.8	2.4	1.8	2.6	1.8	2.7	1.9
33	1.4	1.2	1.6	1.5	1.8	1.6	2.0	1.7	2.2	1.8	2.4	1.8	2.6	1.8	2.6	1.9
35	1.4	1.2	1.6	1.5	1.8	1.6	2.0	1.7	2.2	1.8	2.4	1.8	2.5	1.8	2.6	1.9
37	1.4	1.2	1.6	1.5	1.8	1.6	2.0	1.7	2.2	1.8	2.4	1.8	2.5	1.8	2.5	1.9
40	1.4	1.2	1.6	1.5	1.8	1.6	2.0	1.7	2.2	1.8	2.3	1.8	2.4	1.8	2.5	1.9
43	1.4	1.2	1.6	1.5	1.8	1.6	2.0	1.7	2.2	1.8	2.3	1.8	2.4	1.8	2.4	1.9
46	1.4	1.2	1.6	1.5	1.8	1.6	2.0	1.7	2.2	1.8	2.2	1.8	2.3	1.7	2.3	1.8

■ MODEL : AUXB09GALH

Outdoor temperature	Indoor temperature															
	20°CDB / 15 °CWB		23°CDB / 16 °CWB		24°CDB / 17 °CWB		26°CDB / 18 °CWB		27°CDB / 19 °CWB		28°CDB / 20 °CWB		30°CDB / 22 °CWB		32°CDB / 23 °CWB	
(°CDB)	TC	SHC	TC	SHC	TC	SHC	TC	SHC	TC	SHC	TC	SHC	TC	SHC	TC	SHC
10	1.8	1.4	2.1	1.7	2.3	1.8	2.6	2.0	2.8	2.1	3.0	2.1	3.5	2.2	3.8	2.4
15	1.8	1.4	2.1	1.7	2.3	1.8	2.6	2.0	2.8	2.1	3.0	2.1	3.5	2.2	3.8	2.4
21	1.8	1.4	2.1	1.7	2.3	1.8	2.6	2.0	2.8	2.1	3.0	2.1	3.5	2.2	3.7	2.3
23	1.8	1.4	2.1	1.7	2.3	1.8	2.6	2.0	2.8	2.1	3.0	2.1	3.5	2.2	3.6	2.3
25	1.8	1.4	2.1	1.7	2.3	1.8	2.6	2.0	2.8	2.1	3.0	2.1	3.5	2.2	3.5	2.3
27	1.8	1.4	2.1	1.7	2.3	1.8	2.6	2.0	2.8	2.1	3.0	2.1	3.4	2.2	3.5	2.3
30	1.8	1.4	2.1	1.7	2.3	1.8	2.6	2.0	2.8	2.1	3.0	2.1	3.4	2.1	3.4	2.2
33	1.8	1.4	2.1	1.7	2.3	1.8	2.6	2.0	2.8	2.1	3.0	2.1	3.3	2.1	3.3	2.2
35	1.8	1.4	2.1	1.7	2.3	1.8	2.6	2.0	2.8	2.1	3.0	2.1	3.2	2.1	3.3	2.2
37	1.8	1.4	2.1	1.7	2.3	1.8	2.6	2.0	2.8	2.1	3.0	2.1	3.2	2.1	3.2	2.2
40	1.8	1.4	2.1	1.7	2.3	1.8	2.6	2.0	2.8	2.1	3.0	2.1	3.1	2.0	3.1	2.1
43	1.8	1.4	2.1	1.7	2.3	1.8	2.6	2.0	2.8	2.1	2.9	2.0	3.0	2.0	3.1	2.1
46	1.8	1.4	2.1	1.7	2.3	1.8	2.6	2.0	2.8	2.0	2.8	2.0	2.9	2.0	3.0	2.1

■ MODEL : AUXB12GALH

Outdoor temperature	Indoor temperature															
	20°CDB / 15 °CWB		23°CDB / 16 °CWB		24°CDB / 17 °CWB		26°CDB / 18 °CWB		27°CDB / 19 °CWB		28°CDB / 20 °CWB		30°CDB / 22 °CWB		32°CDB / 23 °CWB	
(°CDB)	TC	SHC	TC	SHC	TC	SHC	TC	SHC	TC	SHC	TC	SHC	TC	SHC	TC	SHC
10	2.4	1.8	2.7	2.3	3.0	2.4	3.3	2.6	3.6	2.7	3.9	2.7	4.5	2.8	4.8	3.1
15	2.4	1.8	2.7	2.3	3.0	2.4	3.3	2.6	3.6	2.7	3.9	2.7	4.5	2.8	4.8	3.1
21	2.4	1.8	2.7	2.3	3.0	2.4	3.3	2.6	3.6	2.7	3.9	2.7	4.5	2.8	4.7	3.0
23	2.4	1.8	2.7	2.3	3.0	2.4	3.3	2.6	3.6	2.7	3.9	2.7	4.5	2.8	4.6	3.0
25	2.4	1.8	2.7	2.3	3.0	2.4	3.3	2.6	3.6	2.7	3.9	2.7	4.5	2.8	4.6	3.0
27	2.4	1.8	2.7	2.3	3.0	2.4	3.3	2.6	3.6	2.7	3.9	2.7	4.4	2.8	4.5	2.9
30	2.4	1.8	2.7	2.3	3.0	2.4	3.3	2.6	3.6	2.7	3.9	2.7	4.3	2.8	4.4	2.9
33	2.4	1.8	2.7	2.3	3.0	2.4	3.3	2.6	3.6	2.7	3.9	2.7	4.2	2.7	4.3	2.9
35	2.4	1.8	2.7	2.3	3.0	2.4	3.3	2.6	3.6	2.7	3.9	2.7	4.1	2.7	4.2	2.8
37	2.4	1.8	2.7	2.3	3.0	2.4	3.3	2.6	3.6	2.7	3.9	2.7	4.1	2.7	4.1	2.8
40	2.4	1.8	2.7	2.3	3.0	2.4	3.3	2.6	3.6	2.7	3.8	2.7	4.0	2.6	4.0	2.8
43	2.4	1.8	2.7	2.3	3.0	2.4	3.3	2.6	3.6	2.7	3.7	2.7	3.9	2.6	3.9	2.7
46	2.4	1.8	2.7	2.3	3.0	2.4	3.3	2.6	3.5	2.6	3.6	2.6	3.8	2.6	3.8	2.7

TC : Total Capacity kW.

SHC : Sensible Heat Capacity kW.

COOLING CAPACITY

■ MODEL : AUXB14GALH

Outdoor temperature	Indoor temperature															
	20°CDB / 15 °CWB		23°CDB / 16 °CWB		24°CDB / 17 °CWB		26°CDB / 18 °CWB		27°CDB / 19 °CWB		28°CDB / 20 °CWB		30°CDB / 22 °CWB		32°CDB / 23 °CWB	
(°CDB)	TC	SHC	TC	SHC	TC	SHC	TC	SHC	TC	SHC	TC	SHC	TC	SHC	TC	SHC
10	3.0	2.2	3.3	2.7	3.7	2.8	4.1	3.1	4.5	3.2	4.9	3.3	5.6	3.4	6.0	3.7
15	3.0	2.2	3.3	2.7	3.7	2.8	4.1	3.1	4.5	3.2	4.9	3.3	5.6	3.4	6.0	3.7
21	3.0	2.2	3.3	2.7	3.7	2.8	4.1	3.1	4.5	3.2	4.9	3.3	5.6	3.4	5.9	3.6
23	3.0	2.2	3.3	2.7	3.7	2.8	4.1	3.1	4.5	3.2	4.9	3.3	5.6	3.4	5.8	3.6
25	3.0	2.2	3.3	2.7	3.7	2.8	4.1	3.1	4.5	3.2	4.9	3.3	5.6	3.4	5.7	3.6
27	3.0	2.2	3.3	2.7	3.7	2.8	4.1	3.1	4.5	3.2	4.9	3.3	5.5	3.4	5.6	3.5
30	3.0	2.2	3.3	2.7	3.7	2.8	4.1	3.1	4.5	3.2	4.9	3.3	5.4	3.3	5.5	3.5
33	3.0	2.2	3.3	2.7	3.7	2.8	4.1	3.1	4.5	3.2	4.9	3.3	5.3	3.3	5.4	3.4
35	3.0	2.2	3.3	2.7	3.7	2.8	4.1	3.1	4.5	3.2	4.9	3.3	5.2	3.2	5.3	3.4
37	3.0	2.2	3.3	2.7	3.7	2.8	4.1	3.1	4.5	3.2	4.9	3.3	5.1	3.2	5.2	3.4
40	3.0	2.2	3.3	2.7	3.7	2.8	4.1	3.1	4.5	3.2	4.8	3.2	5.0	3.2	5.0	3.3
43	3.0	2.2	3.3	2.7	3.7	2.8	4.1	3.1	4.5	3.2	4.6	3.2	4.8	3.1	4.9	3.3
46	3.0	2.2	3.3	2.7	3.7	2.8	4.1	3.1	4.4	3.2	4.5	3.1	4.7	3.1	4.8	3.2

■ MODEL : AUXB18GALH

Outdoor temperature	Indoor temperature															
	20°CDB / 15 °CWB		23°CDB / 16 °CWB		24°CDB / 17 °CWB		26°CDB / 18 °CWB		27°CDB / 19 °CWB		28°CDB / 20 °CWB		30°CDB / 22 °CWB		32°CDB / 23 °CWB	
(°CDB)	TC	SHC	TC	SHC	TC	SHC	TC	SHC	TC	SHC	TC	SHC	TC	SHC	TC	SHC
10	3.7	2.6	4.2	3.2	4.6	3.4	5.1	3.7	5.6	3.9	6.1	4.0	7.0	4.2	7.5	4.5
15	3.7	2.6	4.2	3.2	4.6	3.4	5.1	3.7	5.6	3.9	6.1	4.0	7.0	4.2	7.5	4.5
21	3.7	2.6	4.2	3.2	4.6	3.4	5.1	3.7	5.6	3.9	6.1	4.0	7.0	4.2	7.3	4.4
23	3.7	2.6	4.2	3.2	4.6	3.4	5.1	3.7	5.6	3.9	6.1	4.0	7.0	4.2	7.2	4.3
25	3.7	2.6	4.2	3.2	4.6	3.4	5.1	3.7	5.6	3.9	6.1	4.0	7.0	4.1	7.1	4.3
27	3.7	2.6	4.2	3.2	4.6	3.4	5.1	3.7	5.6	3.9	6.1	4.0	6.8	4.1	7.0	4.2
30	3.7	2.6	4.2	3.2	4.6	3.4	5.1	3.7	5.6	3.9	6.1	4.0	6.7	4.0	6.8	4.2
33	3.7	2.6	4.2	3.2	4.6	3.4	5.1	3.7	5.6	3.9	6.1	4.0	6.5	4.0	6.7	4.1
35	3.7	2.6	4.2	3.2	4.6	3.4	5.1	3.7	5.6	3.9	6.1	4.0	6.4	3.9	6.5	4.1
37	3.7	2.6	4.2	3.2	4.6	3.4	5.1	3.7	5.6	3.9	6.1	4.0	6.3	3.9	6.4	4.0
40	3.7	2.6	4.2	3.2	4.6	3.4	5.1	3.7	5.6	3.9	5.9	3.9	6.2	3.8	6.3	4.0
43	3.7	2.6	4.2	3.2	4.6	3.4	5.1	3.7	5.6	3.9	5.8	3.8	6.0	3.8	6.1	3.9
46	3.7	2.6	4.2	3.2	4.6	3.4	5.1	3.7	5.5	3.8	5.6	3.8	5.8	3.7	5.9	3.8

■ MODEL : AUXB24GALH

Outdoor temperature	Indoor temperature															
	20°CDB / 15 °CWB		23°CDB / 16 °CWB		24°CDB / 17 °CWB		26°CDB / 18 °CWB		27°CDB / 19 °CWB		28°CDB / 20 °CWB		30°CDB / 22 °CWB		32°CDB / 23 °CWB	
(°CDB)	TC	SHC	TC	SHC	TC	SHC	TC	SHC	TC	SHC	TC	SHC	TC	SHC	TC	SHC
10	4.7	3.5	5.3	4.4	5.9	4.5	6.5	5.0	7.1	5.2	7.7	5.3	8.9	5.5	9.5	5.9
15	4.7	3.5	5.3	4.4	5.9	4.5	6.5	5.0	7.1	5.2	7.7	5.3	8.9	5.5	9.5	5.9
21	4.7	3.5	5.3	4.4	5.9	4.5	6.5	5.0	7.1	5.2	7.7	5.3	8.9	5.5	9.3	5.8
23	4.7	3.5	5.3	4.4	5.9	4.5	6.5	5.0	7.1	5.2	7.7	5.3	8.9	5.5	9.1	5.8
25	4.7	3.5	5.3	4.4	5.9	4.5	6.5	5.0	7.1	5.2	7.7	5.3	8.8	5.5	9.0	5.7
27	4.7	3.5	5.3	4.4	5.9	4.5	6.5	5.0	7.1	5.2	7.7	5.3	8.7	5.4	8.8	5.7
30	4.7	3.5	5.3	4.4	5.9	4.5	6.5	5.0	7.1	5.2	7.7	5.3	8.5	5.3	8.6	5.6
33	4.7	3.5	5.3	4.4	5.9	4.5	6.5	5.0	7.1	5.2	7.7	5.3	8.3	5.3	8.4	5.5
35	4.7	3.5	5.3	4.4	5.9	4.5	6.5	5.0	7.1	5.2	7.7	5.3	8.1	5.2	8.3	5.4
37	4.7	3.5	5.3	4.4	5.9	4.5	6.5	5.0	7.1	5.2	7.7	5.3	8.0	5.2	8.2	5.4
40	4.7	3.5	5.3	4.4	5.9	4.5	6.5	5.0	7.1	5.2	7.5	5.2	7.8	5.1	8.0	5.3
43	4.7	3.5	5.3	4.4	5.9	4.5	6.5	5.0	7.1	5.2	7.3	5.1	7.6	5.0	7.8	5.3
46	4.7	3.5	5.3	4.4	5.9	4.5	6.5	5.0	7.0	5.1	7.1	5.1	7.4	5.0	7.5	5.2

TC : Total Capacity kW.
SHC : Sensible Heat Capacity kW.

7-2. CASSETTE TYPE

COOLING CAPACITY

■ MODEL : AUXD18GALH

Outdoor temperature	Indoor temperature															
	20°CDB / 15 °CWB		23°CDB / 16 °CWB		24°CDB / 17 °CWB		26°CDB / 18 °CWB		27°CDB / 19 °CWB		28°CDB / 20 °CWB		30°CDB / 22 °CWB		32°CDB / 23 °CWB	
(°CDB)	TC	SHC	TC	SHC	TC	SHC	TC	SHC	TC	SHC	TC	SHC	TC	SHC	TC	SHC
10	3.7	3.1	4.2	3.9	4.6	4.1	5.1	4.5	5.6	4.6	6.1	4.7	7.0	4.8	7.5	5.2
15	3.7	3.1	4.2	3.9	4.6	4.1	5.1	4.5	5.6	4.6	6.1	4.7	7.0	4.8	7.5	5.2
21	3.7	3.1	4.2	3.9	4.6	4.1	5.1	4.5	5.6	4.6	6.1	4.7	7.0	4.8	7.3	5.2
23	3.7	3.1	4.2	3.9	4.6	4.1	5.1	4.5	5.6	4.6	6.1	4.7	7.0	4.8	7.2	5.1
25	3.7	3.1	4.2	3.9	4.6	4.1	5.1	4.5	5.6	4.6	6.1	4.7	7.0	4.8	7.1	5.1
27	3.7	3.1	4.2	3.9	4.6	4.1	5.1	4.5	5.6	4.6	6.1	4.7	6.8	4.8	7.0	5.0
30	3.7	3.1	4.2	3.9	4.6	4.1	5.1	4.5	5.6	4.6	6.1	4.7	6.7	4.7	6.8	5.0
33	3.7	3.1	4.2	3.9	4.6	4.1	5.1	4.5	5.6	4.6	6.1	4.7	6.5	4.7	6.7	4.9
35	3.7	3.1	4.2	3.9	4.6	4.1	5.1	4.5	5.6	4.6	6.1	4.7	6.4	4.6	6.5	4.9
37	3.7	3.1	4.2	3.9	4.6	4.1	5.1	4.5	5.6	4.6	6.1	4.7	6.3	4.6	6.4	4.9
40	3.7	3.1	4.2	3.9	4.6	4.1	5.1	4.5	5.6	4.6	5.9	4.6	6.2	4.5	6.3	4.8
43	3.7	3.1	4.2	3.9	4.6	4.1	5.1	4.5	5.6	4.6	5.8	4.6	6.0	4.5	6.1	4.8
46	3.7	3.1	4.2	3.9	4.6	4.1	5.1	4.5	5.5	4.6	5.6	4.5	5.8	4.4	5.9	4.7

■ MODEL : AUXD24GALH

Outdoor temperature	Indoor temperature															
	20°CDB / 15 °CWB		23°CDB / 16 °CWB		24°CDB / 17 °CWB		26°CDB / 18 °CWB		27°CDB / 19 °CWB		28°CDB / 20 °CWB		30°CDB / 22 °CWB		32°CDB / 23 °CWB	
(°CDB)	TC	SHC	TC	SHC	TC	SHC	TC	SHC	TC	SHC	TC	SHC	TC	SHC	TC	SHC
10	4.7	3.8	5.3	4.8	5.9	4.9	6.5	5.5	7.1	5.6	7.7	5.7	8.9	5.9	9.5	6.4
15	4.7	3.8	5.3	4.8	5.9	4.9	6.5	5.5	7.1	5.6	7.7	5.7	8.9	5.9	9.5	6.4
21	4.7	3.8	5.3	4.8	5.9	4.9	6.5	5.5	7.1	5.6	7.7	5.7	8.9	5.9	9.3	6.3
23	4.7	3.8	5.3	4.8	5.9	4.9	6.5	5.5	7.1	5.6	7.7	5.7	8.9	5.9	9.1	6.2
25	4.7	3.8	5.3	4.8	5.9	4.9	6.5	5.5	7.1	5.6	7.7	5.7	8.8	5.9	9.0	6.2
27	4.7	3.8	5.3	4.8	5.9	4.9	6.5	5.5	7.1	5.6	7.7	5.7	8.7	5.8	8.8	6.1
30	4.7	3.8	5.3	4.8	5.9	4.9	6.5	5.5	7.1	5.6	7.7	5.7	8.5	5.8	8.6	6.1
33	4.7	3.8	5.3	4.8	5.9	4.9	6.5	5.5	7.1	5.6	7.7	5.7	8.3	5.7	8.4	6.0
35	4.7	3.8	5.3	4.8	5.9	4.9	6.5	5.5	7.1	5.6	7.7	5.7	8.1	5.6	8.3	6.0
37	4.7	3.8	5.3	4.8	5.9	4.9	6.5	5.5	7.1	5.6	7.7	5.7	8.0	5.6	8.2	5.9
40	4.7	3.8	5.3	4.8	5.9	4.9	6.5	5.5	7.1	5.6	7.5	5.7	7.8	5.5	8.0	5.9
43	4.7	3.8	5.3	4.8	5.9	4.9	6.5	5.5	7.1	5.6	7.3	5.6	7.6	5.5	7.8	5.8
46	4.7	3.8	5.3	4.8	5.9	4.9	6.5	5.5	7.0	5.6	7.1	5.5	7.4	5.4	7.5	5.7

TC : Total Capacity kW.
SHC : Sensible Heat Capacity kW.

COOLING CAPACITY

■ MODEL : AUXA30GALH

Outdoor temperature	Indoor temperature															
	20°CDB / 15 °CWB		23°CDB / 16 °CWB		24°CDB / 17 °CWB		26°CDB / 18 °CWB		27°CDB / 19 °CWB		28°CDB / 20 °CWB		30°CDB / 22 °CWB		32°CDB / 23 °CWB	
(°CDB)	TC	SHC	TC	SHC	TC	SHC	TC	SHC	TC	SHC	TC	SHC	TC	SHC	TC	SHC
10	5.9	4.8	6.7	6.0	7.5	6.2	8.2	6.9	9.0	7.1	9.7	7.2	11.3	7.5	12.1	8.0
15	5.9	4.8	6.7	6.0	7.5	6.2	8.2	6.9	9.0	7.1	9.7	7.2	11.3	7.5	12.1	8.0
21	5.9	4.8	6.7	6.0	7.5	6.2	8.2	6.9	9.0	7.1	9.7	7.2	11.3	7.5	11.7	7.9
23	5.9	4.8	6.7	6.0	7.5	6.2	8.2	6.9	9.0	7.1	9.7	7.2	11.3	7.5	11.5	7.9
25	5.9	4.8	6.7	6.0	7.5	6.2	8.2	6.9	9.0	7.1	9.7	7.2	11.2	7.4	11.4	7.8
27	5.9	4.8	6.7	6.0	7.5	6.2	8.2	6.9	9.0	7.1	9.7	7.2	11.0	7.4	11.2	7.7
30	5.9	4.8	6.7	6.0	7.5	6.2	8.2	6.9	9.0	7.1	9.7	7.2	10.8	7.3	11.0	7.6
33	5.9	4.8	6.7	6.0	7.5	6.2	8.2	6.9	9.0	7.1	9.7	7.2	10.5	7.2	10.7	7.6
35	5.9	4.8	6.7	6.0	7.5	6.2	8.2	6.9	9.0	7.1	9.7	7.2	10.3	7.1	10.5	7.5
37	5.9	4.8	6.7	6.0	7.5	6.2	8.2	6.9	9.0	7.1	9.7	7.2	10.2	7.1	10.4	7.4
40	5.9	4.8	6.7	6.0	7.5	6.2	8.2	6.9	9.0	7.1	9.5	7.1	9.9	7.0	10.1	7.4
43	5.9	4.8	6.7	6.0	7.5	6.2	8.2	6.9	9.0	7.1	9.3	7.0	9.6	6.9	9.8	7.3
46	5.9	4.8	6.7	6.0	7.5	6.2	8.2	6.9	8.8	6.9	9.0	7.0	9.4	6.8	9.5	7.2

■ MODEL : AUXA36GALH

Outdoor temperature	Indoor temperature															
	20°CDB / 15 °CWB		23°CDB / 16 °CWB		24°CDB / 17 °CWB		26°CDB / 18 °CWB		27°CDB / 19 °CWB		28°CDB / 20 °CWB		30°CDB / 22 °CWB		32°CDB / 23 °CWB	
(°CDB)	TC	SHC	TC	SHC	TC	SHC	TC	SHC	TC	SHC	TC	SHC	TC	SHC	TC	SHC
10	7.4	5.7	8.3	7.1	9.3	7.4	10.2	8.2	11.2	8.4	12.1	8.6	14.0	8.9	15.0	9.6
15	7.4	5.7	8.3	7.1	9.3	7.4	10.2	8.2	11.2	8.4	12.1	8.6	14.0	8.9	15.0	9.6
21	7.4	5.7	8.3	7.1	9.3	7.4	10.2	8.2	11.2	8.4	12.1	8.6	14.0	8.9	14.6	9.5
23	7.4	5.7	8.3	7.1	9.3	7.4	10.2	8.2	11.2	8.4	12.1	8.6	14.0	8.9	14.4	9.3
25	7.4	5.7	8.3	7.1	9.3	7.4	10.2	8.2	11.2	8.4	12.1	8.6	13.9	8.9	14.2	9.3
27	7.4	5.7	8.3	7.1	9.3	7.4	10.2	8.2	11.2	8.4	12.1	8.6	13.7	8.8	14.0	9.2
30	7.4	5.7	8.3	7.1	9.3	7.4	10.2	8.2	11.2	8.4	12.1	8.6	13.4	8.7	13.6	9.1
33	7.4	5.7	8.3	7.1	9.3	7.4	10.2	8.2	11.2	8.4	12.1	8.6	13.1	8.6	13.3	9.0
35	7.4	5.7	8.3	7.1	9.3	7.4	10.2	8.2	11.2	8.4	12.1	8.6	12.8	8.5	13.1	8.9
37	7.4	5.7	8.3	7.1	9.3	7.4	10.2	8.2	11.2	8.4	12.1	8.6	12.6	8.4	12.9	8.8
40	7.4	5.7	8.3	7.1	9.3	7.4	10.2	8.2	11.2	8.4	11.8	8.5	12.3	8.3	12.6	8.7
43	7.4	5.7	8.3	7.1	9.3	7.4	10.2	8.2	11.2	8.4	11.5	8.4	12.0	8.2	12.2	8.6
46	7.4	5.7	8.3	7.1	9.3	7.4	10.2	8.2	11.0	8.2	11.2	8.2	11.7	8.1	11.9	8.5

■ MODEL : AUXA45GALH

Outdoor temperature	Indoor temperature															
	20°CDB / 15 °CWB		23°CDB / 16 °CWB		24°CDB / 17 °CWB		26°CDB / 18 °CWB		27°CDB / 19 °CWB		28°CDB / 20 °CWB		30°CDB / 22 °CWB		32°CDB / 23 °CWB	
(°CDB)	TC	SHC	TC	SHC	TC	SHC	TC	SHC	TC	SHC	TC	SHC	TC	SHC	TC	SHC
10	8.2	6.3	9.3	7.7	10.4	8.0	11.4	8.9	12.5	9.1	13.5	9.3	15.7	9.7	16.7	10.5
15	8.2	6.3	9.3	7.7	10.4	8.0	11.4	8.9	12.5	9.1	13.5	9.3	15.7	9.7	16.7	10.5
21	8.2	6.3	9.3	7.7	10.4	8.0	11.4	8.9	12.5	9.1	13.5	9.3	15.7	9.7	16.3	10.3
23	8.2	6.3	9.3	7.7	10.4	8.0	11.4	8.9	12.5	9.1	13.5	9.3	15.7	9.7	16.0	10.2
25	8.2	6.3	9.3	7.7	10.4	8.0	11.4	8.9	12.5	9.1	13.5	9.3	15.5	9.7	15.8	10.1
27	8.2	6.3	9.3	7.7	10.4	8.0	11.4	8.9	12.5	9.1	13.5	9.3	15.3	9.6	15.6	10.0
30	8.2	6.3	9.3	7.7	10.4	8.0	11.4	8.9	12.5	9.1	13.5	9.3	15.0	9.5	15.2	9.9
33	8.2	6.3	9.3	7.7	10.4	8.0	11.4	8.9	12.5	9.1	13.5	9.3	14.6	9.3	14.9	9.8
35	8.2	6.3	9.3	7.7	10.4	8.0	11.4	8.9	12.5	9.1	13.5	9.3	14.3	9.2	14.6	9.7
37	8.2	6.3	9.3	7.7	10.4	8.0	11.4	8.9	12.5	9.1	13.5	9.3	14.1	9.1	14.4	9.6
40	8.2	6.3	9.3	7.7	10.4	8.0	11.4	8.9	12.5	9.1	13.2	9.2	13.8	9.0	14.0	9.5
43	8.2	6.3	9.3	7.7	10.4	8.0	11.4	8.9	12.5	9.1	12.9	9.1	13.4	8.9	13.7	9.3
46	8.2	6.3	9.3	7.7	10.4	8.0	11.4	8.9	12.3	9.0	12.5	9.0	13.0	8.8	13.3	9.2

■ MODEL : AUXA54GALH

Outdoor temperature	Indoor temperature															
	20°CDB / 15 °CWB		23°CDB / 16 °CWB		24°CDB / 17 °CWB		26°CDB / 18 °CWB		27°CDB / 19 °CWB		28°CDB / 20 °CWB		30°CDB / 22 °CWB		32°CDB / 23 °CWB	
(°CDB)	TC	SHC	TC	SHC	TC	SHC	TC	SHC	TC	SHC	TC	SHC	TC	SHC	TC	SHC
10	9.2	6.8	10.4	8.4	11.6	8.8	12.8	9.7	14.0	10.0	15.2	10.2	17.6	10.7	18.8	11.5
15	9.2	6.8	10.4	8.4	11.6	8.8	12.8	9.7	14.0	10.0	15.2	10.2	17.6	10.7	18.8	11.5
21	9.2	6.8	10.4	8.4	11.6	8.8	12.8	9.7	14.0	10.0	15.2	10.2	17.6	10.7	18.3	11.3
23	9.2	6.8	10.4	8.4	11.6	8.8	12.8	9.7	14.0	10.0	15.2	10.2	17.6	10.7	18.0	11.1
25	9.2	6.8	10.4	8.4	11.6	8.8	12.8	9.7	14.0	10.0	15.2	10.2	17.4	10.6	17.7	11.0
27	9.2	6.8	10.4	8.4	11.6	8.8	12.8	9.7	14.0	10.0	15.2	10.2	17.1	10.5	17.5	10.9
30	9.2	6.8	10.4	8.4	11.6	8.8	12.8	9.7	14.0	10.0	15.2	10.2	16.8	10.4	17.1	10.8
33	9.2	6.8	10.4	8.4	11.6	8.8	12.8	9.7	14.0	10.0	15.2	10.2	16.4	10.2	16.7	10.6
35	9.2	6.8	10.4	8.4	11.6	8.8	12.8	9.7	14.0	10.0	15.2	10.2	16.1	10.1	16.4	10.5
37	9.2	6.8	10.4	8.4	11.6	8.8	12.8	9.7	14.0	10.0	15.2	10.2	15.8	10.0	16.1	10.4
40	9.2	6.8	10.4	8.4	11.6	8.8	12.8	9.7	14.0	10.0	14.8	10.1	15.4	9.9	15.7	10.3
43	9.2	6.8	10.4	8.4	11.6	8.8	12.8	9.7	14.0	10.0	14.4	9.9	15.0	9.7	15.3	10.2
46	9.2	6.8	10.4	8.4	11.6	8.8	12.8	9.7	13.8	9.8	14.0	9.8	14.6	9.6	14.9	10.0

TC : Total Capacity kW.
SHC : Sensible Heat Capacity kW.

7-3. LOW STATIC PRESSURE DUCT/CONCEALED FLOOR TYPE

COOLING CAPACITY

■ MODEL : ARXB07GALH

Outdoor temperature	Indoor temperature															
	20°CDB / 15 °CWB		23°CDB / 16 °CWB		24°CDB / 17 °CWB		26°CDB / 18 °CWB		27°CDB / 19 °CWB		28°CDB / 20 °CWB		30°CDB / 22 °CWB		32°CDB / 23 °CWB	
(°CDB)	TC	SHC	TC	SHC	TC	SHC	TC	SHC	TC	SHC	TC	SHC	TC	SHC	TC	SHC
10	1.4	1.1	1.6	1.3	1.8	1.4	2.0	1.5	2.2	1.6	2.4	1.6	2.8	1.7	2.9	1.8
15	1.4	1.1	1.6	1.3	1.8	1.4	2.0	1.5	2.2	1.6	2.4	1.6	2.8	1.7	2.9	1.8
21	1.4	1.1	1.6	1.3	1.8	1.4	2.0	1.5	2.2	1.6	2.4	1.6	2.8	1.7	2.9	1.8
23	1.4	1.1	1.6	1.3	1.8	1.4	2.0	1.5	2.2	1.6	2.4	1.6	2.8	1.7	2.8	1.7
25	1.4	1.1	1.6	1.3	1.8	1.4	2.0	1.5	2.2	1.6	2.4	1.6	2.7	1.7	2.8	1.7
27	1.4	1.1	1.6	1.3	1.8	1.4	2.0	1.5	2.2	1.6	2.4	1.6	2.7	1.6	2.7	1.7
30	1.4	1.1	1.6	1.3	1.8	1.4	2.0	1.5	2.2	1.6	2.4	1.6	2.6	1.6	2.7	1.7
33	1.4	1.1	1.6	1.3	1.8	1.4	2.0	1.5	2.2	1.6	2.4	1.6	2.6	1.6	2.6	1.7
35	1.4	1.1	1.6	1.3	1.8	1.4	2.0	1.5	2.2	1.6	2.4	1.6	2.5	1.6	2.6	1.6
37	1.4	1.1	1.6	1.3	1.8	1.4	2.0	1.5	2.2	1.6	2.4	1.6	2.5	1.6	2.5	1.6
40	1.4	1.1	1.6	1.3	1.8	1.4	2.0	1.5	2.2	1.6	2.3	1.6	2.4	1.5	2.5	1.6
43	1.4	1.1	1.6	1.3	1.8	1.4	2.0	1.5	2.2	1.6	2.3	1.6	2.4	1.5	2.4	1.6
46	1.4	1.1	1.6	1.3	1.8	1.4	2.0	1.5	2.2	1.5	2.2	1.5	2.3	1.5	2.3	1.6

■ MODEL : ARXB09GALH

Outdoor temperature	Indoor temperature															
	20°CDB / 15 °CWB		23°CDB / 16 °CWB		24°CDB / 17 °CWB		26°CDB / 18 °CWB		27°CDB / 19 °CWB		28°CDB / 20 °CWB		30°CDB / 22 °CWB		32°CDB / 23 °CWB	
(°CDB)	TC	SHC	TC	SHC	TC	SHC	TC	SHC	TC	SHC	TC	SHC	TC	SHC	TC	SHC
10	1.8	1.4	2.1	1.7	2.3	1.7	2.6	1.9	2.8	2.0	3.0	2.0	3.5	2.1	3.8	2.3
15	1.8	1.4	2.1	1.7	2.3	1.7	2.6	1.9	2.8	2.0	3.0	2.0	3.5	2.1	3.8	2.3
21	1.8	1.4	2.1	1.7	2.3	1.7	2.6	1.9	2.8	2.0	3.0	2.0	3.5	2.1	3.7	2.2
23	1.8	1.4	2.1	1.7	2.3	1.7	2.6	1.9	2.8	2.0	3.0	2.0	3.5	2.1	3.6	2.2
25	1.8	1.4	2.1	1.7	2.3	1.7	2.6	1.9	2.8	2.0	3.0	2.0	3.5	2.1	3.5	2.2
27	1.8	1.4	2.1	1.7	2.3	1.7	2.6	1.9	2.8	2.0	3.0	2.0	3.4	2.1	3.5	2.2
30	1.8	1.4	2.1	1.7	2.3	1.7	2.6	1.9	2.8	2.0	3.0	2.0	3.4	2.1	3.4	2.1
33	1.8	1.4	2.1	1.7	2.3	1.7	2.6	1.9	2.8	2.0	3.0	2.0	3.3	2.0	3.3	2.1
35	1.8	1.4	2.1	1.7	2.3	1.7	2.6	1.9	2.8	2.0	3.0	2.0	3.2	2.0	3.3	2.1
37	1.8	1.4	2.1	1.7	2.3	1.7	2.6	1.9	2.8	2.0	3.0	2.0	3.2	2.0	3.2	2.1
40	1.8	1.4	2.1	1.7	2.3	1.7	2.6	1.9	2.8	2.0	3.0	2.0	3.1	2.0	3.1	2.0
43	1.8	1.4	2.1	1.7	2.3	1.7	2.6	1.9	2.8	2.0	2.9	2.0	3.0	1.9	3.1	2.0
46	1.8	1.4	2.1	1.7	2.3	1.7	2.6	1.9	2.8	2.0	2.8	1.9	2.9	1.9	3.0	2.0

TC : Total Capacity kW.

SHC : Sensible Heat Capacity kW.

MODEL SELECTION

COOLING CAPACITY

■ MODEL : ARXB12GALH

Outdoor temperature	Indoor temperature															
	20°CDB / 15 °CWB		23°CDB / 16 °CWB		24°CDB / 17 °CWB		26°CDB / 18 °CWB		27°CDB / 19 °CWB		28°CDB / 20 °CWB		30°CDB / 22 °CWB		32°CDB / 23 °CWB	
(°CDB)	TC	SHC	TC	SHC	TC	SHC	TC	SHC	TC	SHC	TC	SHC	TC	SHC	TC	SHC
10	2.4	1.8	2.7	2.2	3.0	2.3	3.3	2.6	3.6	2.7	3.9	2.7	4.5	2.8	4.8	3.0
15	2.4	1.8	2.7	2.2	3.0	2.3	3.3	2.6	3.6	2.7	3.9	2.7	4.5	2.8	4.8	3.0
21	2.4	1.8	2.7	2.2	3.0	2.3	3.3	2.6	3.6	2.7	3.9	2.7	4.5	2.8	4.7	3.0
23	2.4	1.8	2.7	2.2	3.0	2.3	3.3	2.6	3.6	2.7	3.9	2.7	4.5	2.8	4.6	3.0
25	2.4	1.8	2.7	2.2	3.0	2.3	3.3	2.6	3.6	2.7	3.9	2.7	4.5	2.8	4.6	2.9
27	2.4	1.8	2.7	2.2	3.0	2.3	3.3	2.6	3.6	2.7	3.9	2.7	4.4	2.8	4.5	2.9
30	2.4	1.8	2.7	2.2	3.0	2.3	3.3	2.6	3.6	2.7	3.9	2.7	4.3	2.7	4.4	2.9
33	2.4	1.8	2.7	2.2	3.0	2.3	3.3	2.6	3.6	2.7	3.9	2.7	4.2	2.7	4.3	2.8
35	2.4	1.8	2.7	2.2	3.0	2.3	3.3	2.6	3.6	2.7	3.9	2.7	4.1	2.7	4.2	2.8
37	2.4	1.8	2.7	2.2	3.0	2.3	3.3	2.6	3.6	2.7	3.9	2.7	4.1	2.7	4.1	2.8
40	2.4	1.8	2.7	2.2	3.0	2.3	3.3	2.6	3.6	2.7	3.8	2.7	4.0	2.6	4.0	2.8
43	2.4	1.8	2.7	2.2	3.0	2.3	3.3	2.6	3.6	2.7	3.7	2.6	3.9	2.6	3.9	2.7
46	2.4	1.8	2.7	2.2	3.0	2.3	3.3	2.6	3.5	2.6	3.6	2.6	3.8	2.5	3.8	2.7

■ MODEL : ARXB14GALH

Outdoor temperature	Indoor temperature															
	20°CDB / 15 °CWB		23°CDB / 16 °CWB		24°CDB / 17 °CWB		26°CDB / 18 °CWB		27°CDB / 19 °CWB		28°CDB / 20 °CWB		30°CDB / 22 °CWB		32°CDB / 23 °CWB	
(°CDB)	TC	SHC	TC	SHC	TC	SHC	TC	SHC	TC	SHC	TC	SHC	TC	SHC	TC	SHC
10	3.0	2.4	3.3	2.9	3.7	3.0	4.1	3.4	4.5	3.4	4.9	3.5	5.6	3.6	6.0	3.9
15	3.0	2.4	3.3	2.9	3.7	3.0	4.1	3.4	4.5	3.4	4.9	3.5	5.6	3.6	6.0	3.9
21	3.0	2.4	3.3	2.9	3.7	3.0	4.1	3.4	4.5	3.4	4.9	3.5	5.6	3.6	5.9	3.9
23	3.0	2.4	3.3	2.9	3.7	3.0	4.1	3.4	4.5	3.4	4.9	3.5	5.6	3.6	5.8	3.8
25	3.0	2.4	3.3	2.9	3.7	3.0	4.1	3.4	4.5	3.4	4.9	3.5	5.6	3.6	5.7	3.8
27	3.0	2.4	3.3	2.9	3.7	3.0	4.1	3.4	4.5	3.4	4.9	3.5	5.5	3.6	5.6	3.8
30	3.0	2.4	3.3	2.9	3.7	3.0	4.1	3.4	4.5	3.4	4.9	3.5	5.4	3.5	5.5	3.7
33	3.0	2.4	3.3	2.9	3.7	3.0	4.1	3.4	4.5	3.4	4.9	3.5	5.3	3.5	5.4	3.7
35	3.0	2.4	3.3	2.9	3.7	3.0	4.1	3.4	4.5	3.4	4.9	3.5	5.2	3.5	5.3	3.6
37	3.0	2.4	3.3	2.9	3.7	3.0	4.1	3.4	4.5	3.4	4.9	3.5	5.1	3.4	5.2	3.6
40	3.0	2.4	3.3	2.9	3.7	3.0	4.1	3.4	4.5	3.4	4.8	3.5	5.0	3.4	5.0	3.6
43	3.0	2.4	3.3	2.9	3.7	3.0	4.1	3.4	4.5	3.4	4.6	3.4	4.8	3.4	4.9	3.5
46	3.0	2.4	3.3	2.9	3.7	3.0	4.1	3.4	4.4	3.4	4.5	3.4	4.7	3.3	4.8	3.5

■ MODEL : ARXB18GALH

Outdoor temperature	Indoor temperature															
	20°CDB / 15 °CWB		23°CDB / 16 °CWB		24°CDB / 17 °CWB		26°CDB / 18 °CWB		27°CDB / 19 °CWB		28°CDB / 20 °CWB		30°CDB / 22 °CWB		32°CDB / 23 °CWB	
(°CDB)	TC	SHC	TC	SHC	TC	SHC	TC	SHC	TC	SHC	TC	SHC	TC	SHC	TC	SHC
10	3.7	2.8	4.2	3.4	4.6	3.6	5.1	4.0	5.6	4.1	6.1	4.2	7.0	4.3	7.5	4.7
15	3.7	2.8	4.2	3.4	4.6	3.6	5.1	4.0	5.6	4.1	6.1	4.2	7.0	4.3	7.5	4.7
21	3.7	2.8	4.2	3.4	4.6	3.6	5.1	4.0	5.6	4.1	6.1	4.2	7.0	4.3	7.3	4.6
23	3.7	2.8	4.2	3.4	4.6	3.6	5.1	4.0	5.6	4.1	6.1	4.2	7.0	4.3	7.2	4.5
25	3.7	2.8	4.2	3.4	4.6	3.6	5.1	4.0	5.6	4.1	6.1	4.2	7.0	4.3	7.1	4.5
27	3.7	2.8	4.2	3.4	4.6	3.6	5.1	4.0	5.6	4.1	6.1	4.2	6.8	4.3	7.0	4.5
30	3.7	2.8	4.2	3.4	4.6	3.6	5.1	4.0	5.6	4.1	6.1	4.2	6.7	4.2	6.8	4.4
33	3.7	2.8	4.2	3.4	4.6	3.6	5.1	4.0	5.6	4.1	6.1	4.2	6.5	4.2	6.7	4.3
35	3.7	2.8	4.2	3.4	4.6	3.6	5.1	4.0	5.6	4.1	6.1	4.2	6.4	4.1	6.5	4.3
37	3.7	2.8	4.2	3.4	4.6	3.6	5.1	4.0	5.6	4.1	6.1	4.2	6.3	4.1	6.4	4.3
40	3.7	2.8	4.2	3.4	4.6	3.6	5.1	4.0	5.6	4.1	5.9	4.1	6.2	4.0	6.3	4.2
43	3.7	2.8	4.2	3.4	4.6	3.6	5.1	4.0	5.6	4.1	5.8	4.1	6.0	4.0	6.1	4.2
46	3.7	2.8	4.2	3.4	4.6	3.6	5.1	4.0	5.5	4.1	5.6	4.0	5.8	3.9	5.9	4.1

TC : Total Capacity kW.

SHC : Sensible Heat Capacity kW.

7-4. SLIM DUCT/SLIM CONCEALED FLOOR TYPE

COOLING CAPACITY

■ MODEL : ARXD04GALH

Outdoor temperature	Indoor temperature															
	20°CDB / 15 °CWB		23°CDB / 16 °CWB		24°CDB / 17 °CWB		26°CDB / 18 °CWB		27°CDB / 19 °CWB		28°CDB / 20 °CWB		30°CDB / 22 °CWB		32°CDB / 23 °CWB	
(°CDB)	TC	SHC	TC	SHC	TC	SHC	TC	SHC	TC	SHC	TC	SHC	TC	SHC	TC	SHC
10	0.7	0.6	0.8	0.7	0.9	0.8	1.0	0.9	1.1	1.0	1.2	1.0	1.4	1.0	1.5	1.1
15	0.7	0.6	0.8	0.7	0.9	0.8	1.0	0.9	1.1	1.0	1.2	1.0	1.4	1.0	1.5	1.1
21	0.7	0.6	0.8	0.7	0.9	0.8	1.0	0.9	1.1	1.0	1.2	1.0	1.4	1.0	1.4	1.0
23	0.7	0.6	0.8	0.7	0.9	0.8	1.0	0.9	1.1	1.0	1.2	1.0	1.4	1.0	1.4	1.0
25	0.7	0.6	0.8	0.7	0.9	0.8	1.0	0.9	1.1	1.0	1.2	1.0	1.4	1.0	1.4	1.0
27	0.7	0.6	0.8	0.7	0.9	0.8	1.0	0.9	1.1	1.0	1.2	1.0	1.3	0.9	1.4	1.0
30	0.7	0.6	0.8	0.7	0.9	0.8	1.0	0.9	1.1	1.0	1.2	1.0	1.3	0.9	1.3	0.9
33	0.7	0.6	0.8	0.7	0.9	0.8	1.0	0.9	1.1	1.0	1.2	1.0	1.3	0.9	1.3	0.9
35	0.7	0.6	0.8	0.7	0.9	0.8	1.0	0.9	1.1	1.0	1.2	1.0	1.3	0.9	1.3	0.9
37	0.7	0.6	0.8	0.7	0.9	0.8	1.0	0.9	1.1	1.0	1.2	1.0	1.2	0.9	1.3	0.9
40	0.7	0.6	0.8	0.7	0.9	0.8	1.0	0.9	1.1	1.0	1.2	1.0	1.2	0.9	1.2	0.9
43	0.7	0.6	0.8	0.7	0.9	0.8	1.0	0.9	1.1	1.0	1.1	0.9	1.2	0.9	1.2	0.9
46	0.7	0.6	0.8	0.7	0.9	0.8	1.0	0.9	1.1	1.0	1.1	0.9	1.1	0.8	1.2	0.9

■ MODEL : ARXD07GALH

Outdoor temperature	Indoor temperature															
	20°CDB / 15 °CWB		23°CDB / 16 °CWB		24°CDB / 17 °CWB		26°CDB / 18 °CWB		27°CDB / 19 °CWB		28°CDB / 20 °CWB		30°CDB / 22 °CWB		32°CDB / 23 °CWB	
(°CDB)	TC	SHC	TC	SHC	TC	SHC	TC	SHC	TC	SHC	TC	SHC	TC	SHC	TC	SHC
10	1.4	1.2	1.6	1.5	1.8	1.6	2.0	1.8	2.2	1.8	2.4	1.8	2.8	1.9	2.9	2.1
15	1.4	1.2	1.6	1.5	1.8	1.6	2.0	1.8	2.2	1.8	2.4	1.8	2.8	1.9	2.9	2.1
21	1.4	1.2	1.6	1.5	1.8	1.6	2.0	1.8	2.2	1.8	2.4	1.8	2.8	1.9	2.9	2.0
23	1.4	1.2	1.6	1.5	1.8	1.6	2.0	1.8	2.2	1.8	2.4	1.8	2.8	1.9	2.8	2.0
25	1.4	1.2	1.6	1.5	1.8	1.6	2.0	1.8	2.2	1.8	2.4	1.8	2.7	1.9	2.8	2.0
27	1.4	1.2	1.6	1.5	1.8	1.6	2.0	1.8	2.2	1.8	2.4	1.8	2.7	1.9	2.7	2.0
30	1.4	1.2	1.6	1.5	1.8	1.6	2.0	1.8	2.2	1.8	2.4	1.8	2.6	1.9	2.7	2.0
33	1.4	1.2	1.6	1.5	1.8	1.6	2.0	1.8	2.2	1.8	2.4	1.8	2.6	1.8	2.6	1.9
35	1.4	1.2	1.6	1.5	1.8	1.6	2.0	1.8	2.2	1.8	2.4	1.8	2.5	1.8	2.6	1.9
37	1.4	1.2	1.6	1.5	1.8	1.6	2.0	1.8	2.2	1.8	2.4	1.8	2.5	1.8	2.5	1.9
40	1.4	1.2	1.6	1.5	1.8	1.6	2.0	1.8	2.2	1.8	2.3	1.8	2.4	1.8	2.5	1.9
43	1.4	1.2	1.6	1.5	1.8	1.6	2.0	1.8	2.2	1.8	2.3	1.8	2.4	1.8	2.4	1.9
46	1.4	1.2	1.6	1.5	1.8	1.6	2.0	1.8	2.2	1.8	2.2	1.8	2.3	1.7	2.3	1.8

■ MODEL : ARXD09GALH

Outdoor temperature	Indoor temperature															
	20°CDB / 15 °CWB		23°CDB / 16 °CWB		24°CDB / 17 °CWB		26°CDB / 18 °CWB		27°CDB / 19 °CWB		28°CDB / 20 °CWB		30°CDB / 22 °CWB		32°CDB / 23 °CWB	
(°CDB)	TC	SHC	TC	SHC	TC	SHC	TC	SHC	TC	SHC	TC	SHC	TC	SHC	TC	SHC
10	1.8	1.5	2.1	1.8	2.3	1.9	2.6	2.1	2.8	2.1	3.0	2.2	3.5	2.3	3.8	2.4
15	1.8	1.5	2.1	1.8	2.3	1.9	2.6	2.1	2.8	2.1	3.0	2.2	3.5	2.3	3.8	2.4
21	1.8	1.5	2.1	1.8	2.3	1.9	2.6	2.1	2.8	2.1	3.0	2.2	3.5	2.3	3.7	2.4
23	1.8	1.5	2.1	1.8	2.3	1.9	2.6	2.1	2.8	2.1	3.0	2.2	3.5	2.3	3.6	2.4
25	1.8	1.5	2.1	1.8	2.3	1.9	2.6	2.1	2.8	2.1	3.0	2.2	3.5	2.3	3.5	2.4
27	1.8	1.5	2.1	1.8	2.3	1.9	2.6	2.1	2.8	2.1	3.0	2.2	3.4	2.2	3.5	2.3
30	1.8	1.5	2.1	1.8	2.3	1.9	2.6	2.1	2.8	2.1	3.0	2.2	3.4	2.2	3.4	2.3
33	1.8	1.5	2.1	1.8	2.3	1.9	2.6	2.1	2.8	2.1	3.0	2.2	3.3	2.2	3.3	2.3
35	1.8	1.5	2.1	1.8	2.3	1.9	2.6	2.1	2.8	2.1	3.0	2.2	3.2	2.2	3.3	2.3
37	1.8	1.5	2.1	1.8	2.3	1.9	2.6	2.1	2.8	2.1	3.0	2.2	3.2	2.1	3.2	2.2
40	1.8	1.5	2.1	1.8	2.3	1.9	2.6	2.1	2.8	2.1	3.0	2.2	3.1	2.1	3.1	2.2
43	1.8	1.5	2.1	1.8	2.3	1.9	2.6	2.1	2.8	2.1	2.9	2.1	3.0	2.1	3.1	2.2
46	1.8	1.5	2.1	1.8	2.3	1.9	2.6	2.1	2.8	2.1	2.8	2.1	2.9	2.1	3.0	2.2

■ MODEL : ARXD12GALH

Outdoor temperature	Indoor temperature															
	20°CDB / 15 °CWB		23°CDB / 16 °CWB		24°CDB / 17 °CWB		26°CDB / 18 °CWB		27°CDB / 19 °CWB		28°CDB / 20 °CWB		30°CDB / 22 °CWB		32°CDB / 23 °CWB	
(°CDB)	TC	SHC	TC	SHC	TC	SHC	TC	SHC	TC	SHC	TC	SHC	TC	SHC	TC	SHC
10	2.4	1.8	2.7	2.3	3.0	2.4	3.3	2.6	3.6	2.7	3.9	2.7	4.5	2.8	4.8	3.1
15	2.4	1.8	2.7	2.3	3.0	2.4	3.3	2.6	3.6	2.7	3.9	2.7	4.5	2.8	4.8	3.1
21	2.4	1.8	2.7	2.3	3.0	2.4	3.3	2.6	3.6	2.7	3.9	2.7	4.5	2.8	4.7	3.0
23	2.4	1.8	2.7	2.3	3.0	2.4	3.3	2.6	3.6	2.7	3.9	2.7	4.5	2.8	4.6	3.0
25	2.4	1.8	2.7	2.3	3.0	2.4	3.3	2.6	3.6	2.7	3.9	2.7	4.5	2.8	4.6	3.0
27	2.4	1.8	2.7	2.3	3.0	2.4	3.3	2.6	3.6	2.7	3.9	2.7	4.4	2.8	4.5	2.9
30	2.4	1.8	2.7	2.3	3.0	2.4	3.3	2.6	3.6	2.7	3.9	2.7	4.3	2.8	4.4	2.9
33	2.4	1.8	2.7	2.3	3.0	2.4	3.3	2.6	3.6	2.7	3.9	2.7	4.2	2.7	4.3	2.9
35	2.4	1.8	2.7	2.3	3.0	2.4	3.3	2.6	3.6	2.7	3.9	2.7	4.1	2.7	4.2	2.8
37	2.4	1.8	2.7	2.3	3.0	2.4	3.3	2.6	3.6	2.7	3.9	2.7	4.1	2.7	4.1	2.8
40	2.4	1.8	2.7	2.3	3.0	2.4	3.3	2.6	3.6	2.7	3.8	2.7	4.0	2.6	4.0	2.8
43	2.4	1.8	2.7	2.3	3.0	2.4	3.3	2.6	3.6	2.7	3.7	2.7	3.9	2.6	3.9	2.7
46	2.4	1.8	2.7	2.3	3.0	2.4	3.3	2.6	3.5	2.7	3.6	2.6	3.8	2.6	3.8	2.7

TC : Total Capacity kW.

SHC : Sensible Heat Capacity kW.

MODEL SELECTION

COOLING CAPACITY

■ MODEL : ARXD14GALH

Outdoor temperature	Indoor temperature															
	20°CDB / 15 °CWB		23°CDB / 16 °CWB		24°CDB / 17 °CWB		26°CDB / 18 °CWB		27°CDB / 19 °CWB		28°CDB / 20 °CWB		30°CDB / 22 °CWB		32°CDB / 23 °CWB	
(°CDB)	TC	SHC	TC	SHC	TC	SHC	TC	SHC	TC	SHC	TC	SHC	TC	SHC	TC	SHC
10	3.0	2.4	3.3	2.9	3.7	3.0	4.1	3.4	4.5	3.4	4.9	3.5	5.6	3.6	6.0	3.9
15	3.0	2.4	3.3	2.9	3.7	3.0	4.1	3.4	4.5	3.4	4.9	3.5	5.6	3.6	6.0	3.9
21	3.0	2.4	3.3	2.9	3.7	3.0	4.1	3.4	4.5	3.4	4.9	3.5	5.6	3.6	5.9	3.9
23	3.0	2.4	3.3	2.9	3.7	3.0	4.1	3.4	4.5	3.4	4.9	3.5	5.6	3.6	5.8	3.8
25	3.0	2.4	3.3	2.9	3.7	3.0	4.1	3.4	4.5	3.4	4.9	3.5	5.6	3.6	5.7	3.8
27	3.0	2.4	3.3	2.9	3.7	3.0	4.1	3.4	4.5	3.4	4.9	3.5	5.5	3.6	5.6	3.8
30	3.0	2.4	3.3	2.9	3.7	3.0	4.1	3.4	4.5	3.4	4.9	3.5	5.4	3.5	5.5	3.7
33	3.0	2.4	3.3	2.9	3.7	3.0	4.1	3.4	4.5	3.4	4.9	3.5	5.3	3.5	5.4	3.7
35	3.0	2.4	3.3	2.9	3.7	3.0	4.1	3.4	4.5	3.4	4.9	3.5	5.2	3.5	5.3	3.6
37	3.0	2.4	3.3	2.9	3.7	3.0	4.1	3.4	4.5	3.4	4.9	3.5	5.1	3.4	5.2	3.6
40	3.0	2.4	3.3	2.9	3.7	3.0	4.1	3.4	4.5	3.4	4.8	3.5	5.0	3.4	5.0	3.6
43	3.0	2.4	3.3	2.9	3.7	3.0	4.1	3.4	4.5	3.4	4.6	3.4	4.8	3.4	4.9	3.5
46	3.0	2.4	3.3	2.9	3.7	3.0	4.1	3.4	4.4	3.4	4.5	3.4	4.7	3.3	4.8	3.5

■ MODEL : ARXD18GALH

Outdoor temperature	Indoor temperature															
	20°CDB / 15 °CWB		23°CDB / 16 °CWB		24°CDB / 17 °CWB		26°CDB / 18 °CWB		27°CDB / 19 °CWB		28°CDB / 20 °CWB		30°CDB / 22 °CWB		32°CDB / 23 °CWB	
(°CDB)	TC	SHC	TC	SHC	TC	SHC	TC	SHC	TC	SHC	TC	SHC	TC	SHC	TC	SHC
10	3.7	2.9	4.2	3.5	4.6	3.7	5.1	4.1	5.6	4.2	6.1	4.3	7.0	4.4	7.5	4.8
15	3.7	2.9	4.2	3.5	4.6	3.7	5.1	4.1	5.6	4.2	6.1	4.3	7.0	4.4	7.5	4.8
21	3.7	2.9	4.2	3.5	4.6	3.7	5.1	4.1	5.6	4.2	6.1	4.3	7.0	4.4	7.3	4.7
23	3.7	2.9	4.2	3.5	4.6	3.7	5.1	4.1	5.6	4.2	6.1	4.3	7.0	4.4	7.2	4.7
25	3.7	2.9	4.2	3.5	4.6	3.7	5.1	4.1	5.6	4.2	6.1	4.3	7.0	4.4	7.1	4.6
27	3.7	2.9	4.2	3.5	4.6	3.7	5.1	4.1	5.6	4.2	6.1	4.3	6.8	4.4	7.0	4.6
30	3.7	2.9	4.2	3.5	4.6	3.7	5.1	4.1	5.6	4.2	6.1	4.3	6.7	4.3	6.8	4.5
33	3.7	2.9	4.2	3.5	4.6	3.7	5.1	4.1	5.6	4.2	6.1	4.3	6.5	4.3	6.7	4.5
35	3.7	2.9	4.2	3.5	4.6	3.7	5.1	4.1	5.6	4.2	6.1	4.3	6.4	4.2	6.5	4.4
37	3.7	2.9	4.2	3.5	4.6	3.7	5.1	4.1	5.6	4.2	6.1	4.3	6.3	4.2	6.4	4.4
40	3.7	2.9	4.2	3.5	4.6	3.7	5.1	4.1	5.6	4.2	5.9	4.2	6.2	4.1	6.3	4.3
43	3.7	2.9	4.2	3.5	4.6	3.7	5.1	4.1	5.6	4.2	5.8	4.2	6.0	4.1	6.1	4.3
46	3.7	2.9	4.2	3.5	4.6	3.7	5.1	4.1	5.5	4.2	5.6	4.1	5.8	4.0	5.9	4.2

■ MODEL : ARXD24GALH

Outdoor temperature	Indoor temperature															
	20°CDB / 15 °CWB		23°CDB / 16 °CWB		24°CDB / 17 °CWB		26°CDB / 18 °CWB		27°CDB / 19 °CWB		28°CDB / 20 °CWB		30°CDB / 22 °CWB		32°CDB / 23 °CWB	
(°CDB)	TC	SHC	TC	SHC	TC	SHC	TC	SHC	TC	SHC	TC	SHC	TC	SHC	TC	SHC
10	4.7	3.9	5.3	4.9	5.9	5.0	6.5	5.6	7.1	5.7	7.7	5.8	8.9	6.0	9.5	6.5
15	4.7	3.9	5.3	4.9	5.9	5.0	6.5	5.6	7.1	5.7	7.7	5.8	8.9	6.0	9.5	6.5
21	4.7	3.9	5.3	4.9	5.9	5.0	6.5	5.6	7.1	5.7	7.7	5.8	8.9	6.0	9.3	6.4
23	4.7	3.9	5.3	4.9	5.9	5.0	6.5	5.6	7.1	5.7	7.7	5.8	8.9	6.0	9.1	6.4
25	4.7	3.9	5.3	4.9	5.9	5.0	6.5	5.6	7.1	5.7	7.7	5.8	8.8	6.0	9.0	6.3
27	4.7	3.9	5.3	4.9	5.9	5.0	6.5	5.6	7.1	5.7	7.7	5.8	8.7	5.9	8.8	6.3
30	4.7	3.9	5.3	4.9	5.9	5.0	6.5	5.6	7.1	5.7	7.7	5.8	8.5	5.9	8.6	6.2
33	4.7	3.9	5.3	4.9	5.9	5.0	6.5	5.6	7.1	5.7	7.7	5.8	8.3	5.8	8.4	6.1
35	4.7	3.9	5.3	4.9	5.9	5.0	6.5	5.6	7.1	5.7	7.7	5.8	8.1	5.8	8.3	6.1
37	4.7	3.9	5.3	4.9	5.9	5.0	6.5	5.6	7.1	5.7	7.7	5.8	8.0	5.7	8.2	6.0
40	4.7	3.9	5.3	4.9	5.9	5.0	6.5	5.6	7.1	5.7	7.5	5.8	7.8	5.7	8.0	6.0
43	4.7	3.9	5.3	4.9	5.9	5.0	6.5	5.6	7.1	5.7	7.3	5.7	7.6	5.6	7.8	5.9
46	4.7	3.9	5.3	4.9	5.9	5.0	6.5	5.6	7.0	5.7	7.1	5.6	7.4	5.5	7.5	5.8

TC : Total Capacity kW.
SHC : Sensible Heat Capacity kW.

7-5. MEDIUM STATIC PRESSURE DUCT TYPE

COOLING CAPACITY

■ MODEL : ARXA24GBLH

Outdoor temperature	Indoor temperature															
	20°CDB / 15 °CWB		23°CDB / 16 °CWB		24°CDB / 17 °CWB		26°CDB / 18 °CWB		27°CDB / 19 °CWB		28°CDB / 20 °CWB		30°CDB / 22 °CWB		32°CDB / 23 °CWB	
(°CDB)	TC	SHC	TC	SHC	TC	SHC	TC	SHC	TC	SHC	TC	SHC	TC	SHC	TC	SHC
10	4.7	3.8	5.3	4.7	5.9	4.9+	6.5	5.4	7.1	5.6	7.7	5.7	8.9	5.9	9.5	6.3
15	4.7	3.8	5.3	4.7	5.9	4.9	6.5	5.4	7.1	5.6	7.7	5.7	8.9	5.9	9.5	6.3
21	4.7	3.8	5.3	4.7	5.9	4.9	6.5	5.4	7.1	5.6	7.7	5.7	8.9	5.9	9.3	6.2
23	4.7	3.8	5.3	4.7	5.9	4.9	6.5	5.4	7.1	5.6	7.7	5.7	8.9	5.9	9.1	6.2
25	4.7	3.8	5.3	4.7	5.9	4.9	6.5	5.4	7.1	5.6	7.7	5.7	8.8	5.8	9.0	6.1
27	4.7	3.8	5.3	4.7	5.9	4.9	6.5	5.4	7.1	5.6	7.7	5.7	8.7	5.8	8.8	6.1
30	4.7	3.8	5.3	4.7	5.9	4.9	6.5	5.4	7.1	5.6	7.7	5.7	8.5	5.7	8.6	6.0
33	4.7	3.8	5.3	4.7	5.9	4.9	6.5	5.4	7.1	5.6	7.7	5.7	8.3	5.7	8.4	5.9
35	4.7	3.8	5.3	4.7	5.9	4.9	6.5	5.4	7.1	5.6	7.7	5.7	8.1	5.6	8.3	5.9
37	4.7	3.8	5.3	4.7	5.9	4.9	6.5	5.4	7.1	5.6	7.7	5.7	8.0	5.5	8.2	5.8
40	4.7	3.8	5.3	4.7	5.9	4.9	6.5	5.4	7.1	5.6	7.5	5.6	7.8	5.5	8.0	5.8
43	4.7	3.8	5.3	4.7	5.9	4.9	6.5	5.4	7.1	5.6	7.3	5.5	7.6	5.4	7.8	5.7
46	4.7	3.8	5.3	4.7	5.9	4.9	6.5	5.4	7.0	5.5	7.1	5.5	7.4	5.3	7.5	5.6

■ MODEL : ARXA30GBLH

Outdoor temperature	Indoor temperature															
	20°CDB / 15 °CWB		23°CDB / 16 °CWB		24°CDB / 17 °CWB		26°CDB / 18 °CWB		27°CDB / 19 °CWB		28°CDB / 20 °CWB		30°CDB / 22 °CWB		32°CDB / 23 °CWB	
(°CDB)	TC	SHC	TC	SHC	TC	SHC	TC	SHC	TC	SHC	TC	SHC	TC	SHC	TC	SHC
10	5.9	4.6	6.7	5.6	7.5	5.9	8.2	6.5	9.0	6.7	9.7	6.8	11.3	7.1	12.1	7.6
15	5.9	4.6	6.7	5.6	7.5	5.9	8.2	6.5	9.0	6.7	9.7	6.8	11.3	7.1	12.1	7.6
21	5.9	4.6	6.7	5.6	7.5	5.9	8.2	6.5	9.0	6.7	9.7	6.8	11.3	7.1	11.7	7.5
23	5.9	4.6	6.7	5.6	7.5	5.9	8.2	6.5	9.0	6.7	9.7	6.8	11.3	7.1	11.5	7.4
25	5.9	4.6	6.7	5.6	7.5	5.9	8.2	6.5	9.0	6.7	9.7	6.8	11.2	7.1	11.4	7.4
27	5.9	4.6	6.7	5.6	7.5	5.9	8.2	6.5	9.0	6.7	9.7	6.8	11.0	7.0	11.2	7.3
30	5.9	4.6	6.7	5.6	7.5	5.9	8.2	6.5	9.0	6.7	9.7	6.8	10.8	6.9	11.0	7.2
33	5.9	4.6	6.7	5.6	7.5	5.9	8.2	6.5	9.0	6.7	9.7	6.8	10.5	6.8	10.7	7.1
35	5.9	4.6	6.7	5.6	7.5	5.9	8.2	6.5	9.0	6.7	9.7	6.8	10.3	6.7	10.5	7.0
37	5.9	4.6	6.7	5.6	7.5	5.9	8.2	6.5	9.0	6.7	9.7	6.8	10.2	6.7	10.4	7.0
40	5.9	4.6	6.7	5.6	7.5	5.9	8.2	6.5	9.0	6.7	9.5	6.7	9.9	6.6	10.1	6.9
43	5.9	4.6	6.7	5.6	7.5	5.9	8.2	6.5	9.0	6.7	9.3	6.6	9.6	6.5	9.8	6.8
46	5.9	4.6	6.7	5.6	7.5	5.9	8.2	6.5	8.8	6.6	9.0	6.5	9.4	6.4	9.5	6.7

■ MODEL : ARXA36GBLH

Outdoor temperature	Indoor temperature															
	20°CDB / 15 °CWB		23°CDB / 16 °CWB		24°CDB / 17 °CWB		26°CDB / 18 °CWB		27°CDB / 19 °CWB		28°CDB / 20 °CWB		30°CDB / 22 °CWB		32°CDB / 23 °CWB	
(°CDB)	TC	SHC	TC	SHC	TC	SHC	TC	SHC	TC	SHC	TC	SHC	TC	SHC	TC	SHC
10	7.4	5.7	8.3	7.0	9.3	7.3	10.2	8.0	11.2	8.2	12.1	8.4	14.0	8.7	15.0	9.5
15	7.4	5.7	8.3	7.0	9.3	7.3	10.2	8.0	11.2	8.2	12.1	8.4	14.0	8.7	15.0	9.5
21	7.4	5.7	8.3	7.0	9.3	7.3	10.2	8.0	11.2	8.2	12.1	8.4	14.0	8.7	14.6	9.4
23	7.4	5.7	8.3	7.0	9.3	7.3	10.2	8.0	11.2	8.2	12.1	8.4	14.0	8.7	14.4	9.3
25	7.4	5.7	8.3	7.0	9.3	7.3	10.2	8.0	11.2	8.2	12.1	8.4	13.9	8.7	14.2	9.2
27	7.4	5.7	8.3	7.0	9.3	7.3	10.2	8.0	11.2	8.2	12.1	8.4	13.7	8.6	14.0	9.1
30	7.4	5.7	8.3	7.0	9.3	7.3	10.2	8.0	11.2	8.2	12.1	8.4	13.4	8.4	13.6	9.0
33	7.4	5.7	8.3	7.0	9.3	7.3	10.2	8.0	11.2	8.2	12.1	8.4	13.1	8.3	13.3	8.9
35	7.4	5.7	8.3	7.0	9.3	7.3	10.2	8.0	11.2	8.2	12.1	8.4	12.8	8.2	13.1	8.8
37	7.4	5.7	8.3	7.0	9.3	7.3	10.2	8.0	11.2	8.2	12.1	8.4	12.6	8.2	12.9	8.7
40	7.4	5.7	8.3	7.0	9.3	7.3	10.2	8.0	11.2	8.2	11.8	8.3	12.3	8.0	12.6	8.6
43	7.4	5.7	8.3	7.0	9.3	7.3	10.2	8.0	11.2	8.2	11.5	8.2	12.0	7.9	12.2	8.5
46	7.4	5.7	8.3	7.0	9.3	7.3	10.2	8.0	11.0	8.1	11.2	8.1	11.7	7.8	11.9	8.4

■ MODEL : ARXA45GBLH

Outdoor temperature	Indoor temperature															
	20°CDB / 15 °CWB		23°CDB / 16 °CWB		24°CDB / 17 °CWB		26°CDB / 18 °CWB		27°CDB / 19 °CWB		28°CDB / 20 °CWB		30°CDB / 22 °CWB		32°CDB / 23 °CWB	
(°CDB)	TC	SHC	TC	SHC	TC	SHC	TC	SHC	TC	SHC	TC	SHC	TC	SHC	TC	SHC
10	8.2	6.4	9.3	7.9	10.4	8.2	11.4	9.0	12.5	9.3	13.5	9.5	15.7	9.9	16.7	10.6
15	8.2	6.4	9.3	7.9	10.4	8.2	11.4	9.0	12.5	9.3	13.5	9.5	15.7	9.9	16.7	10.6
21	8.2	6.4	9.3	7.9	10.4	8.2	11.4	9.0	12.5	9.3	13.5	9.5	15.7	9.9	16.3	10.5
23	8.2	6.4	9.3	7.9	10.4	8.2	11.4	9.0	12.5	9.3	13.5	9.5	15.7	9.9	16.0	10.4
25	8.2	6.4	9.3	7.9	10.4	8.2	11.4	9.0	12.5	9.3	13.5	9.5	15.5	9.8	15.8	10.3
27	8.2	6.4	9.3	7.9	10.4	8.2	11.4	9.0	12.5	9.3	13.5	9.5	15.3	9.7	15.6	10.2
30	8.2	6.4	9.3	7.9	10.4	8.2	11.4	9.0	12.5	9.3	13.5	9.5	15.0	9.6	15.2	10.0
33	8.2	6.4	9.3	7.9	10.4	8.2	11.4	9.0	12.5	9.3	13.5	9.5	14.6	9.5	14.9	9.9
35	8.2	6.4	9.3	7.9	10.4	8.2	11.4	9.0	12.5	9.3	13.5	9.5	14.3	9.4	14.6	9.8
37	8.2	6.4	9.3	7.9	10.4	8.2	11.4	9.0	12.5	9.3	13.5	9.5	14.1	9.3	14.4	9.7
40	8.2	6.4	9.3	7.9	10.4	8.2	11.4	9.0	12.5	9.3	13.2	9.4	13.8	9.2	14.0	9.6
43	8.2	6.4	9.3	7.9	10.4	8.2	11.4	9.0	12.5	9.3	12.9	9.3	13.4	9.0	13.7	9.5
46	8.2	6.4	9.3	7.9	10.4	8.2	11.4	9.0	12.3	9.2	12.5	9.1	13.0	8.9	13.3	9.4

TC : Total Capacity kW.
SHC : Sensible Heat Capacity kW.

7-6. HIGH STATIC PRESSURE DUCT TYPE

COOLING CAPACITY

■ MODEL : ARXC36GATH

Outdoor temperature	Indoor temperature															
	20°CDB / 15 °CWB		23°CDB / 16 °CWB		24°CDB / 17 °CWB		26°CDB / 18 °CWB		27°CDB / 19 °CWB		28°CDB / 20 °CWB		30°CDB / 22 °CWB		32°CDB / 23 °CWB	
(°CDB)	TC	SHC	TC	SHC	TC	SHC	TC	SHC	TC	SHC	TC	SHC	TC	SHC	TC	SHC
10	7.4	6.0	8.3	7.4	9.3	7.7	10.2	8.5	11.2	8.7	12.1	8.9	14.0	9.3	15.0	10.0
15	7.4	6.0	8.3	7.4	9.3	7.7	10.2	8.5	11.2	8.7	12.1	8.9	14.0	9.3	15.0	10.0
21	7.4	6.0	8.3	7.4	9.3	7.7	10.2	8.5	11.2	8.7	12.1	8.9	14.0	9.3	14.6	9.8
23	7.4	6.0	8.3	7.4	9.3	7.7	10.2	8.5	11.2	8.7	12.1	8.9	14.0	9.3	14.4	9.7
25	7.4	6.0	8.3	7.4	9.3	7.7	10.2	8.5	11.2	8.7	12.1	8.9	13.9	9.2	14.2	9.7
27	7.4	6.0	8.3	7.4	9.3	7.7	10.2	8.5	11.2	8.7	12.1	8.9	13.7	9.1	14.0	9.6
30	7.4	6.0	8.3	7.4	9.3	7.7	10.2	8.5	11.2	8.7	12.1	8.9	13.4	9.0	13.6	9.5
33	7.4	6.0	8.3	7.4	9.3	7.7	10.2	8.5	11.2	8.7	12.1	8.9	13.1	8.9	13.3	9.4
35	7.4	6.0	8.3	7.4	9.3	7.7	10.2	8.5	11.2	8.7	12.1	8.9	12.8	8.8	13.1	9.3
37	7.4	6.0	8.3	7.4	9.3	7.7	10.2	8.5	11.2	8.7	12.1	8.9	12.6	8.7	12.9	9.2
40	7.4	6.0	8.3	7.4	9.3	7.7	10.2	8.5	11.2	8.7	11.8	8.8	12.3	8.6	12.6	9.1
43	7.4	6.0	8.3	7.4	9.3	7.7	10.2	8.5	11.2	8.7	11.5	8.7	12.0	8.5	12.2	9.0
46	7.4	6.0	8.3	7.4	9.3	7.7	10.2	8.5	11.0	8.6	11.2	8.6	11.7	8.4	11.9	8.9

■ MODEL : ARXC45GATH

Outdoor temperature	Indoor temperature															
	20°CDB / 15 °CWB		23°CDB / 16 °CWB		24°CDB / 17 °CWB		26°CDB / 18 °CWB		27°CDB / 19 °CWB		28°CDB / 20 °CWB		30°CDB / 22 °CWB		32°CDB / 23 °CWB	
(°CDB)	TC	SHC	TC	SHC	TC	SHC	TC	SHC	TC	SHC	TC	SHC	TC	SHC	TC	SHC
10	8.2	7.3	9.3	9.2	10.4	9.5	11.4	10.5	12.5	10.8	13.5	10.9	15.7	11.3	16.7	12.2
15	8.2	7.3	9.3	9.2	10.4	9.5	11.4	10.5	12.5	10.8	13.5	10.9	15.7	11.3	16.7	12.2
21	8.2	7.3	9.3	9.2	10.4	9.5	11.4	10.5	12.5	10.8	13.5	10.9	15.7	11.3	16.3	12.0
23	8.2	7.3	9.3	9.2	10.4	9.5	11.4	10.5	12.5	10.8	13.5	10.9	15.7	11.3	16.0	11.9
25	8.2	7.3	9.3	9.2	10.4	9.5	11.4	10.5	12.5	10.8	13.5	10.9	15.5	11.2	15.8	11.8
27	8.2	7.3	9.3	9.2	10.4	9.5	11.4	10.5	12.5	10.8	13.5	10.9	15.3	11.1	15.6	11.8
30	8.2	7.3	9.3	9.2	10.4	9.5	11.4	10.5	12.5	10.8	13.5	10.9	15.0	11.0	15.2	11.6
33	8.2	7.3	9.3	9.2	10.4	9.5	11.4	10.5	12.5	10.8	13.5	10.9	14.6	10.9	14.9	11.5
35	8.2	7.3	9.3	9.2	10.4	9.5	11.4	10.5	12.5	10.8	13.5	10.9	14.3	10.8	14.6	11.4
37	8.2	7.3	9.3	9.2	10.4	9.5	11.4	10.5	12.5	10.8	13.5	10.9	14.1	10.7	14.4	11.4
40	8.2	7.3	9.3	9.2	10.4	9.5	11.4	10.5	12.5	10.8	13.2	10.8	13.8	10.6	14.0	11.3
43	8.2	7.3	9.3	9.2	10.4	9.5	11.4	10.5	12.5	10.8	12.9	10.7	13.4	10.5	13.7	11.2
46	8.2	7.3	9.3	9.2	10.4	9.5	11.4	10.5	12.3	10.6	12.5	10.6	13.0	10.4	13.3	11.1

TC : Total Capacity kW.
SHC : Sensible Heat Capacity kW.

7-7. FLOOR / CEILING TYPE

COOLING CAPACITY

■ MODEL : AB∗A12GATH

Outdoor temperature	Indoor temperature															
	20°CDB / 15 °CWB		23°CDB / 16 °CWB		24°CDB / 17 °CWB		26°CDB / 18 °CWB		27°CDB / 19 °CWB		28°CDB / 20 °CWB		30°CDB / 22 °CWB		32°CDB / 23 °CWB	
(°CDB)	TC	SHC	TC	SHC	TC	SHC	TC	SHC	TC	SHC	TC	SHC	TC	SHC	TC	SHC
10	2.4	2.0	2.7	2.4	3.0	2.5	3.3	2.8	3.6	2.9	3.9	2.9	4.5	3.0	4.8	3.3
15	2.4	2.0	2.7	2.4	3.0	2.5	3.3	2.8	3.6	2.9	3.9	2.9	4.5	3.0	4.8	3.3
21	2.4	2.0	2.7	2.4	3.0	2.5	3.3	2.8	3.6	2.9	3.9	2.9	4.5	3.0	4.7	3.2
23	2.4	2.0	2.7	2.4	3.0	2.5	3.3	2.8	3.6	2.9	3.9	2.9	4.5	3.0	4.6	3.2
25	2.4	2.0	2.7	2.4	3.0	2.5	3.3	2.8	3.6	2.9	3.9	2.9	4.5	3.0	4.6	3.2
27	2.4	2.0	2.7	2.4	3.0	2.5	3.3	2.8	3.6	2.9	3.9	2.9	4.4	3.0	4.5	3.1
30	2.4	2.0	2.7	2.4	3.0	2.5	3.3	2.8	3.6	2.9	3.9	2.9	4.3	3.0	4.4	3.1
33	2.4	2.0	2.7	2.4	3.0	2.5	3.3	2.8	3.6	2.9	3.9	2.9	4.2	2.9	4.3	3.1
35	2.4	2.0	2.7	2.4	3.0	2.5	3.3	2.8	3.6	2.9	3.9	2.9	4.1	2.9	4.2	3.0
37	2.4	2.0	2.7	2.4	3.0	2.5	3.3	2.8	3.6	2.9	3.9	2.9	4.1	2.9	4.1	3.0
40	2.4	2.0	2.7	2.4	3.0	2.5	3.3	2.8	3.6	2.9	3.8	2.9	4.0	2.8	4.0	3.0
43	2.4	2.0	2.7	2.4	3.0	2.5	3.3	2.8	3.6	2.9	3.7	2.9	3.9	2.8	3.9	3.0
46	2.4	2.0	2.7	2.4	3.0	2.5	3.3	2.8	3.5	2.9	3.6	2.8	3.8	2.8	3.8	2.9

■ MODEL : AB∗A14GATH

Outdoor temperature	Indoor temperature															
	20°CDB / 15 °CWB		23°CDB / 16 °CWB		24°CDB / 17 °CWB		26°CDB / 18 °CWB		27°CDB / 19 °CWB		28°CDB / 20 °CWB		30°CDB / 22 °CWB		32°CDB / 23 °CWB	
(°CDB)	TC	SHC	TC	SHC	TC	SHC	TC	SHC	TC	SHC	TC	SHC	TC	SHC	TC	SHC
10	3.0	2.4	3.3	3.0	3.7	3.1	4.1	3.4	4.5	3.5	4.9	3.6	5.6	3.7	6.0	4.0
15	3.0	2.4	3.3	3.0	3.7	3.1	4.1	3.4	4.5	3.5	4.9	3.6	5.6	3.7	6.0	4.0
21	3.0	2.4	3.3	3.0	3.7	3.1	4.1	3.4	4.5	3.5	4.9	3.6	5.6	3.7	5.9	3.9
23	3.0	2.4	3.3	3.0	3.7	3.1	4.1	3.4	4.5	3.5	4.9	3.6	5.6	3.7	5.8	3.9
25	3.0	2.4	3.3	3.0	3.7	3.1	4.1	3.4	4.5	3.5	4.9	3.6	5.6	3.7	5.7	3.9
27	3.0	2.4	3.3	3.0	3.7	3.1	4.1	3.4	4.5	3.5	4.9	3.6	5.5	3.6	5.6	3.8
30	3.0	2.4	3.3	3.0	3.7	3.1	4.1	3.4	4.5	3.5	4.9	3.6	5.4	3.6	5.5	3.8
33	3.0	2.4	3.3	3.0	3.7	3.1	4.1	3.4	4.5	3.5	4.9	3.6	5.3	3.6	5.4	3.7
35	3.0	2.4	3.3	3.0	3.7	3.1	4.1	3.4	4.5	3.5	4.9	3.6	5.2	3.5	5.3	3.7
37	3.0	2.4	3.3	3.0	3.7	3.1	4.1	3.4	4.5	3.5	4.9	3.6	5.1	3.5	5.2	3.7
40	3.0	2.4	3.3	3.0	3.7	3.1	4.1	3.4	4.5	3.5	4.8	3.5	5.0	3.4	5.0	3.6
43	3.0	2.4	3.3	3.0	3.7	3.1	4.1	3.4	4.5	3.5	4.6	3.5	4.8	3.4	4.9	3.6
46	3.0	2.4	3.3	3.0	3.7	3.1	4.1	3.4	4.4	3.5	4.5	3.4	4.7	3.4	4.8	3.5

■ MODEL : AB∗A18GATH

Outdoor temperature	Indoor temperature															
	20°CDB / 15 °CWB		23°CDB / 16 °CWB		24°CDB / 17 °CWB		26°CDB / 18 °CWB		27°CDB / 19 °CWB		28°CDB / 20 °CWB		30°CDB / 22 °CWB		32°CDB / 23 °CWB	
(°CDB)	TC	SHC	TC	SHC	TC	SHC	TC	SHC	TC	SHC	TC	SHC	TC	SHC	TC	SHC
10	3.7	3.0	4.2	3.8	4.6	3.9	5.1	4.3	5.6	4.4	6.1	4.5	7.0	4.7	7.5	5.0
15	3.7	3.0	4.2	3.8	4.6	3.9	5.1	4.3	5.6	4.4	6.1	4.5	7.0	4.7	7.5	5.0
21	3.7	3.0	4.2	3.8	4.6	3.9	5.1	4.3	5.6	4.4	6.1	4.5	7.0	4.7	7.3	5.0
23	3.7	3.0	4.2	3.8	4.6	3.9	5.1	4.3	5.6	4.4	6.1	4.5	7.0	4.7	7.2	4.9
25	3.7	3.0	4.2	3.8	4.6	3.9	5.1	4.3	5.6	4.4	6.1	4.5	7.0	4.6	7.1	4.9
27	3.7	3.0	4.2	3.8	4.6	3.9	5.1	4.3	5.6	4.4	6.1	4.5	6.8	4.6	7.0	4.8
30	3.7	3.0	4.2	3.8	4.6	3.9	5.1	4.3	5.6	4.4	6.1	4.5	6.7	4.5	6.8	4.8
33	3.7	3.0	4.2	3.8	4.6	3.9	5.1	4.3	5.6	4.4	6.1	4.5	6.5	4.5	6.7	4.7
35	3.7	3.0	4.2	3.8	4.6	3.9	5.1	4.3	5.6	4.4	6.1	4.5	6.4	4.4	6.5	4.7
37	3.7	3.0	4.2	3.8	4.6	3.9	5.1	4.3	5.6	4.4	6.1	4.5	6.3	4.4	6.4	4.6
40	3.7	3.0	4.2	3.8	4.6	3.9	5.1	4.3	5.6	4.4	5.9	4.4	6.2	4.4	6.3	4.6
43	3.7	3.0	4.2	3.8	4.6	3.9	5.1	4.3	5.6	4.4	5.8	4.4	6.0	4.3	6.1	4.5
46	3.7	3.0	4.2	3.8	4.6	3.9	5.1	4.3	5.5	4.4	5.6	4.3	5.8	4.2	5.9	4.5

■ MODEL : AB∗A24GATH

Outdoor temperature	Indoor temperature															
	20°CDB / 15 °CWB		23°CDB / 16 °CWB		24°CDB / 17 °CWB		26°CDB / 18 °CWB		27°CDB / 19 °CWB		28°CDB / 20 °CWB		30°CDB / 22 °CWB		32°CDB / 23 °CWB	
(°CDB)	TC	SHC	TC	SHC	TC	SHC	TC	SHC	TC	SHC	TC	SHC	TC	SHC	TC	SHC
10	4.7	3.4	5.3	4.2	5.9	4.4	6.5	4.9	7.1	5.0	7.7	5.2	8.9	5.4	9.5	5.8
15	4.7	3.4	5.3	4.2	5.9	4.4	6.5	4.9	7.1	5.0	7.7	5.2	8.9	5.4	9.5	5.8
21	4.7	3.4	5.3	4.2	5.9	4.4	6.5	4.9	7.1	5.0	7.7	5.2	8.9	5.4	9.3	5.7
23	4.7	3.4	5.3	4.2	5.9	4.4	6.5	4.9	7.1	5.0	7.7	5.2	8.9	5.4	9.1	5.6
25	4.7	3.4	5.3	4.2	5.9	4.4	6.5	4.9	7.1	5.0	7.7	5.2	8.8	5.4	9.0	5.6
27	4.7	3.4	5.3	4.2	5.9	4.4	6.5	4.9	7.1	5.0	7.7	5.2	8.7	5.3	8.8	5.5
30	4.7	3.4	5.3	4.2	5.9	4.4	6.5	4.9	7.1	5.0	7.7	5.2	8.5	5.2	8.6	5.4
33	4.7	3.4	5.3	4.2	5.9	4.4	6.5	4.9	7.1	5.0	7.7	5.2	8.3	5.2	8.4	5.4
35	4.7	3.4	5.3	4.2	5.9	4.4	6.5	4.9	7.1	5.0	7.7	5.2	8.1	5.1	8.3	5.3
37	4.7	3.4	5.3	4.2	5.9	4.4	6.5	4.9	7.1	5.0	7.7	5.2	8.0	5.0	8.2	5.3
40	4.7	3.4	5.3	4.2	5.9	4.4	6.5	4.9	7.1	5.0	7.5	5.1	7.8	5.0	8.0	5.2
43	4.7	3.4	5.3	4.2	5.9	4.4	6.5	4.9	7.1	5.0	7.3	5.0	7.6	4.9	7.8	5.1
46	4.7	3.4	5.3	4.2	5.9	4.4	6.5	4.9	7.0	5.0	7.1	4.9	7.4	4.8	7.5	5.0

TC : Total Capacity kW.
SHC : Sensible Heat Capacity kW.

7-8. CEILING TYPE

COOLING CAPACITY

■ MODEL : AB∗A30GATH

Outdoor temperature	Indoor temperature															
	20°CDB / 15 °CWB		23°CDB / 16 °CWB		24°CDB / 17 °CWB		26°CDB / 18 °CWB		27°CDB / 19 °CWB		28°CDB / 20 °CWB		30°CDB / 22 °CWB		32°CDB / 23 °CWB	
(°CDB)	TC	SHC	TC	SHC	TC	SHC	TC	SHC	TC	SHC	TC	SHC	TC	SHC	TC	SHC
10	5.9	4.9	6.7	6.1	7.5	6.3	8.2	7.0	9.0	7.1	9.7	7.3	11.3	7.5	12.1	8.1
15	5.9	4.9	6.7	6.1	7.5	6.3	8.2	7.0	9.0	7.1	9.7	7.3	11.3	7.5	12.1	8.1
21	5.9	4.9	6.7	6.1	7.5	6.3	8.2	7.0	9.0	7.1	9.7	7.3	11.3	7.5	11.7	8.0
23	5.9	4.9	6.7	6.1	7.5	6.3	8.2	7.0	9.0	7.1	9.7	7.3	11.3	7.5	11.5	7.9
25	5.9	4.9	6.7	6.1	7.5	6.3	8.2	7.0	9.0	7.1	9.7	7.3	11.2	7.5	11.4	7.9
27	5.9	4.9	6.7	6.1	7.5	6.3	8.2	7.0	9.0	7.1	9.7	7.3	11.0	7.4	11.2	7.8
30	5.9	4.9	6.7	6.1	7.5	6.3	8.2	7.0	9.0	7.1	9.7	7.3	10.8	7.3	11.0	7.7
33	5.9	4.9	6.7	6.1	7.5	6.3	8.2	7.0	9.0	7.1	9.7	7.3	10.5	7.3	10.7	7.6
35	5.9	4.9	6.7	6.1	7.5	6.3	8.2	7.0	9.0	7.1	9.7	7.3	10.3	7.2	10.5	7.6
37	5.9	4.9	6.7	6.1	7.5	6.3	8.2	7.0	9.0	7.1	9.7	7.3	10.2	7.1	10.4	7.5
40	5.9	4.9	6.7	6.1	7.5	6.3	8.2	7.0	9.0	7.1	9.5	7.2	9.9	7.0	10.1	7.4
43	5.9	4.9	6.7	6.1	7.5	6.3	8.2	7.0	9.0	7.1	9.3	7.1	9.6	7.0	9.8	7.4
46	5.9	4.9	6.7	6.1	7.5	6.3	8.2	7.0	8.8	7.1	9.0	7.0	9.4	6.9	9.5	7.3

■ MODEL : AB∗A36GATH

Outdoor temperature	Indoor temperature															
	20°CDB / 15 °CWB		23°CDB / 16 °CWB		24°CDB / 17 °CWB		26°CDB / 18 °CWB		27°CDB / 19 °CWB		28°CDB / 20 °CWB		30°CDB / 22 °CWB		32°CDB / 23 °CWB	
(°CDB)	TC	SHC	TC	SHC	TC	SHC	TC	SHC	TC	SHC	TC	SHC	TC	SHC	TC	SHC
10	7.4	5.6	8.3	6.9	9.3	7.2	10.2	7.9	11.2	8.2	12.1	8.3	14.0	8.7	15.0	9.3
15	7.4	5.6	8.3	6.9	9.3	7.2	10.2	7.9	11.2	8.2	12.1	8.3	14.0	8.7	15.0	9.3
21	7.4	5.6	8.3	6.9	9.3	7.2	10.2	7.9	11.2	8.2	12.1	8.3	14.0	8.7	14.6	9.2
23	7.4	5.6	8.3	6.9	9.3	7.2	10.2	7.9	11.2	8.2	12.1	8.3	14.0	8.7	14.4	9.1
25	7.4	5.6	8.3	6.9	9.3	7.2	10.2	7.9	11.2	8.2	12.1	8.3	13.9	8.7	14.2	9.0
27	7.4	5.6	8.3	6.9	9.3	7.2	10.2	7.9	11.2	8.2	12.1	8.3	13.7	8.6	14.0	8.9
30	7.4	5.6	8.3	6.9	9.3	7.2	10.2	7.9	11.2	8.2	12.1	8.3	13.4	8.5	13.6	8.8
33	7.4	5.6	8.3	6.9	9.3	7.2	10.2	7.9	11.2	8.2	12.1	8.3	13.1	8.3	13.3	8.7
35	7.4	5.6	8.3	6.9	9.3	7.2	10.2	7.9	11.2	8.2	12.1	8.3	12.8	8.2	13.1	8.6
37	7.4	5.6	8.3	6.9	9.3	7.2	10.2	7.9	11.2	8.2	12.1	8.3	12.6	8.2	12.9	8.6
40	7.4	5.6	8.3	6.9	9.3	7.2	10.2	7.9	11.2	8.2	11.8	8.3	12.3	8.1	12.6	8.5
43	7.4	5.6	8.3	6.9	9.3	7.2	10.2	7.9	11.2	8.2	11.5	8.1	12.0	8.0	12.2	8.3
46	7.4	5.6	8.3	6.9	9.3	7.2	10.2	7.9	11.0	8.1	11.2	8.0	11.7	7.8	11.9	8.2

■ MODEL : AB∗A45GATH

Outdoor temperature	Indoor temperature															
	20°CDB / 15 °CWB		23°CDB / 16 °CWB		24°CDB / 17 °CWB		26°CDB / 18 °CWB		27°CDB / 19 °CWB		28°CDB / 20 °CWB		30°CDB / 22 °CWB		32°CDB / 23 °CWB	
(°CDB)	TC	SHC	TC	SHC	TC	SHC	TC	SHC	TC	SHC	TC	SHC	TC	SHC	TC	SHC
10	8.2	6.4	9.3	7.9	10.4	8.2	11.4	9.1	12.5	9.4	13.5	9.6	15.7	10.0	16.7	10.7
15	8.2	6.4	9.3	7.9	10.4	8.2	11.4	9.1	12.5	9.4	13.5	9.6	15.7	10.0	16.7	10.7
21	8.2	6.4	9.3	7.9	10.4	8.2	11.4	9.1	12.5	9.4	13.5	9.6	15.7	10.0	16.3	10.6
23	8.2	6.4	9.3	7.9	10.4	8.2	11.4	9.1	12.5	9.4	13.5	9.6	15.7	10.0	16.0	10.4
25	8.2	6.4	9.3	7.9	10.4	8.2	11.4	9.1	12.5	9.4	13.5	9.6	15.5	9.9	15.8	10.3
27	8.2	6.4	9.3	7.9	10.4	8.2	11.4	9.1	12.5	9.4	13.5	9.6	15.3	9.8	15.6	10.3
30	8.2	6.4	9.3	7.9	10.4	8.2	11.4	9.1	12.5	9.4	13.5	9.6	15.0	9.7	15.2	10.1
33	8.2	6.4	9.3	7.9	10.4	8.2	11.4	9.1	12.5	9.4	13.5	9.6	14.6	9.6	14.9	10.0
35	8.2	6.4	9.3	7.9	10.4	8.2	11.4	9.1	12.5	9.4	13.5	9.6	14.3	9.4	14.6	9.9
37	8.2	6.4	9.3	7.9	10.4	8.2	11.4	9.1	12.5	9.4	13.5	9.6	14.1	9.4	14.4	9.8
40	8.2	6.4	9.3	7.9	10.4	8.2	11.4	9.1	12.5	9.4	13.2	9.5	13.8	9.3	14.0	9.7
43	8.2	6.4	9.3	7.9	10.4	8.2	11.4	9.1	12.5	9.4	12.9	9.3	13.4	9.1	13.7	9.6
46	8.2	6.4	9.3	7.9	10.4	8.2	11.4	9.1	12.3	9.3	12.5	9.2	13.0	9.0	13.3	9.5

■ MODEL : AB∗A54GATH

Outdoor temperature	Indoor temperature															
	20°CDB / 15 °CWB		23°CDB / 16 °CWB		24°CDB / 17 °CWB		26°CDB / 18 °CWB		27°CDB / 19 °CWB		28°CDB / 20 °CWB		30°CDB / 22 °CWB		32°CDB / 23 °CWB	
(°CDB)	TC	SHC	TC	SHC	TC	SHC	TC	SHC	TC	SHC	TC	SHC	TC	SHC	TC	SHC
10	9.2	7.2	10.4	8.9	11.6	9.3	12.8	10.3	14.0	10.5	15.2	10.8	17.6	11.2	18.8	12.0
15	9.2	7.2	10.4	8.9	11.6	9.3	12.8	10.3	14.0	10.5	15.2	10.8	17.6	11.2	18.8	12.0
21	9.2	7.2	10.4	8.9	11.6	9.3	12.8	10.3	14.0	10.5	15.2	10.8	17.6	11.2	18.3	11.9
23	9.2	7.2	10.4	8.9	11.6	9.3	12.8	10.3	14.0	10.5	15.2	10.8	17.6	11.2	18.0	11.7
25	9.2	7.2	10.4	8.9	11.6	9.3	12.8	10.3	14.0	10.5	15.2	10.8	17.4	11.1	17.7	11.6
27	9.2	7.2	10.4	8.9	11.6	9.3	12.8	10.3	14.0	10.5	15.2	10.8	17.1	11.0	17.5	11.5
30	9.2	7.2	10.4	8.9	11.6	9.3	12.8	10.3	14.0	10.5	15.2	10.8	16.8	10.9	17.1	11.4
33	9.2	7.2	10.4	8.9	11.6	9.3	12.8	10.3	14.0	10.5	15.2	10.8	16.4	10.7	16.7	11.2
35	9.2	7.2	10.4	8.9	11.6	9.3	12.8	10.3	14.0	10.5	15.2	10.8	16.1	10.6	16.4	11.1
37	9.2	7.2	10.4	8.9	11.6	9.3	12.8	10.3	14.0	10.5	15.2	10.8	15.8	10.5	16.1	11.1
40	9.2	7.2	10.4	8.9	11.6	9.3	12.8	10.3	14.0	10.5	14.8	10.6	15.4	10.4	15.7	10.9
43	9.2	7.2	10.4	8.9	11.6	9.3	12.8	10.3	14.0	10.5	14.4	10.5	15.0	10.3	15.3	10.8
46	9.2	7.2	10.4	8.9	11.6	9.3	12.8	10.3	13.8	10.5	14.0	10.3	14.6	10.1	14.9	10.6

TC : Total Capacity kW.
SHC : Sensible Heat Capacity kW.

7-9. WALL MOUNTED TYPE (EEV external model)

COOLING CAPACITY

■ MODEL : AS∗E04GACH

Outdoor temperature	Indoor temperature															
	20°CDB / 15 °CWB		23°CDB / 16 °CWB		24°CDB / 17 °CWB		26°CDB / 18 °CWB		27°CDB / 19 °CWB		28°CDB / 20 °CWB		30°CDB / 22 °CWB		32°CDB / 23 °CWB	
(°CDB)	TC	SHC	TC	SHC	TC	SHC	TC	SHC	TC	SHC	TC	SHC	TC	SHC	TC	SHC
10	0.7	0.6	0.8	0.7	0.9	0.8	1.0	0.9	1.1	1.0	1.2	1.0	1.4	1.0	1.5	1.1
15	0.7	0.6	0.8	0.7	0.9	0.8	1.0	0.9	1.1	1.0	1.2	1.0	1.4	1.0	1.5	1.1
21	0.7	0.6	0.8	0.7	0.9	0.8	1.0	0.9	1.1	1.0	1.2	1.0	1.4	1.0	1.4	1.0
23	0.7	0.6	0.8	0.7	0.9	0.8	1.0	0.9	1.1	1.0	1.2	1.0	1.4	1.0	1.4	1.0
25	0.7	0.6	0.8	0.7	0.9	0.8	1.0	0.9	1.1	1.0	1.2	1.0	1.4	1.0	1.4	1.0
27	0.7	0.6	0.8	0.7	0.9	0.8	1.0	0.9	1.1	1.0	1.2	1.0	1.3	0.9	1.4	1.0
30	0.7	0.6	0.8	0.7	0.9	0.8	1.0	0.9	1.1	1.0	1.2	1.0	1.3	0.9	1.3	0.9
33	0.7	0.6	0.8	0.7	0.9	0.8	1.0	0.9	1.1	1.0	1.2	1.0	1.3	0.9	1.3	0.9
35	0.7	0.6	0.8	0.7	0.9	0.8	1.0	0.9	1.1	1.0	1.2	1.0	1.3	0.9	1.3	0.9
37	0.7	0.6	0.8	0.7	0.9	0.8	1.0	0.9	1.1	1.0	1.2	1.0	1.2	0.9	1.3	0.9
40	0.7	0.6	0.8	0.7	0.9	0.8	1.0	0.9	1.1	1.0	1.2	1.0	1.2	0.9	1.2	0.9
43	0.7	0.6	0.8	0.7	0.9	0.8	1.0	0.9	1.1	1.0	1.1	0.9	1.2	0.9	1.2	0.9
46	0.7	0.6	0.8	0.7	0.9	0.8	1.0	0.9	1.1	1.0	1.1	0.9	1.1	0.8	1.2	0.9

■ MODEL : AS∗E07GACH

Outdoor temperature	Indoor temperature															
	20°CDB / 15 °CWB		23°CDB / 16 °CWB		24°CDB / 17 °CWB		26°CDB / 18 °CWB		27°CDB / 19 °CWB		28°CDB / 20 °CWB		30°CDB / 22 °CWB		32°CDB / 23 °CWB	
(°CDB)	TC	SHC	TC	SHC	TC	SHC	TC	SHC	TC	SHC	TC	SHC	TC	SHC	TC	SHC
10	1.4	1.2	1.6	1.6	1.8	1.6	2.0	1.8	2.2	1.8	2.4	1.9	2.8	1.9	2.9	2.1
15	1.4	1.2	1.6	1.6	1.8	1.6	2.0	1.8	2.2	1.8	2.4	1.9	2.8	1.9	2.9	2.1
21	1.4	1.2	1.6	1.6	1.8	1.6	2.0	1.8	2.2	1.8	2.4	1.9	2.8	1.9	2.9	2.0
23	1.4	1.2	1.6	1.6	1.8	1.6	2.0	1.8	2.2	1.8	2.4	1.9	2.8	1.9	2.8	2.0
25	1.4	1.2	1.6	1.6	1.8	1.6	2.0	1.8	2.2	1.8	2.4	1.9	2.7	1.9	2.8	2.0
27	1.4	1.2	1.6	1.6	1.8	1.6	2.0	1.8	2.2	1.8	2.4	1.9	2.7	1.9	2.7	2.0
30	1.4	1.2	1.6	1.6	1.8	1.6	2.0	1.8	2.2	1.8	2.4	1.9	2.6	1.9	2.7	2.0
33	1.4	1.2	1.6	1.6	1.8	1.6	2.0	1.8	2.2	1.8	2.4	1.9	2.6	1.9	2.6	2.0
35	1.4	1.2	1.6	1.6	1.8	1.6	2.0	1.8	2.2	1.8	2.4	1.9	2.5	1.8	2.6	1.9
37	1.4	1.2	1.6	1.6	1.8	1.6	2.0	1.8	2.2	1.8	2.4	1.9	2.5	1.8	2.5	1.9
40	1.4	1.2	1.6	1.6	1.8	1.6	2.0	1.8	2.2	1.8	2.3	1.8	2.4	1.8	2.5	1.9
43	1.4	1.2	1.6	1.6	1.8	1.6	2.0	1.8	2.2	1.8	2.3	1.8	2.4	1.8	2.4	1.9
46	1.4	1.2	1.6	1.6	1.8	1.6	2.0	1.8	2.2	1.8	2.2	1.8	2.3	1.8	2.3	1.9

■ MODEL : AS∗E09GACH

Outdoor temperature	Indoor temperature															
	20°CDB / 15 °CWB		23°CDB / 16 °CWB		24°CDB / 17 °CWB		26°CDB / 18 °CWB		27°CDB / 19 °CWB		28°CDB / 20 °CWB		30°CDB / 22 °CWB		32°CDB / 23 °CWB	
(°CDB)	TC	SHC	TC	SHC	TC	SHC	TC	SHC	TC	SHC	TC	SHC	TC	SHC	TC	SHC
10	1.8	1.5	2.1	1.9	2.3	1.9	2.6	2.1	2.8	2.2	3.0	2.2	3.5	2.3	3.8	2.5
15	1.8	1.5	2.1	1.9	2.3	1.9	2.6	2.1	2.8	2.2	3.0	2.2	3.5	2.3	3.8	2.5
21	1.8	1.5	2.1	1.9	2.3	1.9	2.6	2.1	2.8	2.2	3.0	2.2	3.5	2.3	3.7	2.5
23	1.8	1.5	2.1	1.9	2.3	1.9	2.6	2.1	2.8	2.2	3.0	2.2	3.5	2.3	3.6	2.5
25	1.8	1.5	2.1	1.9	2.3	1.9	2.6	2.1	2.8	2.2	3.0	2.2	3.5	2.3	3.5	2.4
27	1.8	1.5	2.1	1.9	2.3	1.9	2.6	2.1	2.8	2.2	3.0	2.2	3.4	2.3	3.5	2.4
30	1.8	1.5	2.1	1.9	2.3	1.9	2.6	2.1	2.8	2.2	3.0	2.2	3.4	2.3	3.4	2.4
33	1.8	1.5	2.1	1.9	2.3	1.9	2.6	2.1	2.8	2.2	3.0	2.2	3.3	2.2	3.3	2.4
35	1.8	1.5	2.1	1.9	2.3	1.9	2.6	2.1	2.8	2.2	3.0	2.2	3.2	2.2	3.3	2.3
37	1.8	1.5	2.1	1.9	2.3	1.9	2.6	2.1	2.8	2.2	3.0	2.2	3.2	2.2	3.2	2.3
40	1.8	1.5	2.1	1.9	2.3	1.9	2.6	2.1	2.8	2.2	3.0	2.2	3.1	2.2	3.1	2.3
43	1.8	1.5	2.1	1.9	2.3	1.9	2.6	2.1	2.8	2.2	2.9	2.2	3.0	2.2	3.1	2.3
46	1.8	1.5	2.1	1.9	2.3	1.9	2.6	2.1	2.8	2.2	2.8	2.2	2.9	2.1	3.0	2.2

TC : Total Capacity kW.
SHC : Sensible Heat Capacity kW.

COOLING CAPACITY

■ MODEL : AS∗E12GACH

Outdoor temperature	Indoor temperature															
	20°CDB / 15 °CWB		23°CDB / 16 °CWB		24°CDB / 17 °CWB		26°CDB / 18 °CWB		27°CDB / 19 °CWB		28°CDB / 20 °CWB		30°CDB / 22 °CWB		32°CDB / 23 °CWB	
(°CDB)	TC	SHC	TC	SHC	TC	SHC	TC	SHC	TC	SHC	TC	SHC	TC	SHC	TC	SHC
10	2.4	1.9	2.7	2.3	3.0	2.4	3.3	2.7	3.6	2.7	3.9	2.8	4.5	2.9	4.8	3.1
15	2.4	1.9	2.7	2.3	3.0	2.4	3.3	2.7	3.6	2.7	3.9	2.8	4.5	2.9	4.8	3.1
21	2.4	1.9	2.7	2.3	3.0	2.4	3.3	2.7	3.6	2.7	3.9	2.8	4.5	2.9	4.7	3.1
23	2.4	1.9	2.7	2.3	3.0	2.4	3.3	2.7	3.6	2.7	3.9	2.8	4.5	2.9	4.6	3.0
25	2.4	1.9	2.7	2.3	3.0	2.4	3.3	2.7	3.6	2.7	3.9	2.8	4.5	2.9	4.6	3.0
27	2.4	1.9	2.7	2.3	3.0	2.4	3.3	2.7	3.6	2.7	3.9	2.8	4.4	2.8	4.5	3.0
30	2.4	1.9	2.7	2.3	3.0	2.4	3.3	2.7	3.6	2.7	3.9	2.8	4.3	2.8	4.4	2.9
33	2.4	1.9	2.7	2.3	3.0	2.4	3.3	2.7	3.6	2.7	3.9	2.8	4.2	2.8	4.3	2.9
35	2.4	1.9	2.7	2.3	3.0	2.4	3.3	2.7	3.6	2.7	3.9	2.8	4.1	2.7	4.2	2.9
37	2.4	1.9	2.7	2.3	3.0	2.4	3.3	2.7	3.6	2.7	3.9	2.8	4.1	2.7	4.1	2.9
40	2.4	1.9	2.7	2.3	3.0	2.4	3.3	2.7	3.6	2.7	3.8	2.8	4.0	2.7	4.0	2.8
43	2.4	1.9	2.7	2.3	3.0	2.4	3.3	2.7	3.6	2.7	3.7	2.7	3.9	2.7	3.9	2.8
46	2.4	1.9	2.7	2.3	3.0	2.4	3.3	2.7	3.5	2.7	3.6	2.7	3.8	2.6	3.8	2.8

■ MODEL : AS∗E14GACH

Outdoor temperature	Indoor temperature															
	20°CDB / 15 °CWB		23°CDB / 16 °CWB		24°CDB / 17 °CWB		26°CDB / 18 °CWB		27°CDB / 19 °CWB		28°CDB / 20 °CWB		30°CDB / 22 °CWB		32°CDB / 23 °CWB	
(°CDB)	TC	SHC	TC	SHC	TC	SHC	TC	SHC	TC	SHC	TC	SHC	TC	SHC	TC	SHC
10	3.0	2.3	3.3	2.8	3.7	3.0	4.1	3.3	4.5	3.4	4.9	3.4	5.6	3.6	6.0	3.8
15	3.0	2.3	3.3	2.8	3.7	3.0	4.1	3.3	4.5	3.4	4.9	3.4	5.6	3.6	6.0	3.8
21	3.0	2.3	3.3	2.8	3.7	3.0	4.1	3.3	4.5	3.4	4.9	3.4	5.6	3.6	5.9	3.8
23	3.0	2.3	3.3	2.8	3.7	3.0	4.1	3.3	4.5	3.4	4.9	3.4	5.6	3.6	5.8	3.7
25	3.0	2.3	3.3	2.8	3.7	3.0	4.1	3.3	4.5	3.4	4.9	3.4	5.6	3.6	5.7	3.7
27	3.0	2.3	3.3	2.8	3.7	3.0	4.1	3.3	4.5	3.4	4.9	3.4	5.5	3.5	5.6	3.7
30	3.0	2.3	3.3	2.8	3.7	3.0	4.1	3.3	4.5	3.4	4.9	3.4	5.4	3.5	5.5	3.6
33	3.0	2.3	3.3	2.8	3.7	3.0	4.1	3.3	4.5	3.4	4.9	3.4	5.3	3.4	5.4	3.6
35	3.0	2.3	3.3	2.8	3.7	3.0	4.1	3.3	4.5	3.4	4.9	3.4	5.2	3.4	5.3	3.6
37	3.0	2.3	3.3	2.8	3.7	3.0	4.1	3.3	4.5	3.4	4.9	3.4	5.1	3.4	5.2	3.5
40	3.0	2.3	3.3	2.8	3.7	3.0	4.1	3.3	4.5	3.4	4.8	3.4	5.0	3.3	5.0	3.5
43	3.0	2.3	3.3	2.8	3.7	3.0	4.1	3.3	4.5	3.4	4.6	3.3	4.8	3.3	4.9	3.4
46	3.0	2.3	3.3	2.8	3.7	3.0	4.1	3.3	4.4	3.3	4.5	3.3	4.7	3.2	4.8	3.4

TC : Total Capacity kW.
SHC : Sensible Heat Capacity kW.

7-10. WALL MOUNTED TYPE

COOLING CAPACITY

■ MODEL : AS∗A04GACH

Outdoor temperature	Indoor temperature															
	20°CDB / 15 °CWB		23°CDB / 16 °CWB		24°CDB / 17 °CWB		26°CDB / 18 °CWB		27°CDB / 19 °CWB		28°CDB / 20 °CWB		30°CDB / 22 °CWB		32°CDB / 23 °CWB	
(°CDB)	TC	SHC	TC	SHC	TC	SHC	TC	SHC	TC	SHC	TC	SHC	TC	SHC	TC	SHC
10	0.7	0.6	0.8	0.7	0.9	0.8	1.0	0.9	1.1	1.0	1.2	1.0	1.4	1.0	1.5	1.1
15	0.7	0.6	0.8	0.7	0.9	0.8	1.0	0.9	1.1	1.0	1.2	1.0	1.4	1.0	1.5	1.1
21	0.7	0.6	0.8	0.7	0.9	0.8	1.0	0.9	1.1	1.0	1.2	1.0	1.4	1.0	1.4	1.0
23	0.7	0.6	0.8	0.7	0.9	0.8	1.0	0.9	1.1	1.0	1.2	1.0	1.4	1.0	1.4	1.0
25	0.7	0.6	0.8	0.7	0.9	0.8	1.0	0.9	1.1	1.0	1.2	1.0	1.4	1.0	1.4	1.0
27	0.7	0.6	0.8	0.7	0.9	0.8	1.0	0.9	1.1	1.0	1.2	1.0	1.3	0.9	1.4	1.0
30	0.7	0.6	0.8	0.7	0.9	0.8	1.0	0.9	1.1	1.0	1.2	1.0	1.3	0.9	1.3	0.9
33	0.7	0.6	0.8	0.7	0.9	0.8	1.0	0.9	1.1	1.0	1.2	1.0	1.3	0.9	1.3	0.9
35	0.7	0.6	0.8	0.7	0.9	0.8	1.0	0.9	1.1	1.0	1.2	1.0	1.3	0.9	1.3	0.9
37	0.7	0.6	0.8	0.7	0.9	0.8	1.0	0.9	1.1	1.0	1.2	1.0	1.2	0.9	1.3	0.9
40	0.7	0.6	0.8	0.7	0.9	0.8	1.0	0.9	1.1	1.0	1.2	1.0	1.2	0.9	1.2	0.9
43	0.7	0.6	0.8	0.7	0.9	0.8	1.0	0.9	1.1	1.0	1.1	0.9	1.2	0.9	1.2	0.9
46	0.7	0.6	0.8	0.7	0.9	0.8	1.0	0.9	1.1	1.0	1.1	0.9	1.1	0.8	1.2	0.9

■ MODEL : AS∗A07GACH

Outdoor temperature	Indoor temperature															
	20°CDB / 15 °CWB		23°CDB / 16 °CWB		24°CDB / 17 °CWB		26°CDB / 18 °CWB		27°CDB / 19 °CWB		28°CDB / 20 °CWB		30°CDB / 22 °CWB		32°CDB / 23 °CWB	
(°CDB)	TC	SHC	TC	SHC	TC	SHC	TC	SHC	TC	SHC	TC	SHC	TC	SHC	TC	SHC
10	1.4	1.2	1.6	1.6	1.8	1.6	2.0	1.8	2.2	1.8	2.4	1.9	2.8	1.9	2.9	2.1
15	1.4	1.2	1.6	1.6	1.8	1.6	2.0	1.8	2.2	1.8	2.4	1.9	2.8	1.9	2.9	2.1
21	1.4	1.2	1.6	1.6	1.8	1.6	2.0	1.8	2.2	1.8	2.4	1.9	2.8	1.9	2.9	2.0
23	1.4	1.2	1.6	1.6	1.8	1.6	2.0	1.8	2.2	1.8	2.4	1.9	2.8	1.9	2.8	2.0
25	1.4	1.2	1.6	1.6	1.8	1.6	2.0	1.8	2.2	1.8	2.4	1.9	2.7	1.9	2.8	2.0
27	1.4	1.2	1.6	1.6	1.8	1.6	2.0	1.8	2.2	1.8	2.4	1.9	2.7	1.9	2.7	2.0
30	1.4	1.2	1.6	1.6	1.8	1.6	2.0	1.8	2.2	1.8	2.4	1.9	2.6	1.9	2.7	2.0
33	1.4	1.2	1.6	1.6	1.8	1.6	2.0	1.8	2.2	1.8	2.4	1.9	2.6	1.9	2.6	2.0
35	1.4	1.2	1.6	1.6	1.8	1.6	2.0	1.8	2.2	1.8	2.4	1.9	2.5	1.8	2.6	1.9
37	1.4	1.2	1.6	1.6	1.8	1.6	2.0	1.8	2.2	1.8	2.4	1.9	2.5	1.8	2.5	1.9
40	1.4	1.2	1.6	1.6	1.8	1.6	2.0	1.8	2.2	1.8	2.3	1.8	2.4	1.8	2.5	1.9
43	1.4	1.2	1.6	1.6	1.8	1.6	2.0	1.8	2.2	1.8	2.3	1.8	2.4	1.8	2.4	1.9
46	1.4	1.2	1.6	1.6	1.8	1.6	2.0	1.8	2.2	1.8	2.2	1.8	2.3	1.8	2.3	1.9

■ MODEL : AS∗A09GACH

Outdoor temperature	Indoor temperature															
	20°CDB / 15 °CWB		23°CDB / 16 °CWB		24°CDB / 17 °CWB		26°CDB / 18 °CWB		27°CDB / 19 °CWB		28°CDB / 20 °CWB		30°CDB / 22 °CWB		32°CDB / 23 °CWB	
(°CDB)	TC	SHC	TC	SHC	TC	SHC	TC	SHC	TC	SHC	TC	SHC	TC	SHC	TC	SHC
10	1.8	1.5	2.1	1.9	2.3	1.9	2.6	2.1	2.8	2.2	3.0	2.2	3.5	2.3	3.8	2.5
15	1.8	1.5	2.1	1.9	2.3	1.9	2.6	2.1	2.8	2.2	3.0	2.2	3.5	2.3	3.8	2.5
21	1.8	1.5	2.1	1.9	2.3	1.9	2.6	2.1	2.8	2.2	3.0	2.2	3.5	2.3	3.7	2.5
23	1.8	1.5	2.1	1.9	2.3	1.9	2.6	2.1	2.8	2.2	3.0	2.2	3.5	2.3	3.6	2.5
25	1.8	1.5	2.1	1.9	2.3	1.9	2.6	2.1	2.8	2.2	3.0	2.2	3.5	2.3	3.5	2.4
27	1.8	1.5	2.1	1.9	2.3	1.9	2.6	2.1	2.8	2.2	3.0	2.2	3.4	2.3	3.5	2.4
30	1.8	1.5	2.1	1.9	2.3	1.9	2.6	2.1	2.8	2.2	3.0	2.2	3.4	2.3	3.4	2.4
33	1.8	1.5	2.1	1.9	2.3	1.9	2.6	2.1	2.8	2.2	3.0	2.2	3.3	2.2	3.3	2.4
35	1.8	1.5	2.1	1.9	2.3	1.9	2.6	2.1	2.8	2.2	3.0	2.2	3.2	2.2	3.3	2.3
37	1.8	1.5	2.1	1.9	2.3	1.9	2.6	2.1	2.8	2.2	3.0	2.2	3.2	2.2	3.2	2.3
40	1.8	1.5	2.1	1.9	2.3	1.9	2.6	2.1	2.8	2.2	3.0	2.2	3.1	2.2	3.1	2.3
43	1.8	1.5	2.1	1.9	2.3	1.9	2.6	2.1	2.8	2.2	2.9	2.2	3.0	2.2	3.1	2.3
46	1.8	1.5	2.1	1.9	2.3	1.9	2.6	2.1	2.8	2.2	2.8	2.2	2.9	2.1	3.0	2.2

TC : Total Capacity kW.
SHC : Sensible Heat Capacity kW.

MODEL SELECTION

COOLING CAPACITY

■ MODEL : AS∗A12GACH

Outdoor temperature	Indoor temperature															
	20°CDB / 15 °CWB		23°CDB / 16 °CWB		24°CDB / 17 °CWB		26°CDB / 18 °CWB		27°CDB / 19 °CWB		28°CDB / 20 °CWB		30°CDB / 22 °CWB		32°CDB / 23 °CWB	
(°CDB)	TC	SHC	TC	SHC	TC	SHC	TC	SHC	TC	SHC	TC	SHC	TC	SHC	TC	SHC
10	2.4	1.8	2.7	2.3	3.0	2.3	3.3	2.6	3.6	2.7	3.9	2.7	4.5	2.8	4.8	3.0
15	2.4	1.8	2.7	2.3	3.0	2.3	3.3	2.6	3.6	2.7	3.9	2.7	4.5	2.8	4.8	3.0
21	2.4	1.8	2.7	2.3	3.0	2.3	3.3	2.6	3.6	2.7	3.9	2.7	4.5	2.8	4.7	3.0
23	2.4	1.8	2.7	2.3	3.0	2.3	3.3	2.6	3.6	2.7	3.9	2.7	4.5	2.8	4.6	3.0
25	2.4	1.8	2.7	2.3	3.0	2.3	3.3	2.6	3.6	2.7	3.9	2.7	4.5	2.8	4.6	2.9
27	2.4	1.8	2.7	2.3	3.0	2.3	3.3	2.6	3.6	2.7	3.9	2.7	4.4	2.8	4.5	2.9
30	2.4	1.8	2.7	2.3	3.0	2.3	3.3	2.6	3.6	2.7	3.9	2.7	4.3	2.8	4.4	2.9
33	2.4	1.8	2.7	2.3	3.0	2.3	3.3	2.6	3.6	2.7	3.9	2.7	4.2	2.7	4.3	2.8
35	2.4	1.8	2.7	2.3	3.0	2.3	3.3	2.6	3.6	2.7	3.9	2.7	4.1	2.7	4.2	2.8
37	2.4	1.8	2.7	2.3	3.0	2.3	3.3	2.6	3.6	2.7	3.9	2.7	4.1	2.7	4.1	2.8
40	2.4	1.8	2.7	2.3	3.0	2.3	3.3	2.6	3.6	2.7	3.8	2.7	4.0	2.6	4.0	2.8
43	2.4	1.8	2.7	2.3	3.0	2.3	3.3	2.6	3.6	2.7	3.7	2.6	3.9	2.6	3.9	2.7
46	2.4	1.8	2.7	2.3	3.0	2.3	3.3	2.6	3.5	2.6	3.6	2.6	3.8	2.6	3.8	2.7

■ MODEL : AS∗A14GACH

Outdoor temperature	Indoor temperature															
	20°CDB / 15 °CWB		23°CDB / 16 °CWB		24°CDB / 17 °CWB		26°CDB / 18 °CWB		27°CDB / 19 °CWB		28°CDB / 20 °CWB		30°CDB / 22 °CWB		32°CDB / 23 °CWB	
(°CDB)	TC	SHC	TC	SHC	TC	SHC	TC	SHC	TC	SHC	TC	SHC	TC	SHC	TC	SHC
10	3.0	2.2	3.3	2.8	3.7	2.9	4.1	3.2	4.5	3.3	4.9	3.3	5.6	3.5	6.0	3.7
15	3.0	2.2	3.3	2.8	3.7	2.9	4.1	3.2	4.5	3.3	4.9	3.3	5.6	3.5	6.0	3.7
21	3.0	2.2	3.3	2.8	3.7	2.9	4.1	3.2	4.5	3.3	4.9	3.3	5.6	3.5	5.9	3.7
23	3.0	2.2	3.3	2.8	3.7	2.9	4.1	3.2	4.5	3.3	4.9	3.3	5.6	3.5	5.8	3.6
25	3.0	2.2	3.3	2.8	3.7	2.9	4.1	3.2	4.5	3.3	4.9	3.3	5.6	3.5	5.7	3.6
27	3.0	2.2	3.3	2.8	3.7	2.9	4.1	3.2	4.5	3.3	4.9	3.3	5.5	3.4	5.6	3.6
30	3.0	2.2	3.3	2.8	3.7	2.9	4.1	3.2	4.5	3.3	4.9	3.3	5.4	3.4	5.5	3.5
33	3.0	2.2	3.3	2.8	3.7	2.9	4.1	3.2	4.5	3.3	4.9	3.3	5.3	3.3	5.4	3.5
35	3.0	2.2	3.3	2.8	3.7	2.9	4.1	3.2	4.5	3.3	4.9	3.3	5.2	3.3	5.3	3.4
37	3.0	2.2	3.3	2.8	3.7	2.9	4.1	3.2	4.5	3.3	4.9	3.3	5.1	3.3	5.2	3.4
40	3.0	2.2	3.3	2.8	3.7	2.9	4.1	3.2	4.5	3.3	4.8	3.3	5.0	3.2	5.0	3.4
43	3.0	2.2	3.3	2.8	3.7	2.9	4.1	3.2	4.5	3.3	4.6	3.3	4.8	3.2	4.9	3.3
46	3.0	2.2	3.3	2.8	3.7	2.9	4.1	3.2	4.4	3.2	4.5	3.2	4.7	3.1	4.8	3.3

TC : Total Capacity kW.
SHC : Sensible Heat Capacity kW.

COOLING CAPACITY

■ MODEL : AS∗A18GACH

Outdoor temperature	Indoor temperature															
	20°CDB / 15 °CWB		23°CDB / 16 °CWB		24°CDB / 17 °CWB		26°CDB / 18 °CWB		27°CDB / 19 °CWB		28°CDB / 20 °CWB		30°CDB / 22 °CWB		32°CDB / 23 °CWB	
(°CDB)	TC	SHC	TC	SHC	TC	SHC	TC	SHC	TC	SHC	TC	SHC	TC	SHC	TC	SHC
10	3.7	2.9	4.2	3.5	4.6	3.7	5.1	4.1	5.6	4.2	6.1	4.3	7.0	4.4	7.5	4.8
15	3.7	2.9	4.2	3.5	4.6	3.7	5.1	4.1	5.6	4.2	6.1	4.3	7.0	4.4	7.5	4.8
21	3.7	2.9	4.2	3.5	4.6	3.7	5.1	4.1	5.6	4.2	6.1	4.3	7.0	4.4	7.3	4.7
23	3.7	2.9	4.2	3.5	4.6	3.7	5.1	4.1	5.6	4.2	6.1	4.3	7.0	4.4	7.2	4.6
25	3.7	2.9	4.2	3.5	4.6	3.7	5.1	4.1	5.6	4.2	6.1	4.3	7.0	4.4	7.1	4.6
27	3.7	2.9	4.2	3.5	4.6	3.7	5.1	4.1	5.6	4.2	6.1	4.3	6.8	4.4	7.0	4.6
30	3.7	2.9	4.2	3.5	4.6	3.7	5.1	4.1	5.6	4.2	6.1	4.3	6.7	4.3	6.8	4.5
33	3.7	2.9	4.2	3.5	4.6	3.7	5.1	4.1	5.6	4.2	6.1	4.3	6.5	4.3	6.7	4.4
35	3.7	2.9	4.2	3.5	4.6	3.7	5.1	4.1	5.6	4.2	6.1	4.3	6.4	4.2	6.5	4.4
37	3.7	2.9	4.2	3.5	4.6	3.7	5.1	4.1	5.6	4.2	6.1	4.3	6.3	4.2	6.4	4.4
40	3.7	2.9	4.2	3.5	4.6	3.7	5.1	4.1	5.6	4.2	5.9	4.2	6.2	4.1	6.3	4.3
43	3.7	2.9	4.2	3.5	4.6	3.7	5.1	4.1	5.6	4.2	5.8	4.2	6.0	4.1	6.1	4.3
46	3.7	2.9	4.2	3.5	4.6	3.7	5.1	4.1	5.5	4.1	5.6	4.1	5.8	4.0	5.9	4.2

■ MODEL : AS∗A24GACH

Outdoor temperature	Indoor temperature															
	20°CDB / 15 °CWB		23°CDB / 16 °CWB		24°CDB / 17 °CWB		26°CDB / 18 °CWB		27°CDB / 19 °CWB		28°CDB / 20 °CWB		30°CDB / 22 °CWB		32°CDB / 23 °CWB	
(°CDB)	TC	SHC	TC	SHC	TC	SHC	TC	SHC	TC	SHC	TC	SHC	TC	SHC	TC	SHC
10	4.7	3.7	5.3	4.6	5.9	4.7	6.5	5.2	7.1	5.4	7.7	5.5	8.9	5.7	9.5	6.1
15	4.7	3.7	5.3	4.6	5.9	4.7	6.5	5.2	7.1	5.4	7.7	5.5	8.9	5.7	9.5	6.1
21	4.7	3.7	5.3	4.6	5.9	4.7	6.5	5.2	7.1	5.4	7.7	5.5	8.9	5.7	9.3	6.0
23	4.7	3.7	5.3	4.6	5.9	4.7	6.5	5.2	7.1	5.4	7.7	5.5	8.9	5.7	9.1	6.0
25	4.7	3.7	5.3	4.6	5.9	4.7	6.5	5.2	7.1	5.4	7.7	5.5	8.8	5.7	9.0	5.9
27	4.7	3.7	5.3	4.6	5.9	4.7	6.5	5.2	7.1	5.4	7.7	5.5	8.7	5.6	8.8	5.9
30	4.7	3.7	5.3	4.6	5.9	4.7	6.5	5.2	7.1	5.4	7.7	5.5	8.5	5.5	8.6	5.8
33	4.7	3.7	5.3	4.6	5.9	4.7	6.5	5.2	7.1	5.4	7.7	5.5	8.3	5.5	8.4	5.7
35	4.7	3.7	5.3	4.6	5.9	4.7	6.5	5.2	7.1	5.4	7.7	5.5	8.1	5.4	8.3	5.7
37	4.7	3.7	5.3	4.6	5.9	4.7	6.5	5.2	7.1	5.4	7.7	5.5	8.0	5.4	8.2	5.6
40	4.7	3.7	5.3	4.6	5.9	4.7	6.5	5.2	7.1	5.4	7.5	5.4	7.8	5.3	8.0	5.6
43	4.7	3.7	5.3	4.6	5.9	4.7	6.5	5.2	7.1	5.4	7.3	5.3	7.6	5.2	7.8	5.5
46	4.7	3.7	5.3	4.6	5.9	4.7	6.5	5.2	7.0	5.3	7.1	5.3	7.4	5.2	7.5	5.4

■ MODEL : AS∗A30GACH

Outdoor temperature	Indoor temperature															
	20°CDB / 15 °CWB		23°CDB / 16 °CWB		24°CDB / 17 °CWB		26°CDB / 18 °CWB		27°CDB / 19 °CWB		28°CDB / 20 °CWB		30°CDB / 22 °CWB		32°CDB / 23 °CWB	
(°CDB)	TC	SHC	TC	SHC	TC	SHC	TC	SHC	TC	SHC	TC	SHC	TC	SHC	TC	SHC
10	5.3	4.1	5.9	5.1	6.6	5.3	7.3	5.9	8.0	6.0	8.7	6.2	10.0	6.4	10.7	6.9
15	5.3	4.1	5.9	5.1	6.6	5.3	7.3	5.9	8.0	6.0	8.7	6.2	10.0	6.4	10.7	6.9
21	5.3	4.1	5.9	5.1	6.6	5.3	7.3	5.9	8.0	6.0	8.7	6.2	10.0	6.4	10.4	6.8
23	5.3	4.1	5.9	5.1	6.6	5.3	7.3	5.9	8.0	6.0	8.7	6.2	10.0	6.4	10.3	6.7
25	5.3	4.1	5.9	5.1	6.6	5.3	7.3	5.9	8.0	6.0	8.7	6.2	9.9	6.4	10.1	6.7
27	5.3	4.1	5.9	5.1	6.6	5.3	7.3	5.9	8.0	6.0	8.7	6.2	9.8	6.3	10.0	6.6
30	5.3	4.1	5.9	5.1	6.6	5.3	7.3	5.9	8.0	6.0	8.7	6.2	9.6	6.2	9.7	6.5
33	5.3	4.1	5.9	5.1	6.6	5.3	7.3	5.9	8.0	6.0	8.7	6.2	9.3	6.2	9.5	6.4
35	5.3	4.1	5.9	5.1	6.6	5.3	7.3	5.9	8.0	6.0	8.7	6.2	9.2	6.1	9.3	6.4
37	5.3	4.1	5.9	5.1	6.6	5.3	7.3	5.9	8.0	6.0	8.7	6.2	9.0	6.0	9.2	6.3
40	5.3	4.1	5.9	5.1	6.6	5.3	7.3	5.9	8.0	6.0	8.5	6.1	8.8	6.0	9.0	6.3
43	5.3	4.1	5.9	5.1	6.6	5.3	7.3	5.9	8.0	6.0	8.2	6.0	8.6	5.9	8.7	6.2
46	5.3	4.1	5.9	5.1	6.6	5.3	7.3	5.9	7.9	6.0	8.0	5.9	8.3	5.8	8.5	6.1

TC : Total Capacity kW.
SHC : Sensible Heat Capacity kW.

8. CAPACITY TABLE HEATING (INDOOR UNIT)

8-1. COMPACT CASSETTE TYPE

HEATING CAPACITY

■ MODEL : AUXB04GALH

Outdoor Temperature		Indoor temperature						
		16°CDB	18°CDB	20°CDB	21°CDB	22°CDB	24°CDB	26°CDB
(°CDB)	(°CWB)	TC	TC	TC	TC	TC	TC	TC
-19.3	-20.0	0.7	0.7	0.7	0.7	0.7	0.7	0.7
-15.0	-16.0	0.8	0.8	0.8	0.8	0.8	0.8	0.8
-12.0	-13.0	0.9	0.9	0.9	0.8	0.8	0.8	0.8
-9.0	-10.0	1.0	1.0	0.9	0.9	0.9	0.9	0.9
-7.0	-8.0	1.0	1.0	1.0	1.0	1.0	1.0	1.0
-5.0	-6.0	1.1	1.1	1.1	1.1	1.1	1.1	1.0
-3.0	-4.0	1.1	1.1	1.1	1.1	1.1	1.1	1.0
-1.0	-2.0	1.2	1.2	1.2	1.2	1.2	1.1	1.0
0.0	-1.0	1.2	1.2	1.2	1.2	1.2	1.1	1.0
2.0	1.0	1.3	1.3	1.3	1.3	1.2	1.1	1.0
5.0	4.0	1.4	1.4	1.3	1.3	1.2	1.1	1.0
7.0	6.0	1.4	1.4	1.3	1.3	1.2	1.1	1.0
9.0	7.8	1.5	1.4	1.3	1.3	1.2	1.1	1.0
12.0	10.6	1.5	1.4	1.3	1.3	1.2	1.1	1.0
15.0	13.5	1.5	1.4	1.3	1.3	1.2	1.1	1.0

■ MODEL : AUXB07GALH

Outdoor Temperature		Indoor temperature						
		16°CDB	18°CDB	20°CDB	21°CDB	22°CDB	24°CDB	26°CDB
(°CDB)	(°CWB)	TC	TC	TC	TC	TC	TC	TC
-19.3	-20.0	1.5	1.4	1.4	1.4	1.4	1.4	1.4
-15.0	-16.0	1.7	1.7	1.7	1.7	1.7	1.7	1.7
-12.0	-13.0	1.9	1.9	1.9	1.8	1.8	1.8	1.8
-9.0	-10.0	2.1	2.1	2.0	2.0	2.0	2.0	2.0
-7.0	-8.0	2.2	2.2	2.2	2.2	2.2	2.1	2.1
-5.0	-6.0	2.3	2.3	2.3	2.3	2.3	2.3	2.2
-3.0	-4.0	2.4	2.4	2.4	2.4	2.4	2.4	2.2
-1.0	-2.0	2.6	2.6	2.5	2.5	2.5	2.4	2.2
0.0	-1.0	2.6	2.6	2.6	2.6	2.6	2.4	2.2
2.0	1.0	2.8	2.8	2.7	2.7	2.6	2.4	2.2
5.0	4.0	3.0	3.0	2.8	2.7	2.6	2.4	2.2
7.0	6.0	3.1	3.0	2.8	2.7	2.6	2.4	2.2
9.0	7.8	3.2	3.0	2.8	2.7	2.6	2.4	2.2
12.0	10.6	3.2	3.0	2.8	2.7	2.6	2.4	2.2
15.0	13.5	3.2	3.0	2.8	2.7	2.6	2.4	2.2

■ MODEL : AUXB09GALH

Outdoor Temperature		Indoor temperature						
		16°CDB	18°CDB	20°CDB	21°CDB	22°CDB	24°CDB	26°CDB
(°CDB)	(°CWB)	TC	TC	TC	TC	TC	TC	TC
-19.3	-20.0	1.7	1.7	1.7	1.7	1.6	1.6	1.6
-15.0	-16.0	1.9	1.9	1.9	1.9	1.9	1.9	1.9
-12.0	-13.0	2.1	2.1	2.1	2.1	2.1	2.1	2.1
-9.0	-10.0	2.4	2.3	2.3	2.3	2.3	2.3	2.3
-7.0	-8.0	2.5	2.5	2.5	2.5	2.5	2.4	2.4
-5.0	-6.0	2.6	2.6	2.6	2.6	2.6	2.6	2.5
-3.0	-4.0	2.8	2.8	2.8	2.8	2.7	2.7	2.5
-1.0	-2.0	2.9	2.9	2.9	2.9	2.9	2.7	2.5
0.0	-1.0	3.0	3.0	3.0	3.0	3.0	2.7	2.5
2.0	1.0	3.2	3.1	3.1	3.1	3.0	2.8	2.5
5.0	4.0	3.4	3.4	3.2	3.1	3.0	2.8	2.6
7.0	6.0	3.5	3.4	3.2	3.1	3.0	2.8	2.6
9.0	7.8	3.6	3.4	3.2	3.1	3.0	2.8	2.6
12.0	10.6	3.6	3.4	3.2	3.1	3.0	2.8	2.6
15.0	13.5	3.6	3.4	3.2	3.1	3.0	2.8	2.6

■ MODEL : AUXB12GALH

Outdoor Temperature		Indoor temperature						
		16°CDB	18°CDB	20°CDB	21°CDB	22°CDB	24°CDB	26°CDB
(°CDB)	(°CWB)	TC	TC	TC	TC	TC	TC	TC
-19.3	-20.0	2.1	2.1	2.1	2.1	2.1	2.1	2.1
-15.0	-16.0	2.5	2.5	2.5	2.4	2.4	2.4	2.4
-12.0	-13.0	2.7	2.7	2.7	2.7	2.7	2.7	2.7
-9.0	-10.0	3.0	3.0	3.0	3.0	3.0	3.0	2.9
-7.0	-8.0	3.2	3.2	3.2	3.2	3.1	3.1	3.1
-5.0	-6.0	3.4	3.4	3.4	3.3	3.3	3.3	3.2
-3.0	-4.0	3.6	3.6	3.5	3.5	3.5	3.5	3.2
-1.0	-2.0	3.8	3.7	3.7	3.7	3.7	3.5	3.2
0.0	-1.0	3.9	3.8	3.8	3.8	3.8	3.5	3.2
2.0	1.0	4.1	4.0	4.0	3.9	3.8	3.5	3.3
5.0	4.0	4.4	4.3	4.1	4.0	3.8	3.6	3.3
7.0	6.0	4.5	4.4	4.1	4.0	3.8	3.6	3.3
9.0	7.8	4.6	4.4	4.1	4.0	3.8	3.6	3.3
12.0	10.6	4.6	4.4	4.1	4.0	3.8	3.6	3.3
15.0	13.5	4.6	4.4	4.1	4.0	3.8	3.6	3.3

TC : Total Capacity kW.

MODEL SELECTION

HEATING CAPACITY

■ MODEL : AUXB14GALH

Outdoor Temperature		Indoor temperature						
		16°CDB	18°CDB	20°CDB	21°CDB	22°CDB	24°CDB	26°CDB
(°CDB)	(°CWB)	TC	TC	TC	TC	TC	TC	TC
-19.3	**-20.0**	2.6	2.6	2.6	2.6	2.6	2.6	2.6
-15.0	**-16.0**	3.0	3.0	3.0	3.0	3.0	3.0	3.0
-12.0	**-13.0**	3.3	3.3	3.3	3.3	3.3	3.3	3.3
-9.0	**-10.0**	3.7	3.7	3.6	3.6	3.6	3.6	3.6
-7.0	**-8.0**	3.9	3.9	3.9	3.9	3.8	3.8	3.8
-5.0	**-6.0**	4.1	4.1	4.1	4.1	4.1	4.0	3.9
-3.0	**-4.0**	4.4	4.3	4.3	4.3	4.3	4.3	4.0
-1.0	**-2.0**	4.6	4.6	4.5	4.5	4.5	4.3	4.0
0.0	**-1.0**	4.7	4.7	4.7	4.6	4.6	4.3	4.0
2.0	**1.0**	5.0	4.9	4.9	4.8	4.6	4.3	4.0
5.0	**4.0**	5.3	5.3	5.0	4.8	4.7	4.3	4.0
7.0	**6.0**	5.5	5.3	5.0	4.8	4.7	4.3	4.0
9.0	**7.8**	5.7	5.3	5.0	4.8	4.7	4.3	4.0
12.0	**10.6**	5.7	5.3	5.0	4.8	4.7	4.3	4.0
15.0	**13.5**	5.7	5.3	5.0	4.8	4.7	4.3	4.0

■ MODEL : AUXB18GALH

Outdoor Temperature		Indoor temperature						
		16°CDB	18°CDB	20°CDB	21°CDB	22°CDB	24°CDB	26°CDB
(°CDB)	(°CWB)	TC	TC	TC	TC	TC	TC	TC
-19.3	**-20.0**	3.3	3.3	3.3	3.3	3.2	3.2	3.2
-15.0	**-16.0**	3.8	3.8	3.8	3.8	3.8	3.7	3.7
-12.0	**-13.0**	4.2	4.2	4.2	4.2	4.2	4.1	4.1
-9.0	**-10.0**	4.6	4.6	4.6	4.6	4.6	4.5	4.5
-7.0	**-8.0**	4.9	4.9	4.9	4.9	4.8	4.8	4.8
-5.0	**-6.0**	5.2	5.2	5.2	5.1	5.1	5.1	5.0
-3.0	**-4.0**	5.5	5.5	5.4	5.4	5.4	5.4	5.0
-1.0	**-2.0**	5.8	5.8	5.7	5.7	5.7	5.4	5.0
0.0	**-1.0**	5.9	5.9	5.9	5.8	5.8	5.4	5.0
2.0	**1.0**	6.2	6.2	6.2	6.0	5.8	5.4	5.0
5.0	**4.0**	6.7	6.7	6.3	6.1	5.9	5.5	5.0
7.0	**6.0**	7.0	6.7	6.3	6.1	5.9	5.5	5.0
9.0	**7.8**	7.1	6.7	6.3	6.1	5.9	5.5	5.0
12.0	**10.6**	7.1	6.7	6.3	6.1	5.9	5.5	5.0
15.0	**13.5**	7.1	6.7	6.3	6.1	5.9	5.5	5.0

■ MODEL : AUXB24GALH

Outdoor Temperature		Indoor temperature						
		16°CDB	18°CDB	20°CDB	21°CDB	22°CDB	24°CDB	26°CDB
(°CDB)	(°CWB)	TC	TC	TC	TC	TC	TC	TC
-19.3	**-20.0**	4.2	4.1	4.1	4.1	4.1	4.1	4.1
-15.0	**-16.0**	4.8	4.8	4.8	4.8	4.8	4.7	4.7
-12.0	**-13.0**	5.4	5.3	5.3	5.3	5.3	5.3	5.2
-9.0	**-10.0**	5.9	5.9	5.8	5.8	5.8	5.8	5.7
-7.0	**-8.0**	6.2	6.2	6.2	6.2	6.1	6.1	6.1
-5.0	**-6.0**	6.6	6.6	6.6	6.5	6.5	6.5	6.3
-3.0	**-4.0**	7.0	6.9	6.9	6.9	6.9	6.8	6.3
-1.0	**-2.0**	7.4	7.3	7.3	7.2	7.2	6.9	6.3
0.0	**-1.0**	7.5	7.5	7.4	7.4	7.4	6.9	6.3
2.0	**1.0**	7.9	7.9	7.8	7.7	7.4	6.9	6.3
5.0	**4.0**	8.5	8.5	8.0	7.7	7.5	6.9	6.4
7.0	**6.0**	8.9	8.5	8.0	7.7	7.5	6.9	6.4
9.0	**7.8**	9.1	8.5	8.0	7.7	7.5	6.9	6.4
12.0	**10.6**	9.1	8.5	8.0	7.7	7.5	6.9	6.4
15.0	**13.5**	9.1	8.5	8.0	7.7	7.5	6.9	6.4

TC : Total Capacity kW.

MODEL SELECTION

8-2. CASSETTE TYPE

HEATING CAPACITY

■ MODEL : AUXD18GALH

Outdoor Temperature		Indoor temperature						
		16°CDB	18°CDB	20°CDB	21°CDB	22°CDB	24°CDB	26°CDB
(°CDB)	(°CWB)	TC	TC	TC	TC	TC	TC	TC
-19.3	**-20.0**	3.3	3.3	3.3	3.3	3.2	3.2	3.2
-15.0	**-16.0**	3.8	3.8	3.8	3.8	3.8	3.7	3.7
-12.0	**-13.0**	4.2	4.2	4.2	4.2	4.2	4.1	4.1
-9.0	**-10.0**	4.6	4.6	4.6	4.6	4.6	4.5	4.5
-7.0	**-8.0**	4.9	4.9	4.9	4.9	4.8	4.8	4.8
-5.0	**-6.0**	5.2	5.2	5.2	5.1	5.1	5.1	5.0
-3.0	**-4.0**	5.5	5.5	5.4	5.4	5.4	5.4	5.0
-1.0	**-2.0**	5.8	5.8	5.7	5.7	5.7	5.4	5.0
0.0	**-1.0**	5.9	5.9	5.9	5.8	5.8	5.4	5.0
2.0	**1.0**	6.2	6.2	6.2	6.0	5.8	5.4	5.0
5.0	**4.0**	6.7	6.7	6.3	6.1	5.9	5.5	5.0
7.0	**6.0**	7.0	6.7	6.3	6.1	5.9	5.5	5.0
9.0	**7.8**	7.1	6.7	6.3	6.1	5.9	5.5	5.0
12.0	**10.6**	7.1	6.7	6.3	6.1	5.9	5.5	5.0
15.0	**13.5**	7.1	6.7	6.3	6.1	5.9	5.5	5.0

■ MODEL : AUXD24GALH

Outdoor Temperature		Indoor temperature						
		16°CDB	18°CDB	20°CDB	21°CDB	22°CDB	24°CDB	26°CDB
(°CDB)	(°CWB)	TC	TC	TC	TC	TC	TC	TC
-19.3	**-20.0**	4.2	4.1	4.1	4.1	4.1	4.1	4.1
-15.0	**-16.0**	4.8	4.8	4.8	4.8	4.8	4.7	4.7
-12.0	**-13.0**	5.4	5.3	5.3	5.3	5.3	5.3	5.2
-9.0	**-10.0**	5.9	5.9	5.8	5.8	5.8	5.8	5.7
-7.0	**-8.0**	6.2	6.2	6.2	6.2	6.1	6.1	6.1
-5.0	**-6.0**	6.6	6.6	6.6	6.5	6.5	6.5	6.3
-3.0	**-4.0**	7.0	6.9	6.9	6.9	6.9	6.8	6.3
-1.0	**-2.0**	7.4	7.3	7.3	7.2	7.2	6.9	6.3
0.0	**-1.0**	7.5	7.5	7.4	7.4	7.4	6.9	6.3
2.0	**1.0**	7.9	7.9	7.8	7.7	7.4	6.9	6.3
5.0	**4.0**	8.5	8.5	8.0	7.7	7.5	6.9	6.4
7.0	**6.0**	8.9	8.5	8.0	7.7	7.5	6.9	6.4
9.0	**7.8**	9.1	8.5	8.0	7.7	7.5	6.9	6.4
12.0	**10.6**	9.1	8.5	8.0	7.7	7.5	6.9	6.4
15.0	**13.5**	9.1	8.5	8.0	7.7	7.5	6.9	6.4

TC : Total Capacity kW.

HEATING CAPACITY

■ MODEL : AUXA30GALH

Outdoor Temperature		Indoor temperature						
		16°CDB	18°CDB	20°CDB	21°CDB	22°CDB	24°CDB	26°CDB
(°CDB)	(°CWB)	TC	TC	TC	TC	TC	TC	TC
-19.3	**-20.0**	5.2	5.2	5.2	5.2	5.1	5.1	5.1
-15.0	**-16.0**	6.0	6.0	6.0	6.0	6.0	5.9	5.9
-12.0	**-13.0**	6.7	6.7	6.6	6.6	6.6	6.6	6.5
-9.0	**-10.0**	7.4	7.3	7.3	7.3	7.2	7.2	7.2
-7.0	**-8.0**	7.8	7.8	7.7	7.7	7.7	7.7	7.6
-5.0	**-6.0**	8.3	8.2	8.2	8.2	8.1	8.1	7.9
-3.0	**-4.0**	8.7	8.7	8.6	8.6	8.6	8.5	7.9
-1.0	**-2.0**	9.2	9.1	9.1	9.0	9.0	8.6	7.9
0.0	**-1.0**	9.4	9.4	9.3	9.3	9.2	8.6	7.9
2.0	**1.0**	9.9	9.8	9.8	9.6	9.3	8.6	7.9
5.0	**4.0**	10.6	10.6	10.0	9.7	9.3	8.7	8.0
7.0	**6.0**	11.1	10.6	10.0	9.7	9.3	8.7	8.0
9.0	**7.8**	11.3	10.6	10.0	9.7	9.3	8.7	8.0
12.0	**10.6**	11.3	10.7	10.0	9.7	9.3	8.7	8.0
15.0	**13.5**	11.3	10.7	10.0	9.7	9.3	8.7	8.0

■ MODEL : AUXA36GALH

Outdoor Temperature		Indoor temperature						
		16°CDB	18°CDB	20°CDB	21°CDB	22°CDB	24°CDB	26°CDB
(°CDB)	(°CWB)	TC	TC	TC	TC	TC	TC	TC
-19.3	**-20.0**	6.5	6.5	6.5	6.5	6.4	6.4	6.4
-15.0	**-16.0**	7.5	7.5	7.5	7.5	7.5	7.4	7.4
-12.0	**-13.0**	8.4	8.3	8.3	8.3	8.3	8.2	8.2
-9.0	**-10.0**	9.2	9.2	9.1	9.1	9.0	9.0	9.0
-7.0	**-8.0**	9.8	9.7	9.6	9.6	9.6	9.6	9.5
-5.0	**-6.0**	10.3	10.3	10.2	10.2	10.2	10.1	9.8
-3.0	**-4.0**	10.9	10.8	10.8	10.8	10.7	10.7	9.9
-1.0	**-2.0**	11.5	11.4	11.3	11.3	11.3	10.7	9.9
0.0	**-1.0**	11.8	11.7	11.6	11.6	11.5	10.7	9.9
2.0	**1.0**	12.4	12.3	12.2	12.0	11.6	10.8	9.9
5.0	**4.0**	13.3	13.2	12.5	12.1	11.7	10.8	10.0
7.0	**6.0**	13.8	13.3	12.5	12.1	11.7	10.8	10.0
9.0	**7.8**	14.2	13.3	12.5	12.1	11.7	10.8	10.0
12.0	**10.6**	14.2	13.3	12.5	12.1	11.7	10.8	10.0
15.0	**13.5**	14.2	13.3	12.5	12.1	11.7	10.8	10.0

■ MODEL : AUXA45GALH

Outdoor Temperature		Indoor temperature						
		16°CDB	18°CDB	20°CDB	21°CDB	22°CDB	24°CDB	26°CDB
(°CDB)	(°CWB)	TC	TC	TC	TC	TC	TC	TC
-19.3	**-20.0**	7.3	7.2	7.2	7.2	7.2	7.2	7.2
-15.0	**-16.0**	8.4	8.4	8.4	8.4	8.4	8.3	8.3
-12.0	**-13.0**	9.4	9.3	9.3	9.2	9.2	9.2	9.2
-9.0	**-10.0**	10.3	10.3	10.2	10.2	10.1	10.1	10.0
-7.0	**-8.0**	10.9	10.9	10.8	10.8	10.8	10.7	10.7
-5.0	**-6.0**	11.6	11.5	11.5	11.4	11.4	11.3	11.0
-3.0	**-4.0**	12.2	12.1	12.1	12.0	12.0	12.0	11.1
-1.0	**-2.0**	12.9	12.8	12.7	12.7	12.6	12.0	11.1
0.0	**-1.0**	13.2	13.1	13.0	13.0	12.9	12.0	11.1
2.0	**1.0**	13.9	13.8	13.7	13.4	13.0	12.0	11.1
5.0	**4.0**	14.9	14.8	14.0	13.5	13.1	12.1	11.2
7.0	**6.0**	15.5	14.9	14.0	13.5	13.1	12.1	11.2
9.0	**7.8**	15.9	14.9	14.0	13.5	13.1	12.1	11.2
12.0	**10.6**	15.9	14.9	14.0	13.5	13.1	12.1	11.2
15.0	**13.5**	15.9	14.9	14.0	13.5	13.1	12.1	11.2

■ MODEL : AUXA54GALH

Outdoor Temperature		Indoor temperature						
		16°CDB	18°CDB	20°CDB	21°CDB	22°CDB	24°CDB	26°CDB
(°CDB)	(°CWB)	TC	TC	TC	TC	TC	TC	TC
-19.3	**-20.0**	8.3	8.3	8.3	8.3	8.2	8.2	8.2
-15.0	**-16.0**	9.7	9.6	9.6	9.5	9.5	9.5	9.5
-12.0	**-13.0**	10.7	10.7	10.6	10.6	10.6	10.5	10.5
-9.0	**-10.0**	11.8	11.7	11.6	11.6	11.6	11.5	11.5
-7.0	**-8.0**	12.5	12.4	12.3	12.3	12.3	12.2	12.2
-5.0	**-6.0**	13.2	13.2	13.1	13.1	13.0	13.0	12.6
-3.0	**-4.0**	14.0	13.9	13.8	13.8	13.7	13.7	12.6
-1.0	**-2.0**	14.7	14.6	14.5	14.5	14.4	13.7	12.6
0.0	**-1.0**	15.1	15.0	14.9	14.8	14.8	13.7	12.6
2.0	**1.0**	15.8	15.7	15.6	15.3	14.8	13.8	12.7
5.0	**4.0**	17.0	16.9	16.0	15.4	14.9	13.9	12.8
7.0	**6.0**	17.7	17.0	16.0	15.4	14.9	13.9	12.8
9.0	**7.8**	18.1	17.0	16.0	15.4	14.9	13.9	12.8
12.0	**10.6**	18.1	17.1	16.0	15.4	14.9	13.9	12.8
15.0	**13.5**	18.1	17.1	16.0	15.4	14.9	13.9	12.8

TC : Total Capacity kW.

8-3. LOW STATIC PRESSURE DUCT/CONCEALED FLOOR TYPE

HEATING CAPACITY

■ MODEL : ARXB07GALH

Outdoor Temperature		Indoor temperature						
		16°CDB	18°CDB	20°CDB	21°CDB	22°CDB	24°CDB	26°CDB
(°CDB)	(°CWB)	TC	TC	TC	TC	TC	TC	TC
-19.3	**-20.0**	1.5	1.4	1.4	1.4	1.4	1.4	1.4
-15.0	**-16.0**	1.7	1.7	1.7	1.7	1.7	1.7	1.7
-12.0	**-13.0**	1.9	1.9	1.9	1.8	1.8	1.8	1.8
-9.0	**-10.0**	2.1	2.1	2.0	2.0	2.0	2.0	2.0
-7.0	**-8.0**	2.2	2.2	2.2	2.2	2.2	2.1	2.1
-5.0	**-6.0**	2.3	2.3	2.3	2.3	2.3	2.3	2.2
-3.0	**-4.0**	2.4	2.4	2.4	2.4	2.4	2.4	2.2
-1.0	**-2.0**	2.6	2.6	2.5	2.5	2.5	2.4	2.2
0.0	**-1.0**	2.6	2.6	2.6	2.6	2.6	2.4	2.2
2.0	**1.0**	2.8	2.8	2.7	2.7	2.6	2.4	2.2
5.0	**4.0**	3.0	3.0	2.8	2.7	2.6	2.4	2.2
7.0	**6.0**	3.1	3.0	2.8	2.7	2.6	2.4	2.2
9.0	**7.8**	3.2	3.0	2.8	2.7	2.6	2.4	2.2
12.0	**10.6**	3.2	3.0	2.8	2.7	2.6	2.4	2.2
15.0	**13.5**	3.2	3.0	2.8	2.7	2.6	2.4	2.2

■ MODEL : ARXB09GALH

Outdoor Temperature		Indoor temperature						
		16°CDB	18°CDB	20°CDB	21°CDB	22°CDB	24°CDB	26°CDB
(°CDB)	(°CWB)	TC	TC	TC	TC	TC	TC	TC
-19.3	**-20.0**	1.7	1.7	1.7	1.7	1.6	1.6	1.6
-15.0	**-16.0**	1.9	1.9	1.9	1.9	1.9	1.9	1.9
-12.0	**-13.0**	2.1	2.1	2.1	2.1	2.1	2.1	2.1
-9.0	**-10.0**	2.4	2.3	2.3	2.3	2.3	2.3	2.3
-7.0	**-8.0**	2.5	2.5	2.5	2.5	2.5	2.4	2.4
-5.0	**-6.0**	2.6	2.6	2.6	2.6	2.6	2.6	2.5
-3.0	**-4.0**	2.8	2.8	2.8	2.8	2.7	2.7	2.5
-1.0	**-2.0**	2.9	2.9	2.9	2.9	2.9	2.7	2.5
0.0	**-1.0**	3.0	3.0	3.0	3.0	3.0	2.7	2.5
2.0	**1.0**	3.2	3.1	3.1	3.1	3.0	2.8	2.5
5.0	**4.0**	3.4	3.4	3.2	3.1	3.0	2.8	2.6
7.0	**6.0**	3.5	3.4	3.2	3.1	3.0	2.8	2.6
9.0	**7.8**	3.6	3.4	3.2	3.1	3.0	2.8	2.6
12.0	**10.6**	3.6	3.4	3.2	3.1	3.0	2.8	2.6
15.0	**13.5**	3.6	3.4	3.2	3.1	3.0	2.8	2.6

TC : Total Capacity kW.

MODEL SELECTION

HEATING CAPACITY

■ MODEL : ARXB12GALH

Outdoor Temperature		Indoor temperature						
		16°CDB	18°CDB	20°CDB	21°CDB	22°CDB	24°CDB	26°CDB
(°CDB)	(°CWB)	TC	TC	TC	TC	TC	TC	TC
-19.3	**-20.0**	2.1	2.1	2.1	2.1	2.1	2.1	2.0
-15.0	**-16.0**	2.4	2.4	2.4	2.4	2.4	2.4	2.4
-12.0	**-13.0**	2.7	2.7	2.7	2.6	2.6	2.6	2.6
-9.0	**-10.0**	2.9	2.9	2.9	2.9	2.9	2.9	2.9
-7.0	**-8.0**	3.1	3.1	3.1	3.1	3.1	3.1	3.0
-5.0	**-6.0**	3.3	3.3	3.3	3.3	3.3	3.2	3.1
-3.0	**-4.0**	3.5	3.5	3.5	3.4	3.4	3.4	3.2
-1.0	**-2.0**	3.7	3.7	3.6	3.6	3.6	3.4	3.2
0.0	**-1.0**	3.8	3.7	3.7	3.7	3.7	3.4	3.2
2.0	**1.0**	4.0	3.9	3.9	3.8	3.7	3.4	3.2
5.0	**4.0**	4.3	4.2	4.0	3.9	3.7	3.5	3.2
7.0	**6.0**	4.4	4.3	4.0	3.9	3.7	3.5	3.2
9.0	**7.8**	4.5	4.3	4.0	3.9	3.7	3.5	3.2
12.0	**10.6**	4.5	4.3	4.0	3.9	3.7	3.5	3.2
15.0	**13.5**	4.5	4.3	4.0	3.9	3.7	3.5	3.2

■ MODEL : ARXB14GALH

Outdoor Temperature		Indoor temperature						
		16°CDB	18°CDB	20°CDB	21°CDB	22°CDB	24°CDB	26°CDB
(°CDB)	(°CWB)	TC	TC	TC	TC	TC	TC	TC
-19.3	**-20.0**	2.6	2.6	2.6	2.6	2.6	2.6	2.6
-15.0	**-16.0**	3.0	3.0	3.0	3.0	3.0	3.0	3.0
-12.0	**-13.0**	3.3	3.3	3.3	3.3	3.3	3.3	3.3
-9.0	**-10.0**	3.7	3.7	3.6	3.6	3.6	3.6	3.6
-7.0	**-8.0**	3.9	3.9	3.9	3.9	3.8	3.8	3.8
-5.0	**-6.0**	4.1	4.1	4.1	4.1	4.1	4.0	3.9
-3.0	**-4.0**	4.4	4.3	4.3	4.3	4.3	4.3	4.0
-1.0	**-2.0**	4.6	4.6	4.5	4.5	4.5	4.3	4.0
0.0	**-1.0**	4.7	4.7	4.7	4.6	4.6	4.3	4.0
2.0	**1.0**	5.0	4.9	4.9	4.8	4.6	4.3	4.0
5.0	**4.0**	5.3	5.3	5.0	4.8	4.7	4.3	4.0
7.0	**6.0**	5.5	5.3	5.0	4.8	4.7	4.3	4.0
9.0	**7.8**	5.7	5.3	5.0	4.8	4.7	4.3	4.0
12.0	**10.6**	5.7	5.3	5.0	4.8	4.7	4.3	4.0
15.0	**13.5**	5.7	5.3	5.0	4.8	4.7	4.3	4.0

■ MODEL : ARXB18GALH

Outdoor Temperature		Indoor temperature						
		16°CDB	18°CDB	20°CDB	21°CDB	22°CDB	24°CDB	26°CDB
(°CDB)	(°CWB)	TC	TC	TC	TC	TC	TC	TC
-19.3	**-20.0**	3.3	3.3	3.3	3.3	3.2	3.2	3.2
-15.0	**-16.0**	3.8	3.8	3.8	3.8	3.8	3.7	3.7
-12.0	**-13.0**	4.2	4.2	4.2	4.2	4.2	4.1	4.1
-9.0	**-10.0**	4.6	4.6	4.6	4.6	4.6	4.5	4.5
-7.0	**-8.0**	4.9	4.9	4.9	4.9	4.8	4.8	4.8
-5.0	**-6.0**	5.2	5.2	5.2	5.1	5.1	5.1	5.0
-3.0	**-4.0**	5.5	5.5	5.4	5.4	5.4	5.4	5.0
-1.0	**-2.0**	5.8	5.8	5.7	5.7	5.7	5.4	5.0
0.0	**-1.0**	5.9	5.9	5.9	5.8	5.8	5.4	5.0
2.0	**1.0**	6.2	6.2	6.2	6.0	5.8	5.4	5.0
5.0	**4.0**	6.7	6.7	6.3	6.1	5.9	5.5	5.0
7.0	**6.0**	7.0	6.7	6.3	6.1	5.9	5.5	5.0
9.0	**7.8**	7.1	6.7	6.3	6.1	5.9	5.5	5.0
12.0	**10.6**	7.1	6.7	6.3	6.1	5.9	5.5	5.0
15.0	**13.5**	7.1	6.7	6.3	6.1	5.9	5.5	5.0

TC : Total Capacity kW.

8-4. SLIM DUCT/SLIM CONCEALED FLOOR TYPE

HEATING CAPACITY

■ MODEL : ARXD04GALH

Outdoor Temperature		Indoor temperature						
		16°CDB	18°CDB	20°CDB	21°CDB	22°CDB	24°CDB	26°CDB
(°CDB)	(°CWB)	TC	TC	TC	TC	TC	TC	TC
-19.3	-20.0	0.7	0.7	0.7	0.7	0.7	0.7	0.7
-15.0	-16.0	0.8	0.8	0.8	0.8	0.8	0.8	0.8
-12.0	-13.0	0.9	0.9	0.9	0.8	0.8	0.8	0.8
-9.0	-10.0	1.0	1.0	0.9	0.9	0.9	0.9	0.9
-7.0	-8.0	1.0	1.0	1.0	1.0	1.0	1.0	1.0
-5.0	-6.0	1.1	1.1	1.1	1.1	1.1	1.1	1.0
-3.0	-4.0	1.1	1.1	1.1	1.1	1.1	1.1	1.0
-1.0	-2.0	1.2	1.2	1.2	1.2	1.2	1.1	1.0
0.0	-1.0	1.2	1.2	1.2	1.2	1.2	1.1	1.0
2.0	1.0	1.3	1.3	1.3	1.3	1.2	1.1	1.0
5.0	4.0	1.4	1.4	1.3	1.3	1.2	1.1	1.0
7.0	6.0	1.4	1.4	1.3	1.3	1.2	1.1	1.0
9.0	7.8	1.5	1.4	1.3	1.3	1.2	1.1	1.0
12.0	10.6	1.5	1.4	1.3	1.3	1.2	1.1	1.0
15.0	13.5	1.5	1.4	1.3	1.3	1.2	1.1	1.0

■ MODEL : ARXD07GALH

Outdoor Temperature		Indoor temperature						
		16°CDB	18°CDB	20°CDB	21°CDB	22°CDB	24°CDB	26°CDB
(°CDB)	(°CWB)	TC	TC	TC	TC	TC	TC	TC
-19.3	-20.0	1.5	1.4	1.4	1.4	1.4	1.4	1.4
-15.0	-16.0	1.7	1.7	1.7	1.7	1.7	1.7	1.7
-12.0	-13.0	1.9	1.9	1.9	1.8	1.8	1.8	1.8
-9.0	-10.0	2.1	2.1	2.0	2.0	2.0	2.0	2.0
-7.0	-8.0	2.2	2.2	2.2	2.2	2.2	2.1	2.1
-5.0	-6.0	2.3	2.3	2.3	2.3	2.3	2.3	2.2
-3.0	-4.0	2.4	2.4	2.4	2.4	2.4	2.4	2.2
-1.0	-2.0	2.6	2.6	2.5	2.5	2.5	2.4	2.2
0.0	-1.0	2.6	2.6	2.6	2.6	2.6	2.4	2.2
2.0	1.0	2.8	2.8	2.7	2.7	2.6	2.4	2.2
5.0	4.0	3.0	3.0	2.8	2.7	2.6	2.4	2.2
7.0	6.0	3.1	3.0	2.8	2.7	2.6	2.4	2.2
9.0	7.8	3.2	3.0	2.8	2.7	2.6	2.4	2.2
12.0	10.6	3.2	3.0	2.8	2.7	2.6	2.4	2.2
15.0	13.5	3.2	3.0	2.8	2.7	2.6	2.4	2.2

■ MODEL : ARXD09GALH

Outdoor Temperature		Indoor temperature						
		16°CDB	18°CDB	20°CDB	21°CDB	22°CDB	24°CDB	26°CDB
(°CDB)	(°CWB)	TC	TC	TC	TC	TC	TC	TC
-19.3	-20.0	1.7	1.7	1.7	1.7	1.6	1.6	1.6
-15.0	-16.0	1.9	1.9	1.9	1.9	1.9	1.9	1.9
-12.0	-13.0	2.1	2.1	2.1	2.1	2.1	2.1	2.1
-9.0	-10.0	2.4	2.3	2.3	2.3	2.3	2.3	2.3
-7.0	-8.0	2.5	2.5	2.5	2.5	2.5	2.4	2.4
-5.0	-6.0	2.6	2.6	2.6	2.6	2.6	2.6	2.5
-3.0	-4.0	2.8	2.8	2.8	2.8	2.7	2.7	2.5
-1.0	-2.0	2.9	2.9	2.9	2.9	2.9	2.7	2.5
0.0	-1.0	3.0	3.0	3.0	3.0	3.0	2.7	2.5
2.0	1.0	3.2	3.1	3.1	3.1	3.0	2.8	2.5
5.0	4.0	3.4	3.4	3.2	3.1	3.0	2.8	2.6
7.0	6.0	3.5	3.4	3.2	3.1	3.0	2.8	2.6
9.0	7.8	3.6	3.4	3.2	3.1	3.0	2.8	2.6
12.0	10.6	3.6	3.4	3.2	3.1	3.0	2.8	2.6
15.0	13.5	3.6	3.4	3.2	3.1	3.0	2.8	2.6

■ MODEL : ARXD12GALH

Outdoor Temperature		Indoor temperature						
		16°CDB	18°CDB	20°CDB	21°CDB	22°CDB	24°CDB	26°CDB
(°CDB)	(°CWB)	TC	TC	TC	TC	TC	TC	TC
-19.3	-20.0	2.1	2.1	2.1	2.1	2.1	2.1	2.0
-15.0	-16.0	2.4	2.4	2.4	2.4	2.4	2.4	2.4
-12.0	-13.0	2.7	2.7	2.7	2.6	2.6	2.6	2.6
-9.0	-10.0	2.9	2.9	2.9	2.9	2.9	2.9	2.9
-7.0	-8.0	3.1	3.1	3.1	3.1	3.1	3.1	3.0
-5.0	-6.0	3.3	3.3	3.3	3.3	3.3	3.2	3.1
-3.0	-4.0	3.5	3.5	3.5	3.4	3.4	3.4	3.2
-1.0	-2.0	3.7	3.7	3.6	3.6	3.6	3.4	3.2
0.0	-1.0	3.8	3.7	3.7	3.7	3.7	3.4	3.2
2.0	1.0	4.0	3.9	3.9	3.8	3.7	3.4	3.2
5.0	4.0	4.3	4.2	4.0	3.9	3.7	3.5	3.2
7.0	6.0	4.4	4.3	4.0	3.9	3.7	3.5	3.2
9.0	7.8	4.5	4.3	4.0	3.9	3.7	3.5	3.2
12.0	10.6	4.5	4.3	4.0	3.9	3.7	3.5	3.2
15.0	13.5	4.5	4.3	4.0	3.9	3.7	3.5	3.2

TC : Total Capacity kW.

MODEL SELECTION

HEATING CAPACITY

■ MODEL : ARXD14GALH

Outdoor Temperature		Indoor temperature						
		16°CDB	18°CDB	20°CDB	21°CDB	22°CDB	24°CDB	26°CDB
(°CDB)	(°CWB)	TC	TC	TC	TC	TC	TC	TC
-19.3	**-20.0**	2.6	2.6	2.6	2.6	2.6	2.6	2.6
-15.0	**-16.0**	3.0	3.0	3.0	3.0	3.0	3.0	3.0
-12.0	**-13.0**	3.3	3.3	3.3	3.3	3.3	3.3	3.3
-9.0	**-10.0**	3.7	3.7	3.6	3.6	3.6	3.6	3.6
-7.0	**-8.0**	3.9	3.9	3.9	3.9	3.8	3.8	3.8
-5.0	**-6.0**	4.1	4.1	4.1	4.1	4.1	4.0	3.9
-3.0	**-4.0**	4.4	4.3	4.3	4.3	4.3	4.3	4.0
-1.0	**-2.0**	4.6	4.6	4.5	4.5	4.5	4.3	4.0
0.0	**-1.0**	4.7	4.7	4.7	4.6	4.6	4.3	4.0
2.0	**1.0**	5.0	4.9	4.9	4.8	4.6	4.3	4.0
5.0	**4.0**	5.3	5.3	5.0	4.8	4.7	4.3	4.0
7.0	**6.0**	5.5	5.3	5.0	4.8	4.7	4.3	4.0
9.0	**7.8**	5.7	5.3	5.0	4.8	4.7	4.3	4.0
12.0	**10.6**	5.7	5.3	5.0	4.8	4.7	4.3	4.0
15.0	**13.5**	5.7	5.3	5.0	4.8	4.7	4.3	4.0

■ MODEL : ARXD18GALH

Outdoor Temperature		Indoor temperature						
		16°CDB	18°CDB	20°CDB	21°CDB	22°CDB	24°CDB	26°CDB
(°CDB)	(°CWB)	TC	TC	TC	TC	TC	TC	TC
-19.3	**-20.0**	3.3	3.3	3.3	3.3	3.2	3.2	3.2
-15.0	**-16.0**	3.8	3.8	3.8	3.8	3.8	3.7	3.7
-12.0	**-13.0**	4.2	4.2	4.2	4.2	4.2	4.1	4.1
-9.0	**-10.0**	4.6	4.6	4.6	4.6	4.6	4.5	4.5
-7.0	**-8.0**	4.9	4.9	4.9	4.9	4.8	4.8	4.8
-5.0	**-6.0**	5.2	5.2	5.2	5.1	5.1	5.1	5.0
-3.0	**-4.0**	5.5	5.5	5.4	5.4	5.4	5.4	5.0
-1.0	**-2.0**	5.8	5.8	5.7	5.7	5.7	5.4	5.0
0.0	**-1.0**	5.9	5.9	5.9	5.8	5.8	5.4	5.0
2.0	**1.0**	6.2	6.2	6.2	6.0	5.8	5.4	5.0
5.0	**4.0**	6.7	6.7	6.3	6.1	5.9	5.5	5.0
7.0	**6.0**	7.0	6.7	6.3	6.1	5.9	5.5	5.0
9.0	**7.8**	7.1	6.7	6.3	6.1	5.9	5.5	5.0
12.0	**10.6**	7.1	6.7	6.3	6.1	5.9	5.5	5.0
15.0	**13.5**	7.1	6.7	6.3	6.1	5.9	5.5	5.0

■ MODEL : ARXD24GALH

Outdoor Temperature		Indoor temperature						
		16°CDB	18°CDB	20°CDB	21°CDB	22°CDB	24°CDB	26°CDB
(°CDB)	(°CWB)	TC	TC	TC	TC	TC	TC	TC
-19.3	**-20.0**	4.2	4.1	4.1	4.1	4.1	4.1	4.1
-15.0	**-16.0**	4.8	4.8	4.8	4.8	4.8	4.7	4.7
-12.0	**-13.0**	5.4	5.3	5.3	5.3	5.3	5.3	5.2
-9.0	**-10.0**	5.9	5.9	5.8	5.8	5.8	5.8	5.7
-7.0	**-8.0**	6.2	6.2	6.2	6.2	6.1	6.1	6.1
-5.0	**-6.0**	6.6	6.6	6.6	6.5	6.5	6.5	6.3
-3.0	**-4.0**	7.0	6.9	6.9	6.9	6.9	6.8	6.3
-1.0	**-2.0**	7.4	7.3	7.3	7.2	7.2	6.9	6.3
0.0	**-1.0**	7.5	7.5	7.4	7.4	7.4	6.9	6.3
2.0	**1.0**	7.9	7.9	7.8	7.7	7.4	6.9	6.3
5.0	**4.0**	8.5	8.5	8.0	7.7	7.5	6.9	6.4
7.0	**6.0**	8.9	8.5	8.0	7.7	7.5	6.9	6.4
9.0	**7.8**	9.1	8.5	8.0	7.7	7.5	6.9	6.4
12.0	**10.6**	9.1	8.5	8.0	7.7	7.5	6.9	6.4
15.0	**13.5**	9.1	8.5	8.0	7.7	7.5	6.9	6.4

TC : Total Capacity kW.

8-5. MEDIUM STATIC PRESSURE DUCT TYPE

HEATING CAPACITY

■ MODEL : ARXA24GBLH

Outdoor Temperature		Indoor temperature						
		16°CDB	18°CDB	20°CDB	21°CDB	22°CDB	24°CDB	26°CDB
(°CDB)	(°CWB)	TC	TC	TC	TC	TC	TC	TC
-19.3	**-20.0**	4.2	4.1	4.1	4.1	4.1	4.1	4.1
-15.0	**-16.0**	4.8	4.8	4.8	4.8	4.8	4.7	4.7
-12.0	**-13.0**	5.4	5.3	5.3	5.3	5.3	5.3	5.2
-9.0	**-10.0**	5.9	5.9	5.8	5.8	5.8	5.8	5.7
-7.0	**-8.0**	6.2	6.2	6.2	6.2	6.1	6.1	6.1
-5.0	**-6.0**	6.6	6.6	6.6	6.5	6.5	6.5	6.3
-3.0	**-4.0**	7.0	6.9	6.9	6.9	6.9	6.8	6.3
-1.0	**-2.0**	7.4	7.3	7.3	7.2	7.2	6.9	6.3
0.0	**-1.0**	7.5	7.5	7.4	7.4	7.4	6.9	6.3
2.0	**1.0**	7.9	7.9	7.8	7.7	7.4	6.9	6.3
5.0	**4.0**	8.5	8.5	8.0	7.7	7.5	6.9	6.4
7.0	**6.0**	8.9	8.5	8.0	7.7	7.5	6.9	6.4
9.0	**7.8**	9.1	8.5	8.0	7.7	7.5	6.9	6.4
12.0	**10.6**	9.1	8.5	8.0	7.7	7.5	6.9	6.4
15.0	**13.5**	9.1	8.5	8.0	7.7	7.5	6.9	6.4

■ MODEL : ARXA30GBLH

Outdoor Temperature		Indoor temperature						
		16°CDB	18°CDB	20°CDB	21°CDB	22°CDB	24°CDB	26°CDB
(°CDB)	(°CWB)	TC	TC	TC	TC	TC	TC	TC
-19.3	**-20.0**	5.2	5.2	5.2	5.2	5.1	5.1	5.1
-15.0	**-16.0**	6.0	6.0	6.0	6.0	6.0	5.9	5.9
-12.0	**-13.0**	6.7	6.7	6.6	6.6	6.6	6.6	6.5
-9.0	**-10.0**	7.4	7.3	7.3	7.3	7.2	7.2	7.2
-7.0	**-8.0**	7.8	7.8	7.7	7.7	7.7	7.7	7.6
-5.0	**-6.0**	8.3	8.2	8.2	8.2	8.1	8.1	7.9
-3.0	**-4.0**	8.7	8.7	8.6	8.6	8.6	8.5	7.9
-1.0	**-2.0**	9.2	9.1	9.1	9.0	9.0	8.6	7.9
0.0	**-1.0**	9.4	9.4	9.3	9.3	9.2	8.6	7.9
2.0	**1.0**	9.9	9.8	9.8	9.6	9.3	8.6	7.9
5.0	**4.0**	10.6	10.6	10.0	9.7	9.3	8.7	8.0
7.0	**6.0**	11.1	10.6	10.0	9.7	9.3	8.7	8.0
9.0	**7.8**	11.3	10.6	10.0	9.7	9.3	8.7	8.0
12.0	**10.6**	11.3	10.7	10.0	9.7	9.3	8.7	8.0
15.0	**13.5**	11.3	10.7	10.0	9.7	9.3	8.7	8.0

■ MODEL : ARXA36GBLH

Outdoor Temperature		Indoor temperature						
		16°CDB	18°CDB	20°CDB	21°CDB	22°CDB	24°CDB	26°CDB
(°CDB)	(°CWB)	TC	TC	TC	TC	TC	TC	TC
-19.3	**-20.0**	6.5	6.5	6.5	6.5	6.4	6.4	6.4
-15.0	**-16.0**	7.5	7.5	7.5	7.5	7.5	7.4	7.4
-12.0	**-13.0**	8.4	8.3	8.3	8.3	8.3	8.2	8.2
-9.0	**-10.0**	9.2	9.2	9.1	9.1	9.0	9.0	9.0
-7.0	**-8.0**	9.8	9.7	9.6	9.6	9.6	9.6	9.5
-5.0	**-6.0**	10.3	10.3	10.2	10.2	10.2	10.1	9.8
-3.0	**-4.0**	10.9	10.8	10.8	10.8	10.7	10.7	9.9
-1.0	**-2.0**	11.5	11.4	11.3	11.3	11.3	10.7	9.9
0.0	**-1.0**	11.8	11.7	11.6	11.6	11.5	10.7	9.9
2.0	**1.0**	12.4	12.3	12.2	12.0	11.6	10.8	9.9
5.0	**4.0**	13.3	13.2	12.5	12.1	11.7	10.8	10.0
7.0	**6.0**	13.8	13.3	12.5	12.1	11.7	10.8	10.0
9.0	**7.8**	14.2	13.3	12.5	12.1	11.7	10.8	10.0
12.0	**10.6**	14.2	13.3	12.5	12.1	11.7	10.8	10.0
15.0	**13.5**	14.2	13.3	12.5	12.1	11.7	10.8	10.0

■ MODEL : ARXA45GBLH

Outdoor Temperature		Indoor temperature						
		16°CDB	18°CDB	20°CDB	21°CDB	22°CDB	24°CDB	26°CDB
(°CDB)	(°CWB)	TC	TC	TC	TC	TC	TC	TC
-19.3	**-20.0**	7.3	7.2	7.2	7.2	7.2	7.2	7.2
-15.0	**-16.0**	8.4	8.4	8.4	8.4	8.4	8.3	8.3
-12.0	**-13.0**	9.4	9.3	9.3	9.2	9.2	9.2	9.2
-9.0	**-10.0**	10.3	10.3	10.2	10.2	10.1	10.1	10.0
-7.0	**-8.0**	10.9	10.9	10.8	10.8	10.8	10.7	10.7
-5.0	**-6.0**	11.6	11.5	11.5	11.4	11.4	11.3	11.0
-3.0	**-4.0**	12.2	12.1	12.1	12.0	12.0	12.0	11.1
-1.0	**-2.0**	12.9	12.8	12.7	12.7	12.6	12.0	11.1
0.0	**-1.0**	13.2	13.1	13.0	13.0	12.9	12.0	11.1
2.0	**1.0**	13.9	13.8	13.7	13.4	13.0	12.0	11.1
5.0	**4.0**	14.9	14.8	14.0	13.5	13.1	12.1	11.2
7.0	**6.0**	15.5	14.9	14.0	13.5	13.1	12.1	11.2
9.0	**7.8**	15.9	14.9	14.0	13.5	13.1	12.1	11.2
12.0	**10.6**	15.9	14.9	14.0	13.5	13.1	12.1	11.2
15.0	**13.5**	15.9	14.9	14.0	13.5	13.1	12.1	11.2

TC : Total Capacity kW.

MODEL SELECTION

8-6. HIGH STATIC PRESSURE DUCT TYPE

HEATING CAPACITY

■ MODEL : ARXC36GATH

Outdoor Temperature		Indoor temperature						
		16°CDB	18°CDB	20°CDB	21°CDB	22°CDB	24°CDB	26°CDB
(°CDB)	(°CWB)	TC	TC	TC	TC	TC	TC	TC
-19.3	**-20.0**	6.5	6.5	6.5	6.5	6.4	6.4	6.4
-15.0	**-16.0**	7.5	7.5	7.5	7.5	7.5	7.4	7.4
-12.0	**-13.0**	8.4	8.3	8.3	8.3	8.3	8.2	8.2
-9.0	**-10.0**	9.2	9.2	9.1	9.1	9.0	9.0	9.0
-7.0	**-8.0**	9.8	9.7	9.6	9.6	9.6	9.6	9.5
-5.0	**-6.0**	10.3	10.3	10.2	10.2	10.2	10.1	9.8
-3.0	**-4.0**	10.9	10.8	10.8	10.8	10.7	10.7	9.9
-1.0	**-2.0**	11.5	11.4	11.3	11.3	11.3	10.7	9.9
0.0	**-1.0**	11.8	11.7	11.6	11.6	11.5	10.7	9.9
2.0	**1.0**	12.4	12.3	12.2	12.0	11.6	10.8	9.9
5.0	**4.0**	13.3	13.2	12.5	12.1	11.7	10.8	10.0
7.0	**6.0**	13.8	13.3	12.5	12.1	11.7	10.8	10.0
9.0	**7.8**	14.2	13.3	12.5	12.1	11.7	10.8	10.0
12.0	**10.6**	14.2	13.3	12.5	12.1	11.7	10.8	10.0
15.0	**13.5**	14.2	13.3	12.5	12.1	11.7	10.8	10.0

■ MODEL : ARXC45GATH

Outdoor Temperature		Indoor temperature						
		16°CDB	18°CDB	20°CDB	21°CDB	22°CDB	24°CDB	26°CDB
(°CDB)	(°CWB)	TC	TC	TC	TC	TC	TC	TC
-19.3	**-20.0**	7.3	7.2	7.2	7.2	7.2	7.2	7.2
-15.0	**-16.0**	8.4	8.4	8.4	8.4	8.4	8.3	8.3
-12.0	**-13.0**	9.4	9.3	9.3	9.2	9.2	9.2	9.2
-9.0	**-10.0**	10.3	10.3	10.2	10.2	10.1	10.1	10.0
-7.0	**-8.0**	10.9	10.9	10.8	10.8	10.8	10.7	10.7
-5.0	**-6.0**	11.6	11.5	11.5	11.4	11.4	11.3	11.0
-3.0	**-4.0**	12.2	12.1	12.1	12.0	12.0	12.0	11.1
-1.0	**-2.0**	12.9	12.8	12.7	12.7	12.6	12.0	11.1
0.0	**-1.0**	13.2	13.1	13.0	13.0	12.9	12.0	11.1
2.0	**1.0**	13.9	13.8	13.7	13.4	13.0	12.0	11.1
5.0	**4.0**	14.9	14.8	14.0	13.5	13.1	12.1	11.2
7.0	**6.0**	15.5	14.9	14.0	13.5	13.1	12.1	11.2
9.0	**7.8**	15.9	14.9	14.0	13.5	13.1	12.1	11.2
12.0	**10.6**	15.9	14.9	14.0	13.5	13.1	12.1	11.2
15.0	**13.5**	15.9	14.9	14.0	13.5	13.1	12.1	11.2

TC : Total Capacity kW.

MODEL SELECTION

8-7. FLOOR / CEILING TYPE

HEATING CAPACITY

■ MODEL : AB∗A12GATH

Outdoor Temperature		Indoor temperature						
		16°CDB	18°CDB	20°CDB	21°CDB	22°CDB	24°CDB	26°CDB
(°CDB)	(°CWB)	TC	TC	TC	TC	TC	TC	TC
-19.3	**-20.0**	2.1	2.1	2.1	2.1	2.1	2.1	2.0
-15.0	**-16.0**	2.4	2.4	2.4	2.4	2.4	2.4	2.4
-12.0	**-13.0**	2.7	2.7	2.7	2.6	2.6	2.6	2.6
-9.0	**-10.0**	2.9	2.9	2.9	2.9	2.9	2.9	2.9
-7.0	**-8.0**	3.1	3.1	3.1	3.1	3.1	3.1	3.0
-5.0	**-6.0**	3.3	3.3	3.3	3.3	3.3	3.2	3.1
-3.0	**-4.0**	3.5	3.5	3.5	3.4	3.4	3.4	3.2
-1.0	**-2.0**	3.7	3.7	3.6	3.6	3.6	3.4	3.2
0.0	**-1.0**	3.8	3.7	3.7	3.7	3.7	3.4	3.2
2.0	**1.0**	4.0	3.9	3.9	3.8	3.7	3.4	3.2
5.0	**4.0**	4.3	4.2	4.0	3.9	3.7	3.5	3.2
7.0	**6.0**	4.4	4.3	4.0	3.9	3.7	3.5	3.2
9.0	**7.8**	4.5	4.3	4.0	3.9	3.7	3.5	3.2
12.0	**10.6**	4.5	4.3	4.0	3.9	3.7	3.5	3.2
15.0	**13.5**	4.5	4.3	4.0	3.9	3.7	3.5	3.2

■ MODEL : AB∗A14GATH

Outdoor Temperature		Indoor temperature						
		16°CDB	18°CDB	20°CDB	21°CDB	22°CDB	24°CDB	26°CDB
(°CDB)	(°CWB)	TC	TC	TC	TC	TC	TC	TC
-19.3	**-20.0**	2.6	2.6	2.6	2.6	2.6	2.6	2.6
-15.0	**-16.0**	3.0	3.0	3.0	3.0	3.0	3.0	3.0
-12.0	**-13.0**	3.3	3.3	3.3	3.3	3.3	3.3	3.3
-9.0	**-10.0**	3.7	3.7	3.6	3.6	3.6	3.6	3.6
-7.0	**-8.0**	3.9	3.9	3.9	3.9	3.8	3.8	3.8
-5.0	**-6.0**	4.1	4.1	4.1	4.1	4.1	4.0	3.9
-3.0	**-4.0**	4.4	4.3	4.3	4.3	4.3	4.3	4.0
-1.0	**-2.0**	4.6	4.6	4.5	4.5	4.5	4.3	4.0
0.0	**-1.0**	4.7	4.7	4.7	4.6	4.6	4.3	4.0
2.0	**1.0**	5.0	4.9	4.9	4.8	4.6	4.3	4.0
5.0	**4.0**	5.3	5.3	5.0	4.8	4.7	4.3	4.0
7.0	**6.0**	5.5	5.3	5.0	4.8	4.7	4.3	4.0
9.0	**7.8**	5.7	5.3	5.0	4.8	4.7	4.3	4.0
12.0	**10.6**	5.7	5.3	5.0	4.8	4.7	4.3	4.0
15.0	**13.5**	5.7	5.3	5.0	4.8	4.7	4.3	4.0

■ MODEL : AB∗A18GATH

Outdoor Temperature		Indoor temperature						
		16°CDB	18°CDB	20°CDB	21°CDB	22°CDB	24°CDB	26°CDB
(°CDB)	(°CWB)	TC	TC	TC	TC	TC	TC	TC
-19.3	**-20.0**	3.3	3.3	3.3	3.3	3.2	3.2	3.2
-15.0	**-16.0**	3.8	3.8	3.8	3.8	3.8	3.7	3.7
-12.0	**-13.0**	4.2	4.2	4.2	4.2	4.2	4.1	4.1
-9.0	**-10.0**	4.6	4.6	4.6	4.6	4.6	4.5	4.5
-7.0	**-8.0**	4.9	4.9	4.9	4.9	4.8	4.8	4.8
-5.0	**-6.0**	5.2	5.2	5.2	5.1	5.1	5.1	5.0
-3.0	**-4.0**	5.5	5.5	5.4	5.4	5.4	5.4	5.0
-1.0	**-2.0**	5.8	5.8	5.7	5.7	5.7	5.4	5.0
0.0	**-1.0**	5.9	5.9	5.9	5.8	5.8	5.4	5.0
2.0	**1.0**	6.2	6.2	6.2	6.0	5.8	5.4	5.0
5.0	**4.0**	6.7	6.7	6.3	6.1	5.9	5.5	5.0
7.0	**6.0**	7.0	6.7	6.3	6.1	5.9	5.5	5.0
9.0	**7.8**	7.1	6.7	6.3	6.1	5.9	5.5	5.0
12.0	**10.6**	7.1	6.7	6.3	6.1	5.9	5.5	5.0
15.0	**13.5**	7.1	6.7	6.3	6.1	5.9	5.5	5.0

■ MODEL : AB∗A24GATH

Outdoor Temperature		Indoor temperature						
		16°CDB	18°CDB	20°CDB	21°CDB	22°CDB	24°CDB	26°CDB
(°CDB)	(°CWB)	TC	TC	TC	TC	TC	TC	TC
-19.3	**-20.0**	4.2	4.1	4.1	4.1	4.1	4.1	4.1
-15.0	**-16.0**	4.8	4.8	4.8	4.8	4.8	4.7	4.7
-12.0	**-13.0**	5.4	5.3	5.3	5.3	5.3	5.3	5.2
-9.0	**-10.0**	5.9	5.9	5.8	5.8	5.8	5.8	5.7
-7.0	**-8.0**	6.2	6.2	6.2	6.2	6.1	6.1	6.1
-5.0	**-6.0**	6.6	6.6	6.6	6.5	6.5	6.5	6.3
-3.0	**-4.0**	7.0	6.9	6.9	6.9	6.9	6.8	6.3
-1.0	**-2.0**	7.4	7.3	7.3	7.2	7.2	6.9	6.3
0.0	**-1.0**	7.5	7.5	7.4	7.4	7.4	6.9	6.3
2.0	**1.0**	7.9	7.9	7.8	7.7	7.4	6.9	6.3
5.0	**4.0**	8.5	8.5	8.0	7.7	7.5	6.9	6.4
7.0	**6.0**	8.9	8.5	8.0	7.7	7.5	6.9	6.4
9.0	**7.8**	9.1	8.5	8.0	7.7	7.5	6.9	6.4
12.0	**10.6**	9.1	8.5	8.0	7.7	7.5	6.9	6.4
15.0	**13.5**	9.1	8.5	8.0	7.7	7.5	6.9	6.4

TC : Total Capacity kW.

MODEL SELECTION

8-8. CEILING TYPE

HEATING CAPACITY

■ MODEL : AB∗A30GATH

Outdoor Temperature		Indoor temperature						
		16°CDB	18°CDB	20°CDB	21°CDB	22°CDB	24°CDB	26°CDB
(°CDB)	(°CWB)	TC	TC	TC	TC	TC	TC	TC
-19.3	**-20.0**	5.2	5.2	5.2	5.2	5.1	5.1	5.1
-15.0	**-16.0**	6.0	6.0	6.0	6.0	6.0	5.9	5.9
-12.0	**-13.0**	6.7	6.7	6.6	6.6	6.6	6.6	6.5
-9.0	**-10.0**	7.4	7.3	7.3	7.3	7.2	7.2	7.2
-7.0	**-8.0**	7.8	7.8	7.7	7.7	7.7	7.7	7.6
-5.0	**-6.0**	8.3	8.2	8.2	8.2	8.1	8.1	7.9
-3.0	**-4.0**	8.7	8.7	8.6	8.6	8.6	8.5	7.9
-1.0	**-2.0**	9.2	9.1	9.1	9.0	9.0	8.6	7.9
0.0	**-1.0**	9.4	9.4	9.3	9.3	9.2	8.6	7.9
2.0	**1.0**	9.9	9.8	9.8	9.6	9.3	8.6	7.9
5.0	**4.0**	10.6	10.6	10.0	9.7	9.3	8.7	8.0
7.0	**6.0**	11.1	10.6	10.0	9.7	9.3	8.7	8.0
9.0	**7.8**	11.3	10.6	10.0	9.7	9.3	8.7	8.0
12.0	**10.6**	11.3	10.7	10.0	9.7	9.3	8.7	8.0
15.0	**13.5**	11.3	10.7	10.0	9.7	9.3	8.7	8.0

■ MODEL : AB∗A36GATH

Outdoor Temperature		Indoor temperature						
		16°CDB	18°CDB	20°CDB	21°CDB	22°CDB	24°CDB	26°CDB
(°CDB)	(°CWB)	TC	TC	TC	TC	TC	TC	TC
-19.3	**-20.0**	6.5	6.5	6.5	6.5	6.4	6.4	6.4
-15.0	**-16.0**	7.5	7.5	7.5	7.5	7.5	7.4	7.4
-12.0	**-13.0**	8.4	8.3	8.3	8.3	8.3	8.2	8.2
-9.0	**-10.0**	9.2	9.2	9.1	9.1	9.0	9.0	9.0
-7.0	**-8.0**	9.8	9.7	9.6	9.6	9.6	9.6	9.5
-5.0	**-6.0**	10.3	10.3	10.2	10.2	10.2	10.1	9.8
-3.0	**-4.0**	10.9	10.8	10.8	10.8	10.7	10.7	9.9
-1.0	**-2.0**	11.5	11.4	11.3	11.3	11.3	10.7	9.9
0.0	**-1.0**	11.8	11.7	11.6	11.6	11.5	10.7	9.9
2.0	**1.0**	12.4	12.3	12.2	12.0	11.6	10.8	9.9
5.0	**4.0**	13.3	13.2	12.5	12.1	11.7	10.8	10.0
7.0	**6.0**	13.8	13.3	12.5	12.1	11.7	10.8	10.0
9.0	**7.8**	14.2	13.3	12.5	12.1	11.7	10.8	10.0
12.0	**10.6**	14.2	13.3	12.5	12.1	11.7	10.8	10.0
15.0	**13.5**	14.2	13.3	12.5	12.1	11.7	10.8	10.0

■ MODEL : AB∗A45GATH

Outdoor Temperature		Indoor temperature						
		16°CDB	18°CDB	20°CDB	21°CDB	22°CDB	24°CDB	26°CDB
(°CDB)	(°CWB)	TC	TC	TC	TC	TC	TC	TC
-19.3	**-20.0**	7.3	7.2	7.2	7.2	7.2	7.2	7.2
-15.0	**-16.0**	8.4	8.4	8.4	8.4	8.4	8.3	8.3
-12.0	**-13.0**	9.4	9.3	9.3	9.2	9.2	9.2	9.2
-9.0	**-10.0**	10.3	10.3	10.2	10.2	10.1	10.1	10.0
-7.0	**-8.0**	10.9	10.9	10.8	10.8	10.8	10.7	10.7
-5.0	**-6.0**	11.6	11.5	11.5	11.4	11.4	11.3	11.0
-3.0	**-4.0**	12.2	12.1	12.1	12.0	12.0	12.0	11.1
-1.0	**-2.0**	12.9	12.8	12.7	12.7	12.6	12.0	11.1
0.0	**-1.0**	13.2	13.1	13.0	13.0	12.9	12.0	11.1
2.0	**1.0**	13.9	13.8	13.7	13.4	13.0	12.0	11.1
5.0	**4.0**	14.9	14.8	14.0	13.5	13.1	12.1	11.2
7.0	**6.0**	15.5	14.9	14.0	13.5	13.1	12.1	11.2
9.0	**7.8**	15.9	14.9	14.0	13.5	13.1	12.1	11.2
12.0	**10.6**	15.9	14.9	14.0	13.5	13.1	12.1	11.2
15.0	**13.5**	15.9	14.9	14.0	13.5	13.1	12.1	11.2

■ MODEL : AB∗A54GATH

Outdoor Temperature		Indoor temperature						
		16°CDB	18°CDB	20°CDB	21°CDB	22°CDB	24°CDB	26°CDB
(°CDB)	(°CWB)	TC	TC	TC	TC	TC	TC	TC
-19.3	**-20.0**	8.3	8.3	8.3	8.3	8.2	8.2	8.2
-15.0	**-16.0**	9.7	9.6	9.6	9.5	9.5	9.5	9.5
-12.0	**-13.0**	10.7	10.7	10.6	10.6	10.6	10.5	10.5
-9.0	**-10.0**	11.8	11.7	11.6	11.6	11.6	11.5	11.5
-7.0	**-8.0**	12.5	12.4	12.3	12.3	12.3	12.2	12.2
-5.0	**-6.0**	13.2	13.2	13.1	13.1	13.0	13.0	12.6
-3.0	**-4.0**	14.0	13.9	13.8	13.8	13.7	13.7	12.6
-1.0	**-2.0**	14.7	14.6	14.5	14.5	14.4	13.7	12.6
0.0	**-1.0**	15.1	15.0	14.9	14.8	14.8	13.7	12.6
2.0	**1.0**	15.8	15.7	15.6	15.3	14.8	13.8	12.7
5.0	**4.0**	17.0	16.9	16.0	15.4	14.9	13.9	12.8
7.0	**6.0**	17.7	17.0	16.0	15.4	14.9	13.9	12.8
9.0	**7.8**	18.1	17.0	16.0	15.4	14.9	13.9	12.8
12.0	**10.6**	18.1	17.1	16.0	15.4	14.9	13.9	12.8
15.0	**13.5**	18.1	17.1	16.0	15.4	14.9	13.9	12.8

TC : Total Capacity kW.

8-9. WALL MOUNTED TYPE (EEV external model)

HEATING CAPACITY

■ MODEL : AS∗E04GACH

Outdoor Temperature		Indoor temperature						
		16°CDB	18°CDB	20°CDB	21°CDB	22°CDB	24°CDB	26°CDB
(°CDB)	(°CWB)	TC	TC	TC	TC	TC	TC	TC
-19.3	-20.0	0.7	0.7	0.7	0.7	0.7	0.7	0.7
-15.0	-16.0	0.8	0.8	0.8	0.8	0.8	0.8	0.8
-12.0	-13.0	0.9	0.9	0.9	0.8	0.8	0.8	0.8
-9.0	-10.0	1.0	1.0	0.9	0.9	0.9	0.9	0.9
-7.0	-8.0	1.0	1.0	1.0	1.0	1.0	1.0	1.0
-5.0	-6.0	1.1	1.1	1.1	1.1	1.1	1.1	1.0
-3.0	-4.0	1.1	1.1	1.1	1.1	1.1	1.1	1.0
-1.0	-2.0	1.2	1.2	1.2	1.2	1.2	1.1	1.0
0.0	-1.0	1.2	1.2	1.2	1.2	1.2	1.1	1.0
2.0	1.0	1.3	1.3	1.3	1.3	1.2	1.1	1.0
5.0	4.0	1.4	1.4	1.3	1.3	1.2	1.1	1.0
7.0	6.0	1.4	1.4	1.3	1.3	1.2	1.1	1.0
9.0	7.8	1.5	1.4	1.3	1.3	1.2	1.1	1.0
12.0	10.6	1.5	1.4	1.3	1.3	1.2	1.1	1.0
15.0	13.5	1.5	1.4	1.3	1.3	1.2	1.1	1.0

■ MODEL : AS∗E07GACH

Outdoor Temperature		Indoor temperature						
		16°CDB	18°CDB	20°CDB	21°CDB	22°CDB	24°CDB	26°CDB
(°CDB)	(°CWB)	TC	TC	TC	TC	TC	TC	TC
-19.3	-20.0	1.5	1.4	1.4	1.4	1.4	1.4	1.4
-15.0	-16.0	1.7	1.7	1.7	1.7	1.7	1.7	1.7
-12.0	-13.0	1.9	1.9	1.9	1.8	1.8	1.8	1.8
-9.0	-10.0	2.1	2.1	2.0	2.0	2.0	2.0	2.0
-7.0	-8.0	2.2	2.2	2.2	2.2	2.2	2.1	2.1
-5.0	-6.0	2.3	2.3	2.3	2.3	2.3	2.3	2.2
-3.0	-4.0	2.4	2.4	2.4	2.4	2.4	2.4	2.2
-1.0	-2.0	2.6	2.6	2.5	2.5	2.5	2.4	2.2
0.0	-1.0	2.6	2.6	2.6	2.6	2.6	2.4	2.2
2.0	1.0	2.8	2.8	2.7	2.7	2.6	2.4	2.2
5.0	4.0	3.0	3.0	2.8	2.7	2.6	2.4	2.2
7.0	6.0	3.1	3.0	2.8	2.7	2.6	2.4	2.2
9.0	7.8	3.2	3.0	2.8	2.7	2.6	2.4	2.2
12.0	10.6	3.2	3.0	2.8	2.7	2.6	2.4	2.2
15.0	13.5	3.2	3.0	2.8	2.7	2.6	2.4	2.2

■ MODEL : AS∗E09GACH

Outdoor Temperature		Indoor temperature						
		16°CDB	18°CDB	20°CDB	21°CDB	22°CDB	24°CDB	26°CDB
(°CDB)	(°CWB)	TC	TC	TC	TC	TC	TC	TC
-19.3	-20.0	1.7	1.7	1.7	1.7	1.6	1.6	1.6
-15.0	-16.0	1.9	1.9	1.9	1.9	1.9	1.9	1.9
-12.0	-13.0	2.1	2.1	2.1	2.1	2.1	2.1	2.1
-9.0	-10.0	2.4	2.3	2.3	2.3	2.3	2.3	2.3
-7.0	-8.0	2.5	2.5	2.5	2.5	2.5	2.4	2.4
-5.0	-6.0	2.6	2.6	2.6	2.6	2.6	2.6	2.5
-3.0	-4.0	2.8	2.8	2.8	2.8	2.7	2.7	2.5
-1.0	-2.0	2.9	2.9	2.9	2.9	2.9	2.7	2.5
0.0	-1.0	3.0	3.0	3.0	3.0	3.0	2.7	2.5
2.0	1.0	3.2	3.1	3.1	3.1	3.0	2.8	2.5
5.0	4.0	3.4	3.4	3.2	3.1	3.0	2.8	2.6
7.0	6.0	3.5	3.4	3.2	3.1	3.0	2.8	2.6
9.0	7.8	3.6	3.4	3.2	3.1	3.0	2.8	2.6
12.0	10.6	3.6	3.4	3.2	3.1	3.0	2.8	2.6
15.0	13.5	3.6	3.4	3.2	3.1	3.0	2.8	2.6

TC : Total Capacity kW.

MODEL SELECTION

HEATING CAPACITY

■ MODEL : AS∗E12GACH

Outdoor Temperature		Indoor temperature						
		16°CDB	18°CDB	20°CDB	21°CDB	22°CDB	24°CDB	26°CDB
(°CDB)	(°CWB)	TC	TC	TC	TC	TC	TC	TC
-19.3	**-20.0**	2.1	2.1	2.1	2.1	2.1	2.1	2.1
-15.0	**-16.0**	2.5	2.5	2.5	2.4	2.4	2.4	2.4
-12.0	**-13.0**	2.7	2.7	2.7	2.7	2.7	2.7	2.7
-9.0	**-10.0**	3.0	3.0	3.0	3.0	3.0	3.0	2.9
-7.0	**-8.0**	3.2	3.2	3.2	3.2	3.1	3.1	3.1
-5.0	**-6.0**	3.4	3.4	3.4	3.3	3.3	3.3	3.2
-3.0	**-4.0**	3.6	3.6	3.5	3.5	3.5	3.5	3.2
-1.0	**-2.0**	3.8	3.7	3.7	3.7	3.7	3.5	3.2
0.0	**-1.0**	3.9	3.8	3.8	3.8	3.8	3.5	3.2
2.0	**1.0**	4.1	4.0	4.0	3.9	3.8	3.5	3.3
5.0	**4.0**	4.4	4.3	4.1	4.0	3.8	3.6	3.3
7.0	**6.0**	4.5	4.4	4.1	4.0	3.8	3.6	3.3
9.0	**7.8**	4.6	4.4	4.1	4.0	3.8	3.6	3.3
12.0	**10.6**	4.6	4.4	4.1	4.0	3.8	3.6	3.3
15.0	**13.5**	4.6	4.4	4.1	4.0	3.8	3.6	3.3

■ MODEL : AS∗E14GACH

Outdoor Temperature		Indoor temperature						
		16°CDB	18°CDB	20°CDB	21°CDB	22°CDB	24°CDB	26°CDB
(°CDB)	(°CWB)	TC	TC	TC	TC	TC	TC	TC
-19.3	**-20.0**	2.6	2.6	2.6	2.6	2.6	2.6	2.6
-15.0	**-16.0**	3.0	3.0	3.0	3.0	3.0	3.0	3.0
-12.0	**-13.0**	3.3	3.3	3.3	3.3	3.3	3.3	3.3
-9.0	**-10.0**	3.7	3.7	3.6	3.6	3.6	3.6	3.6
-7.0	**-8.0**	3.9	3.9	3.9	3.9	3.8	3.8	3.8
-5.0	**-6.0**	4.1	4.1	4.1	4.1	4.1	4.0	3.9
-3.0	**-4.0**	4.4	4.3	4.3	4.3	4.3	4.3	4.0
-1.0	**-2.0**	4.6	4.6	4.5	4.5	4.5	4.3	4.0
0.0	**-1.0**	4.7	4.7	4.7	4.6	4.6	4.3	4.0
2.0	**1.0**	5.0	4.9	4.9	4.8	4.6	4.3	4.0
5.0	**4.0**	5.3	5.3	5.0	4.8	4.7	4.3	4.0
7.0	**6.0**	5.5	5.3	5.0	4.8	4.7	4.3	4.0
9.0	**7.8**	5.7	5.3	5.0	4.8	4.7	4.3	4.0
12.0	**10.6**	5.7	5.3	5.0	4.8	4.7	4.3	4.0
15.0	**13.5**	5.7	5.3	5.0	4.8	4.7	4.3	4.0

TC : Total Capacity kW.

8-10. WALL MOUNTED TYPE

HEATING CAPACITY

■ MODEL : AS∗A04GACH

Outdoor Temperature		Indoor temperature						
		16°CDB	18°CDB	20°CDB	21°CDB	22°CDB	24°CDB	26°CDB
(°CDB)	(°CWB)	TC	TC	TC	TC	TC	TC	TC
-19.3	-20.0	0.7	0.7	0.7	0.7	0.7	0.7	0.7
-15.0	-16.0	0.8	0.8	0.8	0.8	0.8	0.8	0.8
-12.0	-13.0	0.9	0.9	0.9	0.8	0.8	0.8	0.8
-9.0	-10.0	1.0	1.0	0.9	0.9	0.9	0.9	0.9
-7.0	-8.0	1.0	1.0	1.0	1.0	1.0	1.0	1.0
-5.0	-6.0	1.1	1.1	1.1	1.1	1.1	1.1	1.0
-3.0	-4.0	1.1	1.1	1.1	1.1	1.1	1.1	1.0
-1.0	-2.0	1.2	1.2	1.2	1.2	1.2	1.1	1.0
0.0	-1.0	1.2	1.2	1.2	1.2	1.2	1.1	1.0
2.0	1.0	1.3	1.3	1.3	1.3	1.2	1.1	1.0
5.0	4.0	1.4	1.4	1.3	1.3	1.2	1.1	1.0
7.0	6.0	1.4	1.4	1.3	1.3	1.2	1.1	1.0
9.0	7.8	1.5	1.4	1.3	1.3	1.2	1.1	1.0
12.0	10.6	1.5	1.4	1.3	1.3	1.2	1.1	1.0
15.0	13.5	1.5	1.4	1.3	1.3	1.2	1.1	1.0

■ MODEL : AS∗A07GACH

Outdoor Temperature		Indoor temperature						
		16°CDB	18°CDB	20°CDB	21°CDB	22°CDB	24°CDB	26°CDB
(°CDB)	(°CWB)	TC	TC	TC	TC	TC	TC	TC
-19.3	-20.0	1.5	1.4	1.4	1.4	1.4	1.4	1.4
-15.0	-16.0	1.7	1.7	1.7	1.7	1.7	1.7	1.7
-12.0	-13.0	1.9	1.9	1.9	1.8	1.8	1.8	1.8
-9.0	-10.0	2.1	2.1	2.0	2.0	2.0	2.0	2.0
-7.0	-8.0	2.2	2.2	2.2	2.2	2.2	2.1	2.1
-5.0	-6.0	2.3	2.3	2.3	2.3	2.3	2.3	2.2
-3.0	-4.0	2.4	2.4	2.4	2.4	2.4	2.4	2.2
-1.0	-2.0	2.6	2.6	2.5	2.5	2.5	2.4	2.2
0.0	-1.0	2.6	2.6	2.6	2.6	2.6	2.4	2.2
2.0	1.0	2.8	2.8	2.7	2.7	2.6	2.4	2.2
5.0	4.0	3.0	3.0	2.8	2.7	2.6	2.4	2.2
7.0	6.0	3.1	3.0	2.8	2.7	2.6	2.4	2.2
9.0	7.8	3.2	3.0	2.8	2.7	2.6	2.4	2.2
12.0	10.6	3.2	3.0	2.8	2.7	2.6	2.4	2.2
15.0	13.5	3.2	3.0	2.8	2.7	2.6	2.4	2.2

■ MODEL : AS∗A09GACH

Outdoor Temperature		Indoor temperature						
		16°CDB	18°CDB	20°CDB	21°CDB	22°CDB	24°CDB	26°CDB
(°CDB)	(°CWB)	TC	TC	TC	TC	TC	TC	TC
-19.3	-20.0	1.7	1.7	1.7	1.7	1.6	1.6	1.6
-15.0	-16.0	1.9	1.9	1.9	1.9	1.9	1.9	1.9
-12.0	-13.0	2.1	2.1	2.1	2.1	2.1	2.1	2.1
-9.0	-10.0	2.4	2.3	2.3	2.3	2.3	2.3	2.3
-7.0	-8.0	2.5	2.5	2.5	2.5	2.5	2.4	2.4
-5.0	-6.0	2.6	2.6	2.6	2.6	2.6	2.6	2.5
-3.0	-4.0	2.8	2.8	2.8	2.8	2.7	2.7	2.5
-1.0	-2.0	2.9	2.9	2.9	2.9	2.9	2.7	2.5
0.0	-1.0	3.0	3.0	3.0	3.0	3.0	2.7	2.5
2.0	1.0	3.2	3.1	3.1	3.1	3.0	2.8	2.5
5.0	4.0	3.4	3.4	3.2	3.1	3.0	2.8	2.6
7.0	6.0	3.5	3.4	3.2	3.1	3.0	2.8	2.6
9.0	7.8	3.6	3.4	3.2	3.1	3.0	2.8	2.6
12.0	10.6	3.6	3.4	3.2	3.1	3.0	2.8	2.6
15.0	13.5	3.6	3.4	3.2	3.1	3.0	2.8	2.6

TC : Total Capacity kW.

MODEL SELECTION

HEATING CAPACITY

■ MODEL : AS∗A12GACH

Outdoor Temperature		Indoor temperature						
		16°CDB	18°CDB	20°CDB	21°CDB	22°CDB	24°CDB	26°CDB
(°CDB)	(°CWB)	TC	TC	TC	TC	TC	TC	TC
-19.3	**-20.0**	2.1	2.1	2.1	2.1	2.1	2.1	2.1
-15.0	**-16.0**	2.5	2.5	2.5	2.4	2.4	2.4	2.4
-12.0	**-13.0**	2.7	2.7	2.7	2.7	2.7	2.7	2.7
-9.0	**-10.0**	3.0	3.0	3.0	3.0	3.0	3.0	2.9
-7.0	**-8.0**	3.2	3.2	3.2	3.2	3.1	3.1	3.1
-5.0	**-6.0**	3.4	3.4	3.4	3.3	3.3	3.3	3.2
-3.0	**-4.0**	3.6	3.6	3.5	3.5	3.5	3.5	3.2
-1.0	**-2.0**	3.8	3.7	3.7	3.7	3.7	3.5	3.2
0.0	**-1.0**	3.9	3.8	3.8	3.8	3.8	3.5	3.2
2.0	**1.0**	4.1	4.0	4.0	3.9	3.8	3.5	3.3
5.0	**4.0**	4.4	4.3	4.1	4.0	3.8	3.6	3.3
7.0	**6.0**	4.5	4.4	4.1	4.0	3.8	3.6	3.3
9.0	**7.8**	4.6	4.4	4.1	4.0	3.8	3.6	3.3
12.0	**10.6**	4.6	4.4	4.1	4.0	3.8	3.6	3.3
15.0	**13.5**	4.6	4.4	4.1	4.0	3.8	3.6	3.3

■ MODEL : AS∗A14GACH

Outdoor Temperature		Indoor temperature						
		16°CDB	18°CDB	20°CDB	21°CDB	22°CDB	24°CDB	26°CDB
(°CDB)	(°CWB)	TC	TC	TC	TC	TC	TC	TC
-19.3	**-20.0**	2.6	2.6	2.6	2.6	2.6	2.6	2.6
-15.0	**-16.0**	3.0	3.0	3.0	3.0	3.0	3.0	3.0
-12.0	**-13.0**	3.3	3.3	3.3	3.3	3.3	3.3	3.3
-9.0	**-10.0**	3.7	3.7	3.6	3.6	3.6	3.6	3.6
-7.0	**-8.0**	3.9	3.9	3.9	3.9	3.8	3.8	3.8
-5.0	**-6.0**	4.1	4.1	4.1	4.1	4.1	4.0	3.9
-3.0	**-4.0**	4.4	4.3	4.3	4.3	4.3	4.3	4.0
-1.0	**-2.0**	4.6	4.6	4.5	4.5	4.5	4.3	4.0
0.0	**-1.0**	4.7	4.7	4.7	4.6	4.6	4.3	4.0
2.0	**1.0**	5.0	4.9	4.9	4.8	4.6	4.3	4.0
5.0	**4.0**	5.3	5.3	5.0	4.8	4.7	4.3	4.0
7.0	**6.0**	5.5	5.3	5.0	4.8	4.7	4.3	4.0
9.0	**7.8**	5.7	5.3	5.0	4.8	4.7	4.3	4.0
12.0	**10.6**	5.7	5.3	5.0	4.8	4.7	4.3	4.0
15.0	**13.5**	5.7	5.3	5.0	4.8	4.7	4.3	4.0

TC : Total Capacity kW.

MODEL SELECTION

HEATING CAPACITY

■ MODEL : AS∗A18GACH

Outdoor Temperature		Indoor temperature						
		16°CDB	18°CDB	20°CDB	21°CDB	22°CDB	24°CDB	26°CDB
(°CDB)	(°CWB)	TC	TC	TC	TC	TC	TC	TC
-19.3	**-20.0**	3.3	3.3	3.3	3.3	3.2	3.2	3.2
-15.0	**-16.0**	3.8	3.8	3.8	3.8	3.8	3.7	3.7
-12.0	**-13.0**	4.2	4.2	4.2	4.2	4.2	4.1	4.1
-9.0	**-10.0**	4.6	4.6	4.6	4.6	4.6	4.5	4.5
-7.0	**-8.0**	4.9	4.9	4.9	4.9	4.8	4.8	4.8
-5.0	**-6.0**	5.2	5.2	5.2	5.1	5.1	5.1	5.0
-3.0	**-4.0**	5.5	5.5	5.4	5.4	5.4	5.4	5.0
-1.0	**-2.0**	5.8	5.8	5.7	5.7	5.7	5.4	5.0
0.0	**-1.0**	5.9	5.9	5.9	5.8	5.8	5.4	5.0
2.0	**1.0**	6.2	6.2	6.2	6.0	5.8	5.4	5.0
5.0	**4.0**	6.7	6.7	6.3	6.1	5.9	5.5	5.0
7.0	**6.0**	7.0	6.7	6.3	6.1	5.9	5.5	5.0
9.0	**7.8**	7.1	6.7	6.3	6.1	5.9	5.5	5.0
12.0	**10.6**	7.1	6.7	6.3	6.1	5.9	5.5	5.0
15.0	**13.5**	7.1	6.7	6.3	6.1	5.9	5.5	5.0

■ MODEL : AS∗A24GACH

Outdoor Temperature		Indoor temperature						
		16°CDB	18°CDB	20°CDB	21°CDB	22°CDB	24°CDB	26°CDB
(°CDB)	(°CWB)	TC	TC	TC	TC	TC	TC	TC
-19.3	**-20.0**	4.2	4.1	4.1	4.1	4.1	4.1	4.1
-15.0	**-16.0**	4.8	4.8	4.8	4.8	4.8	4.7	4.7
-12.0	**-13.0**	5.4	5.3	5.3	5.3	5.3	5.3	5.2
-9.0	**-10.0**	5.9	5.9	5.8	5.8	5.8	5.8	5.7
-7.0	**-8.0**	6.2	6.2	6.2	6.2	6.1	6.1	6.1
-5.0	**-6.0**	6.6	6.6	6.6	6.5	6.5	6.5	6.3
-3.0	**-4.0**	7.0	6.9	6.9	6.9	6.9	6.8	6.3
-1.0	**-2.0**	7.4	7.3	7.3	7.2	7.2	6.9	6.3
0.0	**-1.0**	7.5	7.5	7.4	7.4	7.4	6.9	6.3
2.0	**1.0**	7.9	7.9	7.8	7.7	7.4	6.9	6.3
5.0	**4.0**	8.5	8.5	8.0	7.7	7.5	6.9	6.4
7.0	**6.0**	8.9	8.5	8.0	7.7	7.5	6.9	6.4
9.0	**7.8**	9.1	8.5	8.0	7.7	7.5	6.9	6.4
12.0	**10.6**	9.1	8.5	8.0	7.7	7.5	6.9	6.4
15.0	**13.5**	9.1	8.5	8.0	7.7	7.5	6.9	6.4

■ MODEL : AS∗A30GACH

Outdoor Temperature		Indoor temperature						
		16°CDB	18°CDB	20°CDB	21°CDB	22°CDB	24°CDB	26°CDB
(°CDB)	(°CWB)	TC	TC	TC	TC	TC	TC	TC
-19.3	**-20.0**	4.7	4.7	4.7	4.7	4.6	4.6	4.6
-15.0	**-16.0**	5.4	5.4	5.4	5.4	5.4	5.3	5.3
-12.0	**-13.0**	6.0	6.0	6.0	5.9	5.9	5.9	5.9
-9.0	**-10.0**	6.6	6.6	6.5	6.5	6.5	6.5	6.5
-7.0	**-8.0**	7.0	7.0	6.9	6.9	6.9	6.9	6.9
-5.0	**-6.0**	7.4	7.4	7.4	7.3	7.3	7.3	7.1
-3.0	**-4.0**	7.9	7.8	7.8	7.7	7.7	7.7	7.1
-1.0	**-2.0**	8.3	8.2	8.2	8.1	8.1	7.7	7.1
0.0	**-1.0**	8.5	8.4	8.4	8.3	8.3	7.7	7.1
2.0	**1.0**	8.9	8.9	8.8	8.6	8.3	7.7	7.1
5.0	**4.0**	9.6	9.5	9.0	8.7	8.4	7.8	7.2
7.0	**6.0**	10.0	9.6	9.0	8.7	8.4	7.8	7.2
9.0	**7.8**	10.2	9.6	9.0	8.7	8.4	7.8	7.2
12.0	**10.6**	10.2	9.6	9.0	8.7	8.4	7.8	7.2
15.0	**13.5**	10.2	9.6	9.0	8.7	8.4	7.8	7.2

TC : Total Capacity kW.

Refrigerant R410A
INVERTER

AIRSTAGE™ J-II
Variable Refrigerant Flow System

3. OUTDOOR UNITS

DTV_J2E015E_04--CHAPTER03
2013.01.28

CONTENTS

3. OUTDOOR UNITS

1. SPECIFICATIONS ..... 03 - 01

2. DIMENSIONS ..... 03 - 02

3. INSTALLATION SPACE ..... 03 - 03

3-1. SINGLE OUTDOOR UNIT INSTALLATION ..... 03 - 03

3-2. MULTIPLE OUTDOOR UNIT INSTALLATION ..... 03 - 04

3-3. OUTDOOR UNITS INSTALLATION IN MULTI ROW ..... 03 - 04

4. REFRIGERANT CIRCUIT ..... 03 - 05

5. WIRING DIAGRAM ..... 03 - 07

6. OPERATION RANGE ..... 03 - 08

7. NOISE LEVEL CURVE ..... 03 - 09

8. ELECTRIC CHARACTERISTICS ..... 03 - 12

9. SAFETY DEVICES ..... 03 - 13

1. SPECIFICATIONS

Nominal system capacity			HP	4	5	6
Model name				AJ*A40LALH	AJ*A45LALH	AJ*A54LALH
Power source				1 Phase ~ 230V, 50Hz		
Available voltage range				198 to 264V		
Capacity	Cooling		kW	12.1	14.0	15.5
	Heating			13.6	16.0	18.0
Input power	Cooling		kW	3.25	3.89	4.49
	Heating			3.17	3.81	4.56
Current	Cooling		A	14.27	17.08	21.69
	Heating			13.92	16.73	20.03
EER	Cooling		W / W	3.72	3.60	3.45
COP	Heating			4.29	4.20	3.95
Fan	Type x Quantity			Propeller fan x 2		
	Airflow rate	High	m^3 / h (l / s)	6,200 (1,722)	6,400 (1,778)	6,900 (1,916)
	Motor	Type x Quantity		DC motor × 2		
		Output	W	100 X 2		
Sound pressure level	Cooling		dB(A)	50	51	53
	Heating			52	53	55
Heat exchanger	Length		mm	935		
	Fin pitch			1.45		
	Rows x Stages			3 x 62		
	Face area		m^2	1.22		
	Pipe type (Material)			Grooved H-pin (Copper)		
	Fin	Type (Material)		Corrugate (Aluminium)		
		Surface treatment		Corrosion resistance (Blue fin)		
Compressor	Type x Quantity			Rotary(inv) x 1		
	Motor output		kW	3.75		
	Crankcase heater		W	25		
Refrigerant	Type			R410A		
	Charge		kg	4.8	5.3	
Refrigerant oil	Type			POE		
Enclosure	Material			Painted galvanized steel		
	Colour			Beige (10YR 7.5/1.0NN)		
Dimensions (H x W x D)	Net		mm	1334×970×370		
	Gross			1476×1064×478		
Weight	Net		kg	117		
	Gross			128		
Connection pipe	Pipe diameter	Liquid	mm	9.52		
		Gas		15.88		19.05
	Method	Liquid		Flare		
		Gas		Flare		Brazing
	Max. length		m	120		
	Max. height difference			30 / 30 (Outdoor unit : Upper / Lower)		
Operation temperature range	Cooling		°CDB	-5 to 46		
	Heating			-20 to 21		
Defrost method				Reversed cycle		
Compressor capacity control (Steps / Range)				81 steps / 20-100%		
Connectable indoor units			Number	7	8	9

Note : Specifications are based on the following conditions.

Cooling : Indoor temperature of 27°CDB / 19°CWB, and outdoor temperature of 35°CDB / 24°CWB.

Heating : Indoor temperature of 20°CDB / (15°CWB), and outdoor temperature of 7°CDB / 6°CWB.

Pipe length : 7.5 m; Height difference between outdoor unit and indoor unit : 0 m.

The protective function might work when using it outside the operation range.

2. DIMENSIONS

■ MODELS : AJ∗A40LALH, AJ∗A45LALH, AJ∗A54LALH

(Unit : mm)

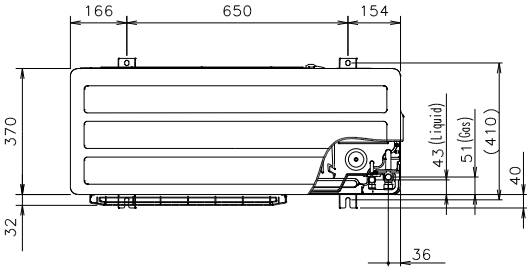

Top view

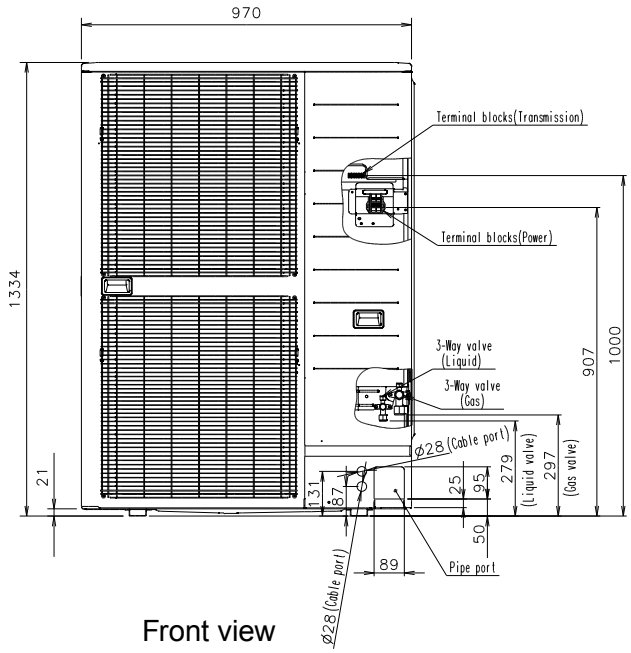

Front view

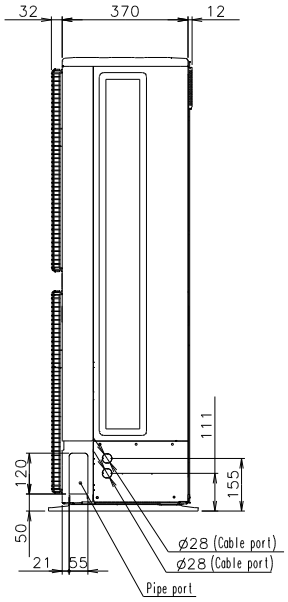

Side view

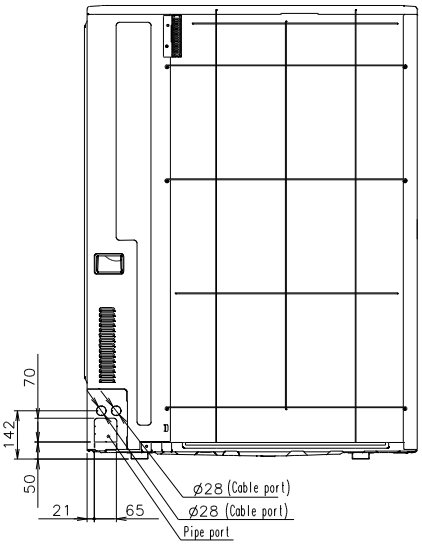

Rear view

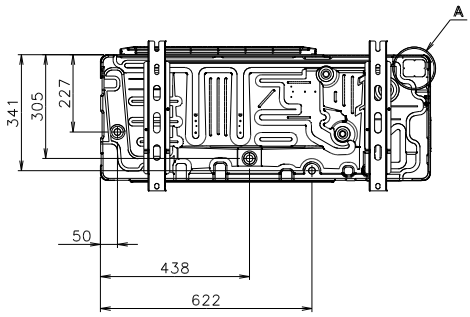

Bottom view

Detail A

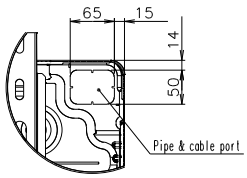

3. INSTALLATION SPACE

⚠Caution

- The installation space shown in the following examples is based on an ambient temperature under cooling operation of 35 °C DB at the air intake of the outdoor unit.
  Provide more space around the air intake than shown in the examples if the ambient temperature exceeds 35 °C DB or if the thermal load of all of the outdoor units exceeds the capacity.
- Consider the transportation route, installation space, maintenance space, and access, and install the unit in a location with sufficient space for the refrigerant piping.
- Observe the installation space specifications that are shown in the figures.
  Provide the same space for the air intake at the rear of the outdoor unit.
  If the installation is not performed according to the specifications, it could cause a short circuit and result in a lack of operating performance.
  As a result, the outdoor unit might easily be stopped by high-pressure protection.

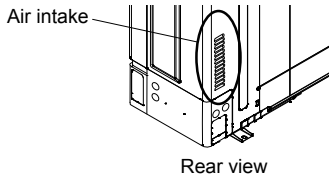

- Installation methods not shown in the following examples are not recommended.
  Performance may drop significantly.

OUTDOOR UNITS

3-1. SINGLE OUTDOOR UNIT INSTALLATION

■ WHEN THE UPWARD AREA IS OPEN

Unit : mm

● Obstacles at rear only

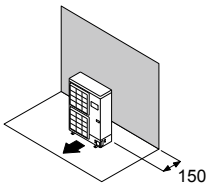

● Obstacles at rear and sides only

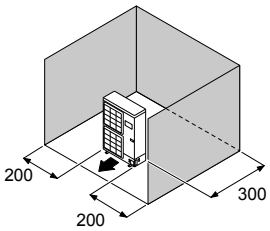

● Obstacles at front only

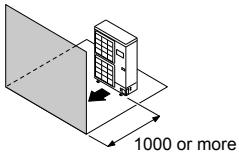

● Obstacles at front and rear only

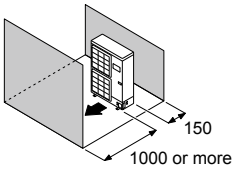

■ WHEN AN OBSTRUCTION IS PRESENT ALSO IN THE UPWARD AREA

● Obstacles at rear and above only

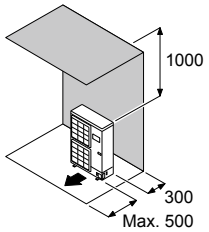

● Obstacles at rear, sides, and above only

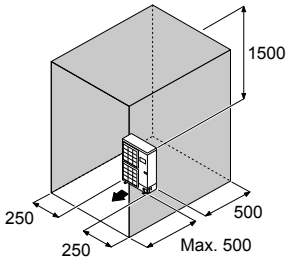

3-2. MULTIPLE OUTDOOR UNIT INSTALLATION

- Provide at least 25mm of space between the outdoor units if multiple units are installed.
- When routing the piping from the side of an outdoor unit, provide space for the piping.
- No more than 3 units must be installed side by side.
  When 3 units or more are arranged in a line, provide the space as shown in the following example when an obstruction is present also in the upward area.

■ WHEN THE UPWARD AREA IS OPEN

● Obstacles at rear only

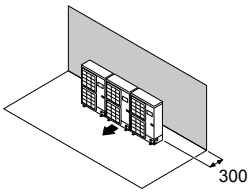

●Obstacles at front only

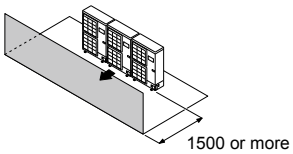

●Obstacles at front and rear only

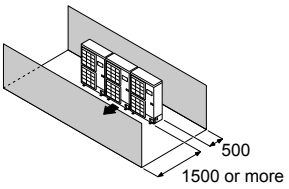

■ WHEN AN OBSTRUCTION IS PRESENT ALSO IN THE UPWARD AREA

● Obstacles at rear and above only

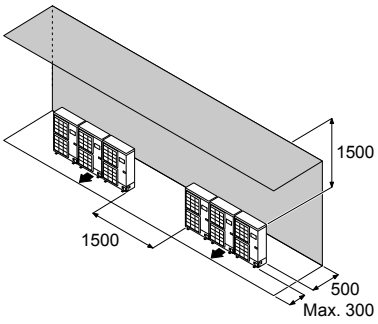

3-3. OUTDOOR UNITS INSTALLATION IN MULTI ROW

- The following settings are not recommended in case of cooling by a low outside temperature.

● Single parallel unit arrangement

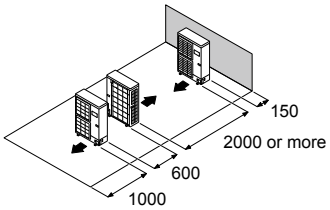

● Multiple parallel unit arrangement

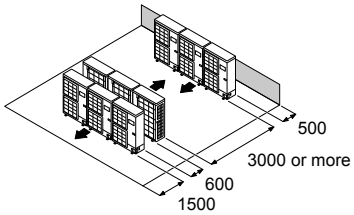

4. REFRIGERANT CIRCUIT

■ MODELS : AJ∗A40LALH, AJ∗A45LALH, AJ∗A54LALH

OUTDOOR UNITS

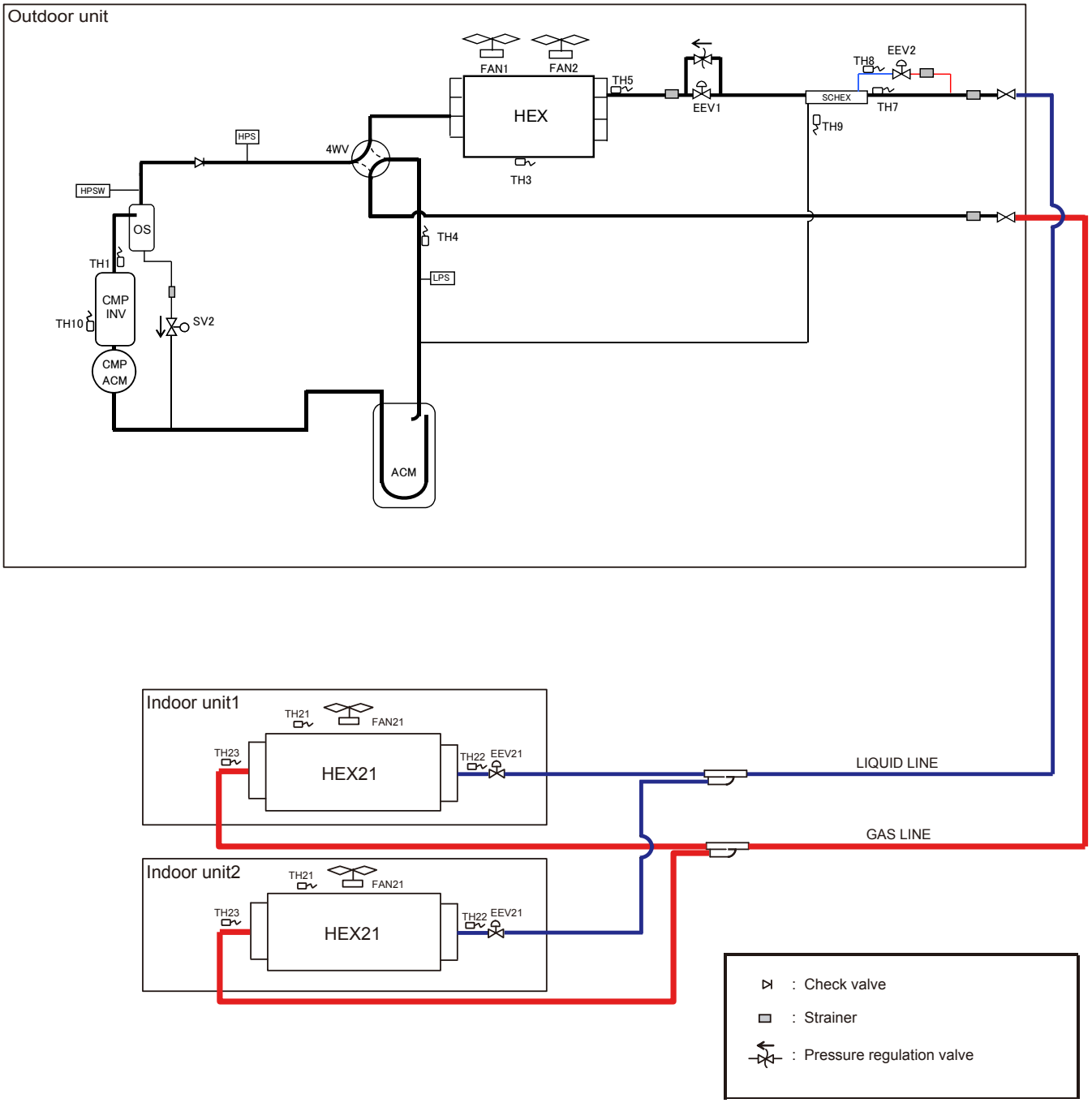

■ SYMBOL DESCRIPTION

● Outdoor unit

MARK	DESCRIPTION	Marking (Tube)
CMP	Compressor (Inverter type)	
HEX	Heat exchanger	
FAN 1	Fan 1	
FAN 2	Fan 2	
ACM	Accumulator	
OS	Oil separator	
SCHEX	Sub-cool heat exchanger	
HPS	High pressure sensor	
LPS	Low pressure sensor	
HPSW	High pressure sensor switch	
4WV	4-way valve	
EEV 1	Electric expansion valve 1	
EEV 2	Electric expansion valve 2	
SV 2	Solenoid valve	
TH 1	Discharge temperature thermistor	Blue
TH 3	Outdoor temperature thermistor	–
TH 4	Suction temperature thermistor	Red
TH 5	Heat exchanger (outlet) thermistor	Pink
TH 7	Liquid temperature thermistor	Green
TH 8	Sub-cool heat exchanger (inlet) thermistor	White
TH 9	Sub-cool heat exchanger (outlet) thermistor	Brown
TH 10	Compressor temperature thermistor	–

● Indoor unit

MARK	DESCRIPTION
HEX 21	Heat exchanger
FAN 21	Fan
EEV 21	Electric expansion valve
TH 21	Room temperature thermistor
TH 22	Heat exchanger (inlet) thermistor
TH 23	Heat exchanger (outlet) thermistor

5. WIRING DIAGRAM

■ MODELS : AJ∗A40LALH, AJ∗A45LALH, AJ∗A54LALH

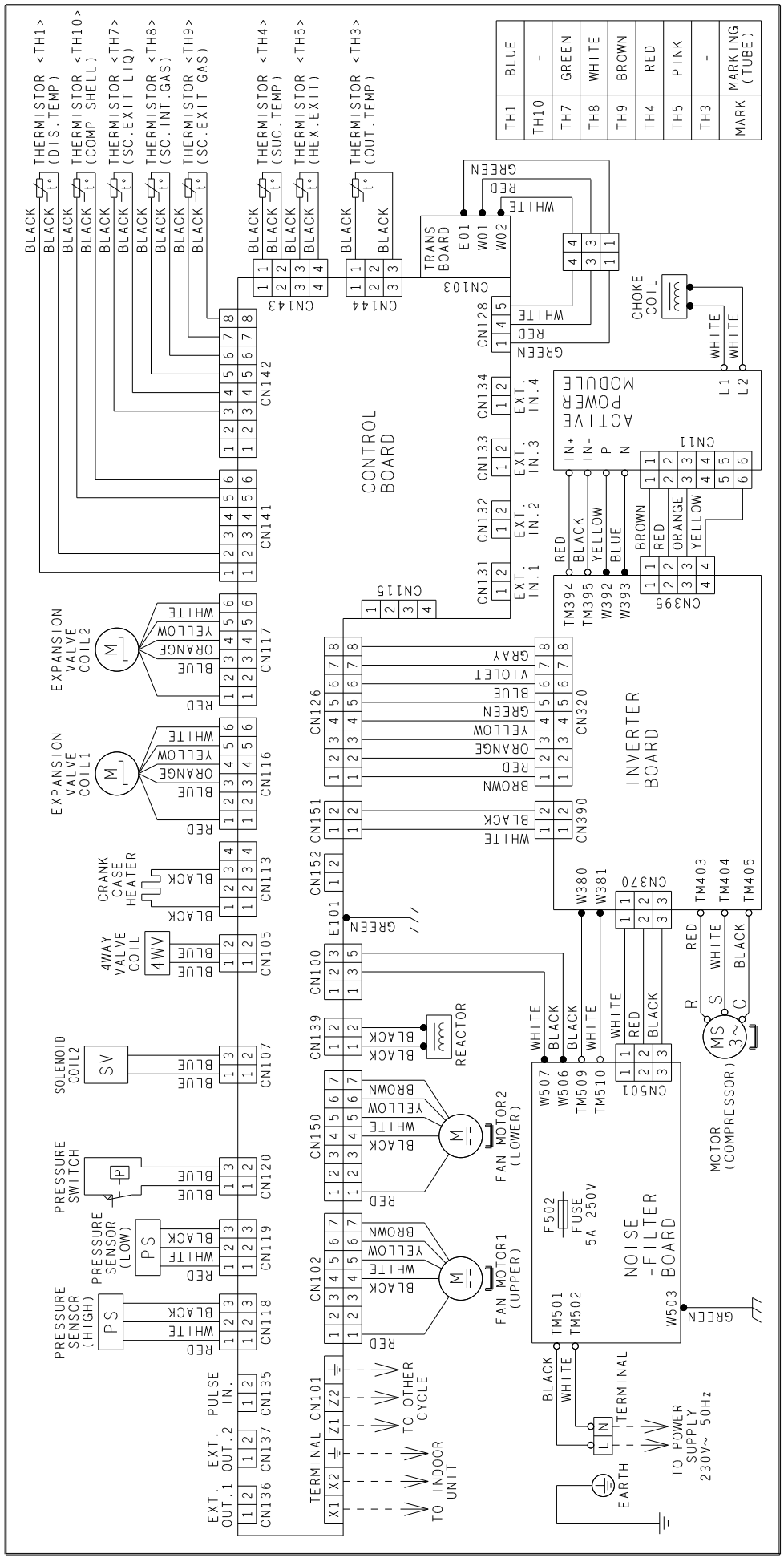

OUTDOOR UNITS

6. OPERATION RANGE

Operation mode	Operation range	
	Indoor unit	Outdoor unit
Cooling / Dry	18 to 32°C DB R.H. 80% or less	-5 to 46°C DB
Heating	10 to 30°C DB	-20 to 21°C DB

R.H. : Relative Humidity.

OUTDOOR UNITS

7. NOISE LEVEL CURVE

■ MODEL : AJ∗A40LALH

● Cooling

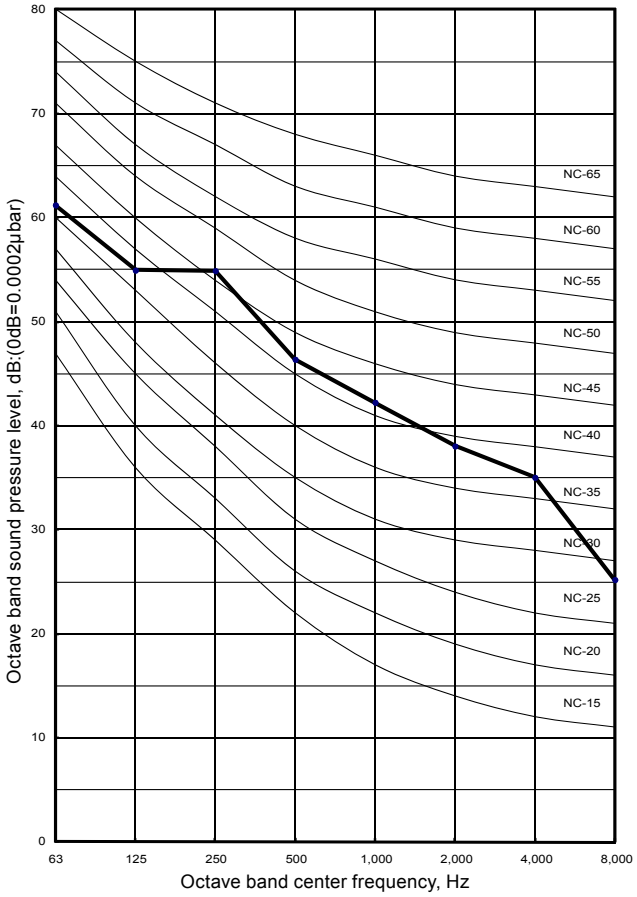

● Heating

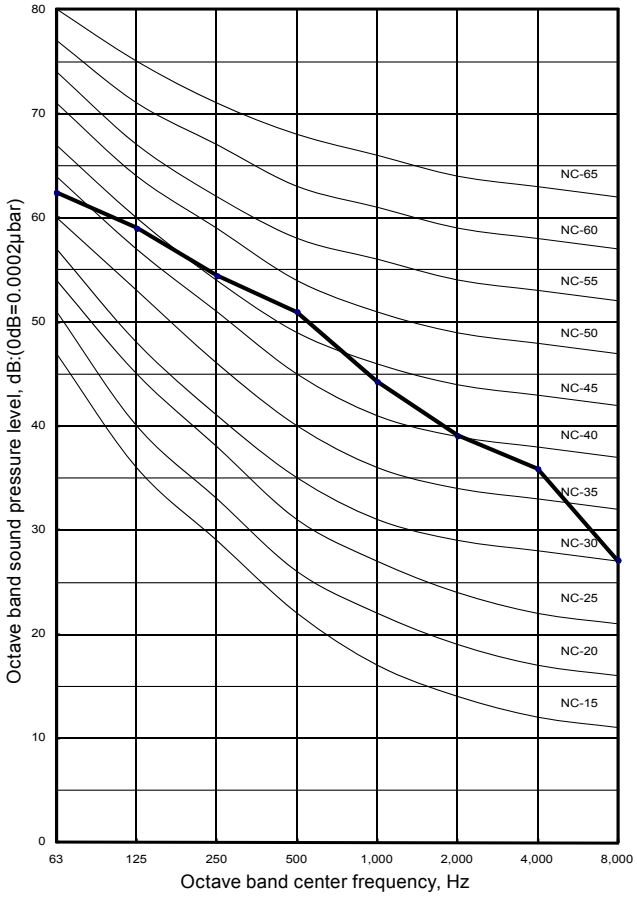

■ MODEL : AJ∗A45LALH

● Cooling

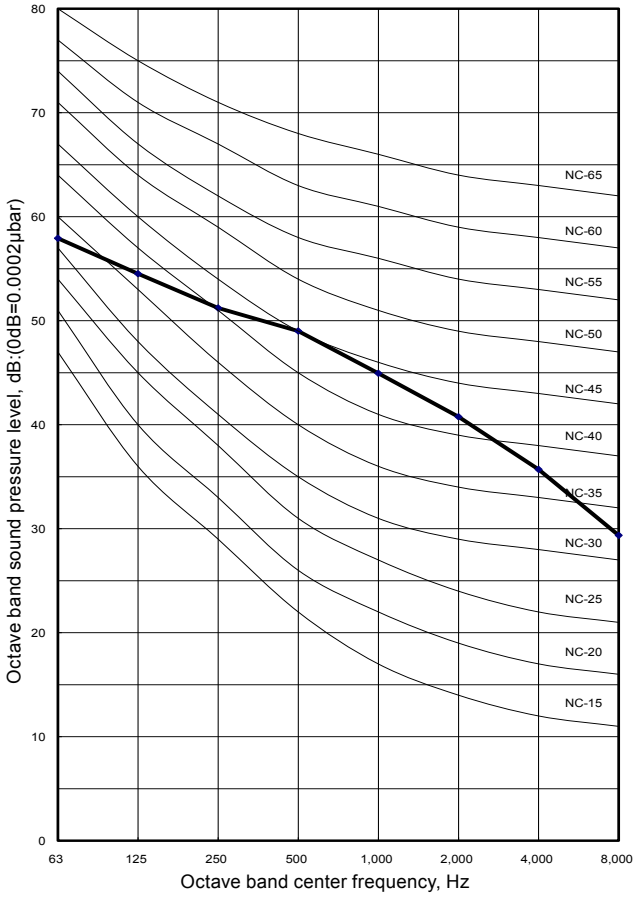

● Heating

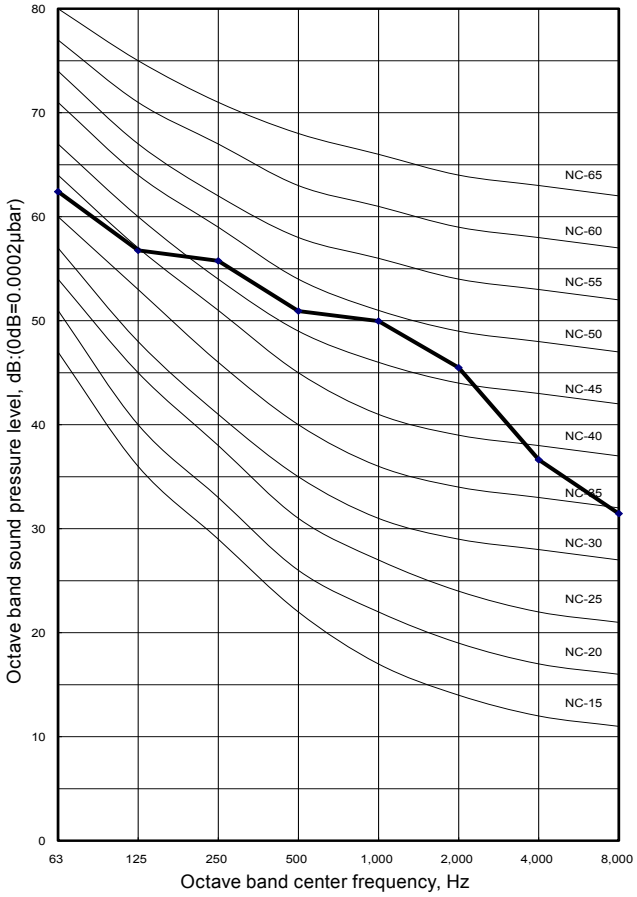

■ MODEL : AJ∗A54LALH

● Cooling

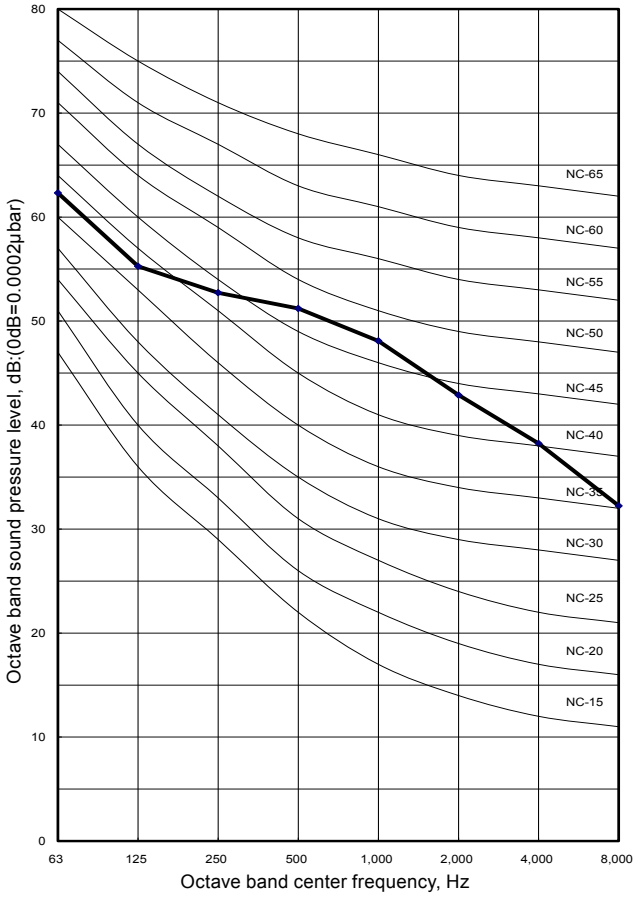

● Heating

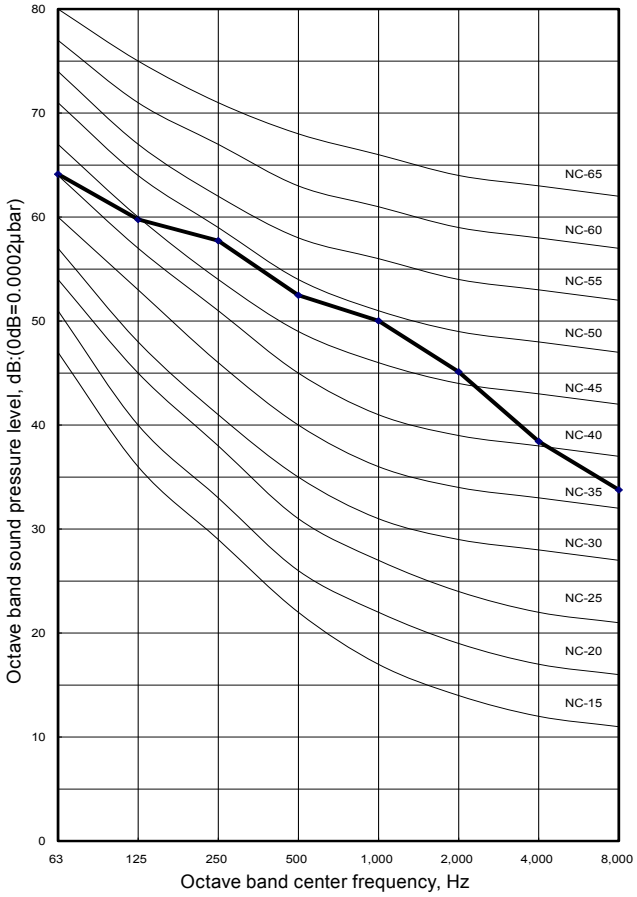

OUTDOOR UNITS

■ SOUND LEVEL CHECK POINT

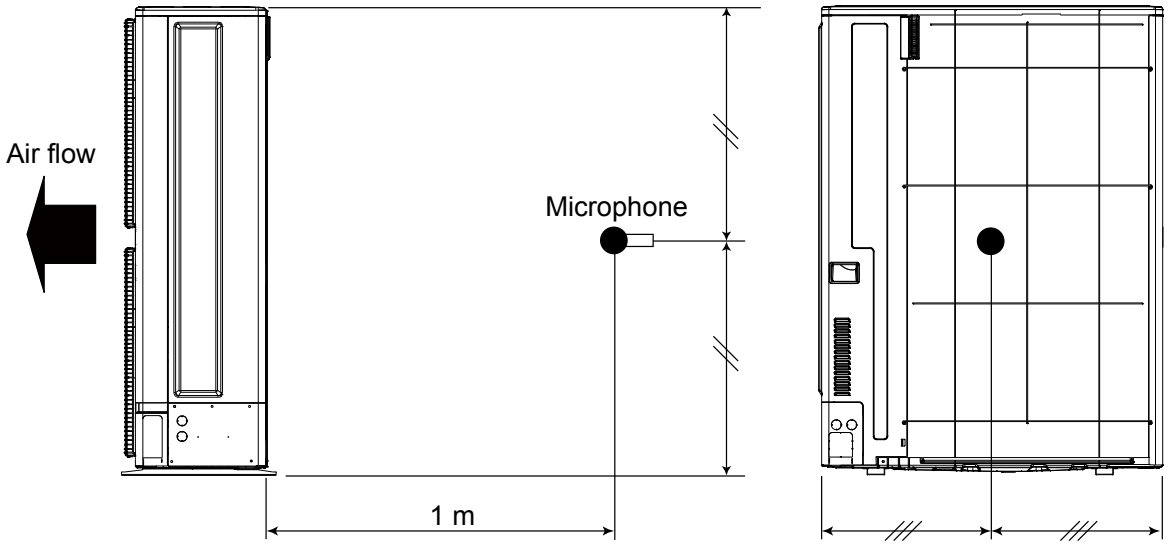

OUTDOOR UNITS

8. ELECTRIC CHARACTERISTICS

		Rated Value		Electric Characteristics									
		Power Supply		Full Load Characteristics			Wiring Specifications *1				Compresser	Outdoor Fan Motor	
HP	Model name	Hz	Voltage (V)	MCA (A)	TOCA (A)	MSC (A)	MFA (A)	Power Cable (mm^2)	Earth Cable (mm^2)	Limited Wiring Length (m) *2	RLA (A)	Output (W)	FLA (A)
4	AJ∗A40LALH	50	230	30.3	29.5	29.5	32	6	4	18	24	100	0.66
5	AJ∗A45LALH	50	230	30.3	29.5	29.5	32	6	4	18	24	100	0.66
6	AJ∗A54LALH	50	230	30.3	29.5	29.5	32	6	4	18	24	100	0.66

OUTDOOR UNITS

- Select the breaker based on MCA of the table above.
- Select the wire diameter based on the larger value of MCA or TOCA of the table above and select a wire diameter which withstands the breaker capacity.

*1 Wiring Spec : These values are recommended data. Please select the wiring spec in accordance with the regional cable standard.

*2 Limited Wiring Length : This wiring length is in case voltage drop less than 2%. When wiring length extend longer, select the wiring size of larger diameter.

RLA : Rated Load Amp of compressor under the standard condition.

MCA : Min Circuit Amp = Max Operating Current (Full Load)

MSC : Max Starting Current

TOCA : Total Value of Each Over Current Set

MFA : Main Fuse (Circuit Breaker) Current

9. SAFETY DEVICES

Safety device	AJ∗A40LALH	AJ∗A45LALH	AJ∗A54LALH
Fuse (Filter PCB)	AC 250V 5A		
Protector (Filter PCB)	AC 500V 45A		
Compressor Protector	Overcurrent protection - Temperature protection Off : 110°C On : 80°C		
High Pressure Protection	Off : 4.2MPa On : 3.2MPa		
Low Pressure Protection	Off : 0.05MPa		

OUTDOOR UNITS

Refrigerant R410A INVERTER

AIRSTAGE™
Variable Refrigerant Flow System

4. INDOOR UNITS

DTV_VR2E018E_03--CHAPTER04
2013.04.01

CONTENTS

4. INDOOR UNITS

1. FEATURES ..... 04 - 01
- 1-1. COMPACT CASSETTE TYPE ..... 04 - 01
- 1-2. CASSETTE TYPE ..... 04 - 02
- 1-3. LOW STATIC PRESSURE DUCT / CONCEALED FLOOR TYPE ..... 04 - 03
- 1-4. SLIM DUCT / SLIM CONCEALED FLOOR TYPE ..... 04 - 04
- 1-5. MEDIUM STATIC PRESSURE DUCT TYPE ..... 04 - 05
- 1-6. HIGH STATIC PRESSURE DUCT TYPE ..... 04 - 06
- 1-7. FLOOR / CEILING TYPE ..... 04 - 07
- 1-8. CEILING TYPE ..... 04 - 08
- 1-9. WALL MOUNTED TYPE ..... 04 - 09
- 1-10. WALL MOUNTED TYPE ..... 04 - 10

2. SPECIFICATIONS ..... 04 - 11
- 2-1. COMPACT CASSETTE TYPE ..... 04 - 11
- 2-2. CASSETTE TYPE ..... 04 - 13
- 2-3. LOW STATIC PRESSURE DUCT / CONCEALED FLOOR TYPE ..... 04 - 15
- 2-4. SLIM DUCT / SLIM CONCEALED FLOOR TYPE ..... 04 - 16
- 2-5. MEDIUM STATIC PRESSURE DUCT TYPE ..... 04 - 18
- 2-6. HIGH STATIC PRESSURE DUCT TYPE ..... 04 - 19
- 2-7. FLOOR / CEILING TYPE ..... 04 - 20
- 2-8. CEILING TYPE ..... 04 - 21
- 2-9. WALL MOUNTED TYPE ..... 04 - 22
- 2-10. WALL MOUNTED TYPE (EEV external model) ..... 04 - 23
- 2-11. WALL MOUNTED TYPE ..... 04 - 24

3. ELECTRIC CHARACTERISTICS ..... 04 - 25

CONTENTS

4. INDOOR UNITS

4. DIMENSIONS ..... 04 - 26
4-1. COMPACT CASSETTE TYPE ..... 04 - 26
4-2. CASSETTE TYPE ..... 04 - 28
4-3. LOW STATIC PRESSURE DUCT / CONCEALED FLOOR TYPE ..... 04 - 31
4-4. SLIM DUCT / SLIM CONCEALED FLOOR TYPE ..... 04 - 35
4-5. MEDIUM STATIC PRESSURE DUCT TYPE ..... 04 - 40
4-6. HIGH STATIC PRESSURE DUCT TYPE ..... 04 - 42
4-7. FLOOR / CEILING TYPE ..... 04 - 46
4-8. CEILING TYPE ..... 04 - 48
4-9. WALL MOUNTED TYPE ..... 04 - 50
4-10. WALL MOUNTED TYPE (EEV external model) ..... 04 - 50
4-11. WALL MOUNTED TYPE ..... 04 - 52

5. WIRING DIAGRAMS ..... 04 - 54
5-1. COMPACT CASSETTE TYPE ..... 04 - 54
5-2. CASSETTE TYPE ..... 04 - 55
5-3. LOW STATIC PRESSURE DUCT / CONCEALED FLOOR TYPE ..... 04 - 56
5-4. SLIM DUCT / SLIM CONCEALED FLOOR TYPE ..... 04 - 57
5-5. MEDIUM STATIC PRESSURE DUCT TYPE ..... 04 - 58
5-6. HIGH STATIC PRESSURE DUCT TYPE ..... 04 - 59
5-7. FLOOR / CEILING TYPE ..... 04 - 60
5-8. CEILING TYPE ..... 04 - 61
5-9. WALL MOUNTED TYPE ..... 04 - 62
5-10. WALL MOUNTED TYPE (EEV external model) ..... 04 - 63
5-11. WALL MOUNTED TYPE ..... 04 - 64

6. AIR VELOCITY AND TEMPERATURE DISTRIBUTIONS ..... 04 - 65
6-1. COMPACT CASSETTE TYPE ..... 04 - 65
6-2. CASSETTE TYPE ..... 04 - 79
6-3. SLIM DUCT TYPE with Auto louver grille kit ..... 04 - 91
6-4. FLOOR / CEILING TYPE ..... 04 - 105
6-5. CEILING TYPE ..... 04 - 111
6-6. WALL MOUNTED TYPE ..... 04 - 115
6-7. WALL MOUNTED TYPE (EEV external model) ..... 04 - 120
6-8. WALL MOUNTED TYPE ..... 04 - 125

CONTENTS

4. INDOOR UNITS

7. FAN PERFORMANCE CURVE ..... 04 - 128
- 7-1. LOW STATIC PRESSURE DUCT / CONCEALED FLOOR TYPE ..... 04 - 128
- 7-2. SLIM DUCT / SLIM CONCEALED FLOOR TYPE ..... 04 - 133
- 7-3. MEDIUM STATIC PRESSURE DUCT TYPE ..... 04 - 147
- 7-4. HIGH STATIC PRESSURE DUCT TYPE ..... 04 - 155
- 7-5. CEILING TYPE (FRESH AIR) ..... 04 - 160
- 7-6. CASSETTE TYPE (FRESH AIR) ..... 04 - 161

8. AIRFLOW ..... 04 - 162

9. NOISE LEVEL CURVE ..... 04 - 164
- 9-1. COMPACT CASSETTE TYPE ..... 04 - 164
- 9-2. CASSETTE TYPE ..... 04 - 166
- 9-3. LOW STATIC PRESSURE DUCT / CONCEALED FLOOR TYPE ..... 04 - 168
- 9-4. SLIM DUCT / SLIM CONCEALED FLOOR TYPE ..... 04 - 170
- 9-5. MEDIUM STATIC PRESSURE DUCT TYPE ..... 04 - 172
- 9-6. HIGH STATIC PRESSURE DUCT TYPE ..... 04 - 173
- 9-7. FLOOR / CEILING TYPE ..... 04 - 175
- 9-8. CEILING TYPE ..... 04 - 176
- 9-9. WALL MOUNTED TYPE ..... 04 - 177
- 9-10. WALL MOUNTED TYPE (EEV external model) ..... 04 - 179
- 9-11. WALL MOUNTED TYPE ..... 04 - 181

10. SAFETY DEVICES ..... 04 - 183

1. FEATURES

1-1. COMPACT CASSETTE TYPE

■ MODELS : AUXB04GALH, AUXB07GALH, AUXB09GALH, AUXB12GALH, AUXB14GALH, AUXB18GALH, AUXB24GALH



■ FEATURES

● 2-stage turbo fan

High efficiency design by 2 stage structure

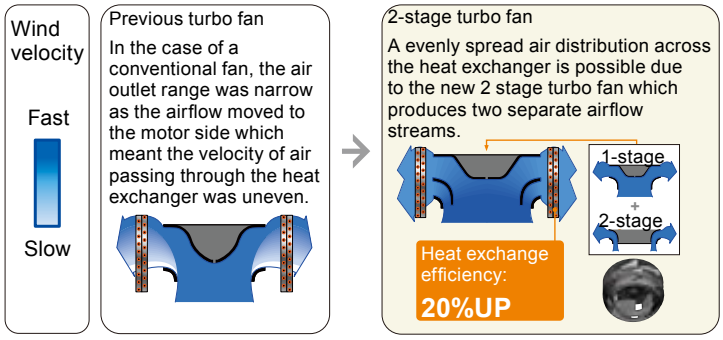

● Quiet quality

Optimization of wing form (laminar wing type) and wing number (7 blades each)

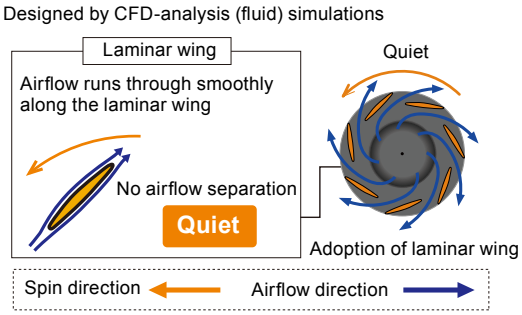

● Easy maintenance

①Maintenance of fan motor and fan

Maintenance of the fan motor and fan can be done easily after taking off the panel as the bell mouth of the fan can be removed easily.

A : Fan motor B : 2-stage turbo fan

C : Bell-mouth D : Panel

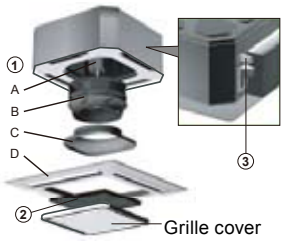

②Long life filter

: standard equipment

③Adaptation of transparent drainage parts

During installation, maintenance and operation, the drain pump and kit can be checked easily.

● Compact design

Worlds first 24,000Btu model in the compact cassette category

(Easy installation by taking off ceiling panel of 600 x 600 size)

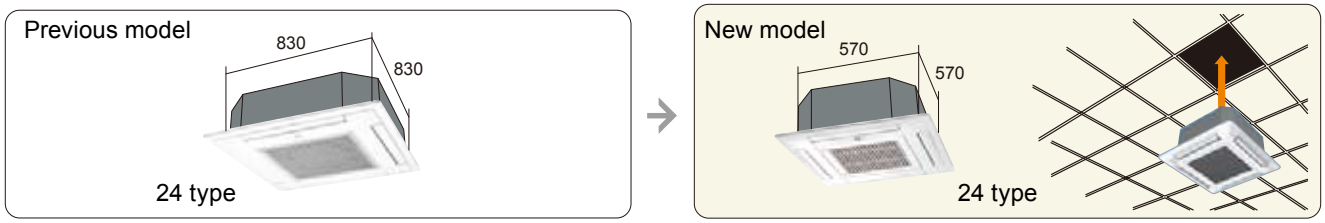

● High lift drain pump

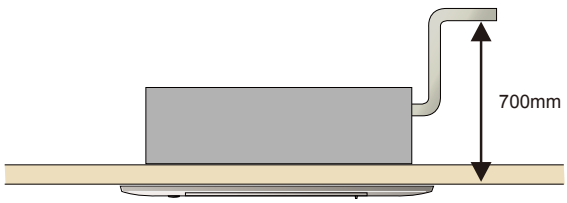

INDOOR UNITS

1-2. CASSETTE TYPE

■ MODELS : AUXD18GALH, AUXD24GALH, AUXA30GALH, AUXA36GALH, AUXA45GALH, AUXA54GALH



■ FEATURES

● High efficiency turbo fan with 3-dimensional blade

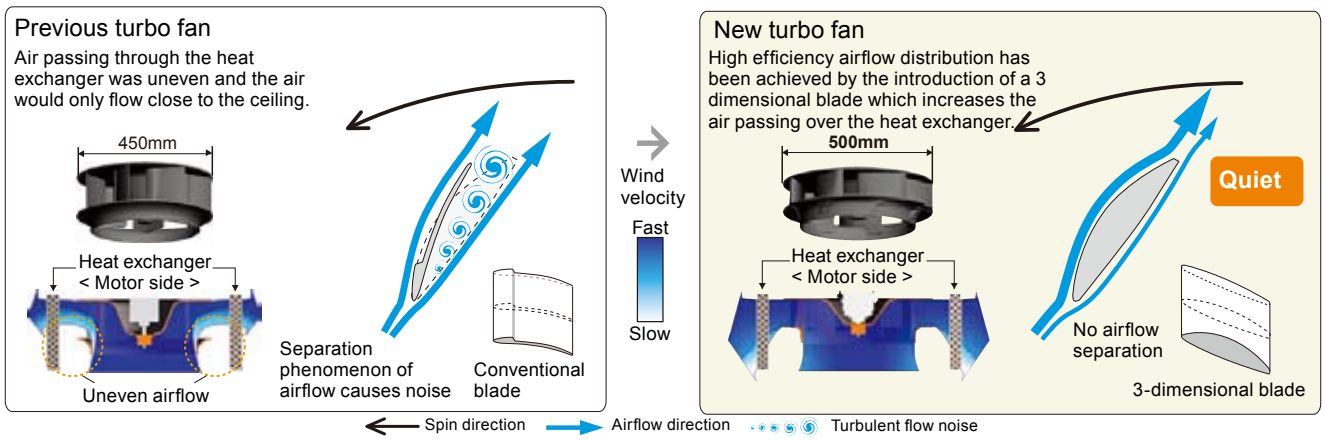

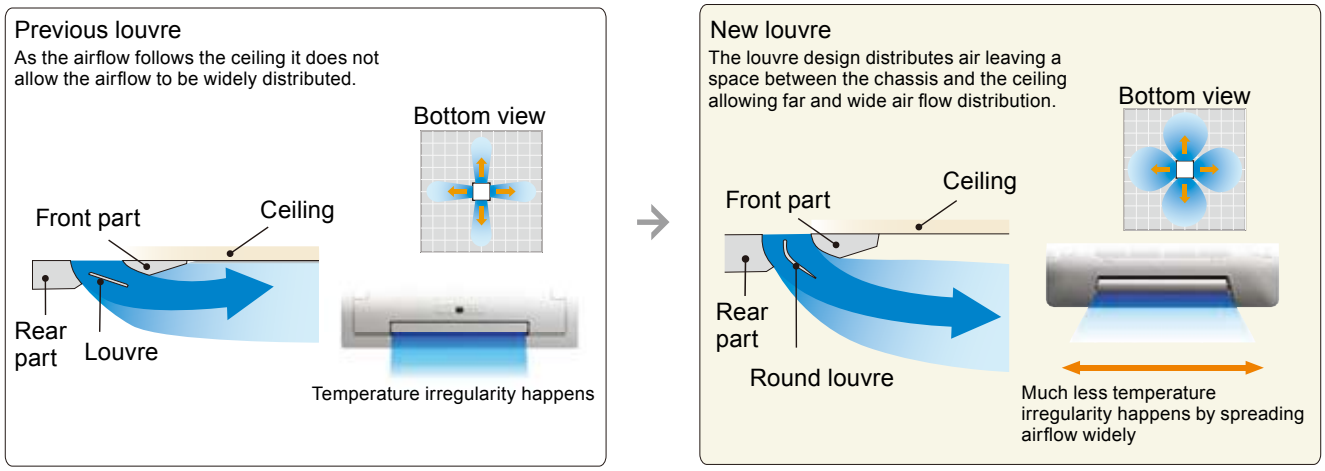

● Adjustment of hanger position is possible after installation

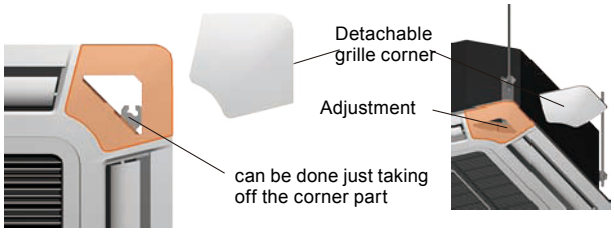

● One way aperture installation

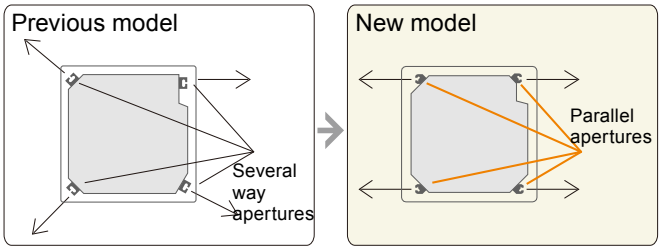

● High lift drain pump

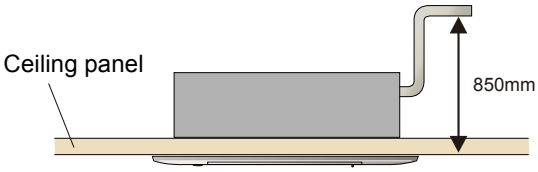

INDOOR UNITS

1-3. LOW STATIC PRESSURE DUCT / CONCEALED FLOOR TYPE

■ MODELS : ARXB07GALH, ARXB09GALH, ARXB12GALH, ARXB14GALH, ARXB18GALH

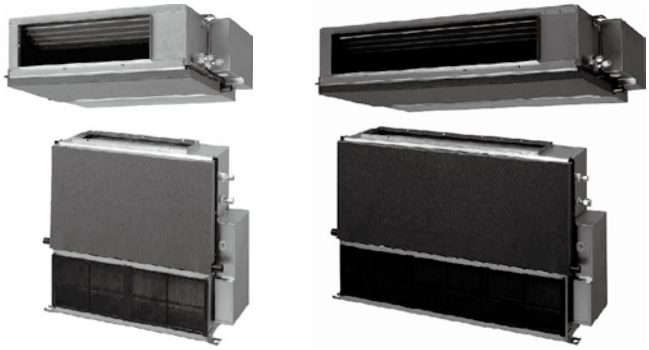

Small and compact indoor unit suitable for many applications.

■ FEATURES

● Low noise level

A low noise level has been achieved for each capacity.

Model		7	9	12	14	18
Static pressure (Normal / Max.)	Pa	25 / 50				
Noise level (Low speed)	dB(A)	24	27	25	30	30

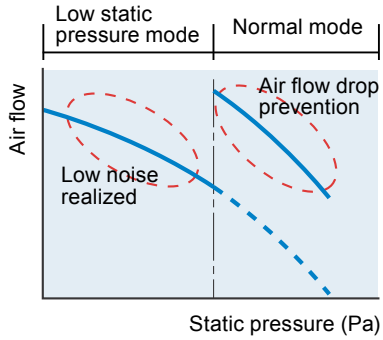

● Compact design

Ultra-slim duct air conditioner for easy installation.

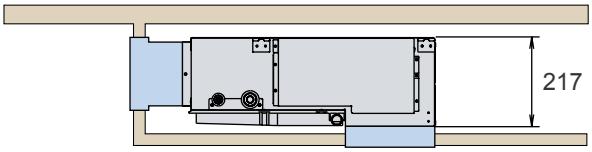

Slim size (217mm) allows installation even where the space behind the ceiling is narrow.

● Two-direction drain piping

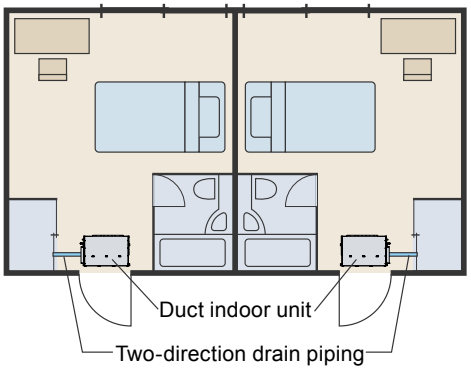

● Air - intake

Air intake direction can be selected to match the installation site.

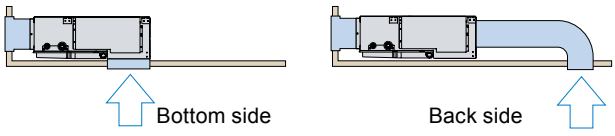

● Flexible installation

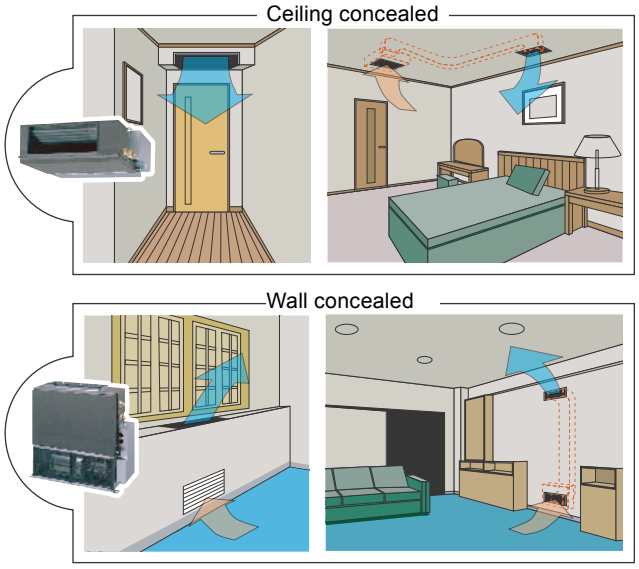

● Filter (Accessory)

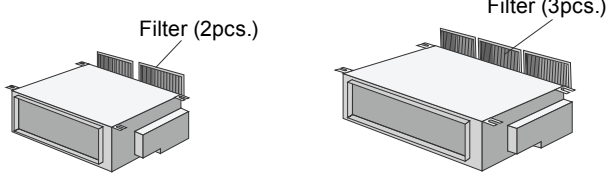

1-4. SLIM DUCT / SLIM CONCEALED FLOOR TYPE

■ MODELS : ARXD04GALH, ARXD07GALH, ARXD09GALH, ARXD12GALH, ARXD14GALH, ARXD18GALH, ARXD24GALH





Slim design and wide range of static pressure for flexible installation.

■ FEATURES

● Slim design

The slim design allows installations where ceilings are narrow.

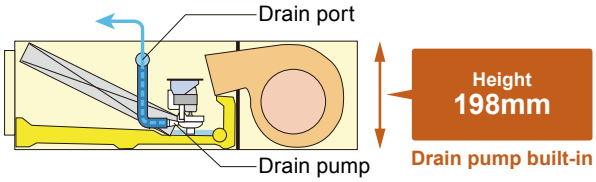

● High lift drain pump

Condensate lift-up to 850mm

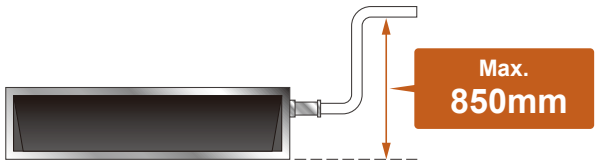

Drain hose is standard accessory

● Selectable with a wide range of static pressure

By using DC fan motor, it is possible to change static pressure range 0 to 90*Pa. The change of static pressure range is possible by function setting with wired / wireless remote controller.

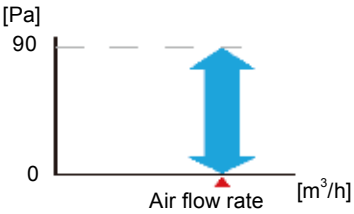

*24 model is 0 to 50Pa

● Flexible installation

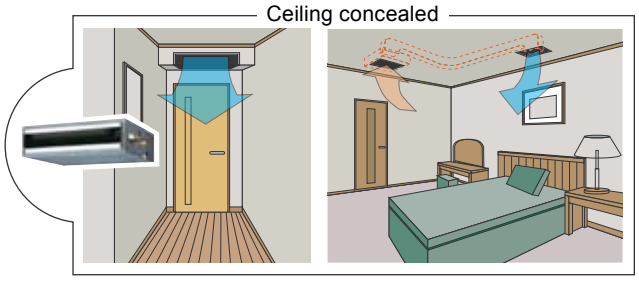

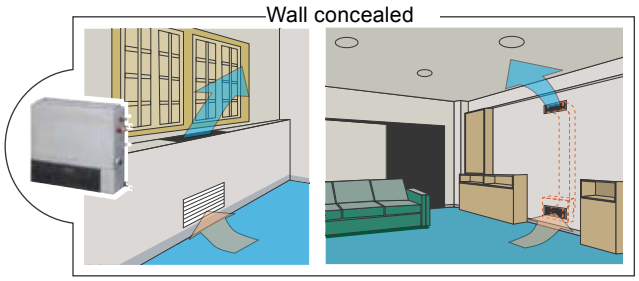

● Filter (Accessory)

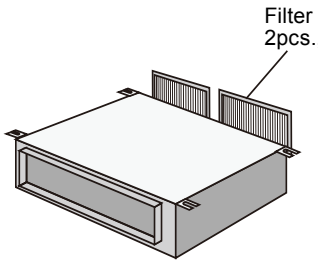

● Air - intake

Air intake direction can be selected to match the installation site.

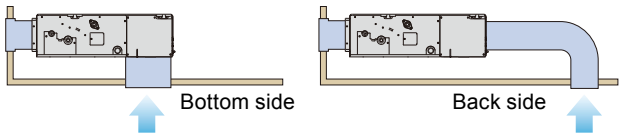

1-5. MEDIUM STATIC PRESSURE DUCT TYPE

■ MODELS : ARXA24GBLH, ARXA30GBLH, ARXA36GBLH, ARXA45GBLH

Slim compact design allows for easy installation in narrow ceiling spaces up to 270mm.



■ FEATURES

● Slim & Compact design

In the case of bottom return air connection, not only does the indoor unit design allow for installation in a narrow ceiling space of up to 270mm, further space savings have been achieved by mounting the control box internally inside the chassis.

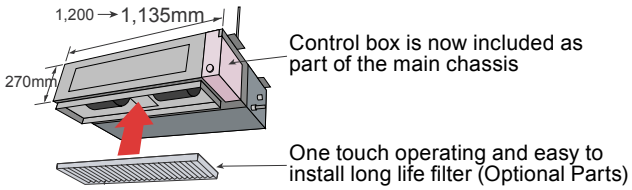

● Low energy consumption by high efficiency DC fan motor

Improved motor efficiency from previous model.



● Easy maintenance

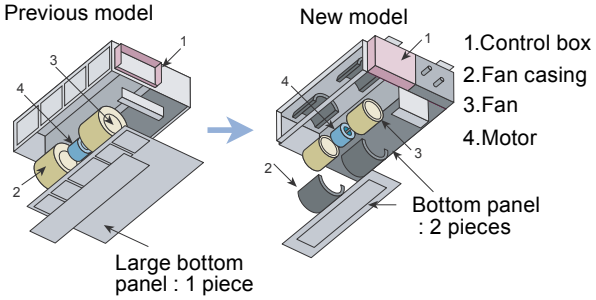

● Selectable with a wide range of static pressure

By using DC fan motor, it is possible to change static pressure range from 0 to 150Pa. The change of static pressure range is possible by function setting with wired / wireless remote controller.

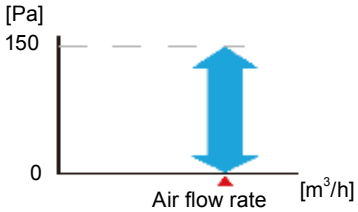

Structural improvement is attained by making the bottom panel two pieces, front and rear. The internal fan casing is also manufactured in two pieces, namely upper and lower. The maintenance of the motor and fan can be easily carried out by removing the rear panel and the lower part of the casing while leaving the main chassis installed.

● Two-direction drain piping

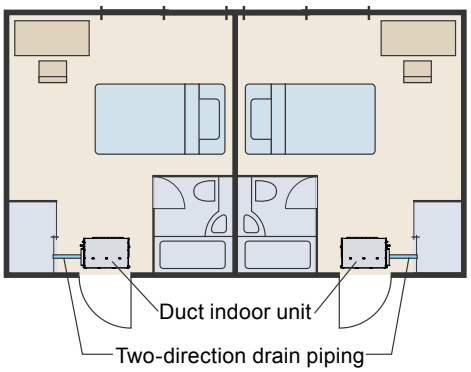

● Installation styles

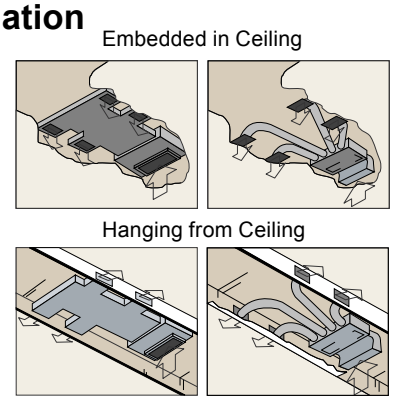

1-6. HIGH STATIC PRESSURE DUCT TYPE

■ MODELS : ARXC36GATH, ARXC45GATH, ARXC60GATH, ARXC72GATH, ARXC90GATH

These indoor units allow for high airflow quantities.



■ FEATURES

● Easy installation (Compact size & Lightweight)

Model : ARXC36
A compact size and lightweight indoor unit has been developed by reducing the basic chassis and the overall material weight.

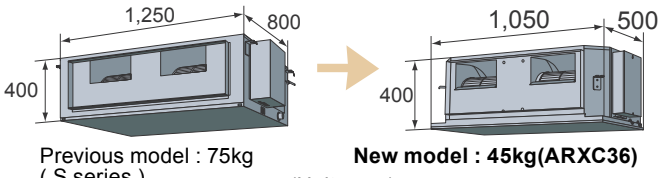

Previous model : 75kg
(S series)

New model : 45kg(ARXC36)

(Unit : mm)

Volume 47.5% do wn

Weight 40% do wn

● Static pressure selection : ARXC72/ARXC90

Model : ARXC72 / ARXC90



Max. 300Pa

2 types of static pressure mode are selectable.

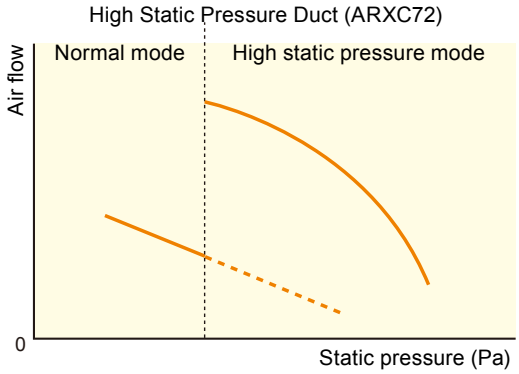

The adoption of a single phase fan motor allows 3 steps fan speed control

● Low noise

Models : ARXC36 / ARXC45 / ARXC60

Conventional model

New model (ARXC36)

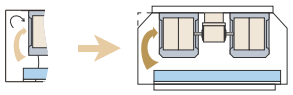

Cutting off the corners of the conventional indoor unit front panel and fan casing, has enabled less turbulent air flow. Low noise is realized by adopting a plastic case and a plastic fan.

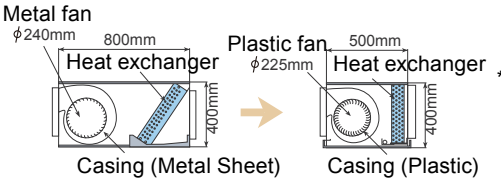

Casing (Metal Sheet)

Previous model :
(S series)
Metal fan [53.1dB(A)]

Casing (Plastic)

New model :
Plastic fan [45dB(A)]
(ARXC36)

*Model : Material (At 100Pa : Actual noise measurement value)

Note: ARXC60, ARXC72, and ARXC90 are not connectable with J-II Series.

INDOOR UNITS

1-7. FLOOR / CEILING TYPE

■ MODELS : AB∗A12GATH, AB∗A14GATH, AB∗A18GATH, AB∗A24GATH

The slim and lightweight design allows the unit to be suspended from the ceiling or installed on the floor. This type suits many room designs.





■ FEATURES

● Flexible installation

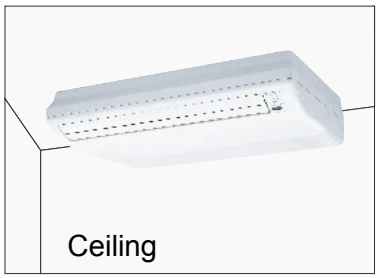

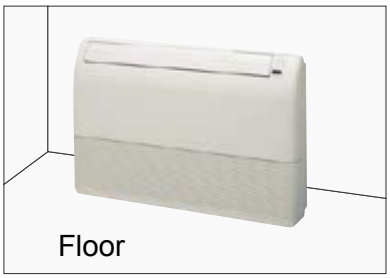

● Double auto swing

A combination of up / down and right / left directional swing allows three-dimensional air direction control.

Right and Left SWING

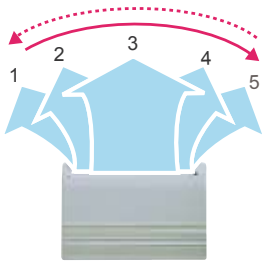

5 step selectable

Up and Down SWING

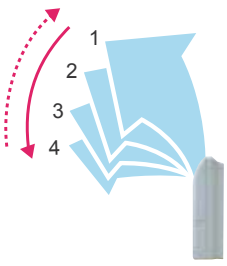

4 step selectable

● High power DC fan motor

- High power
- Wide rotatition range
- High efficiency



● Super vane

Double Louvre Super vane with newly developed special configuration boosts airflow sending cool air quickly to every corner of the room.

● Auto-closing louvre

When operation is stopped, the louvres will automatically close. (This function is available on all non-ducted models.)

● Compact design

Symmetrical, slim and compact design.

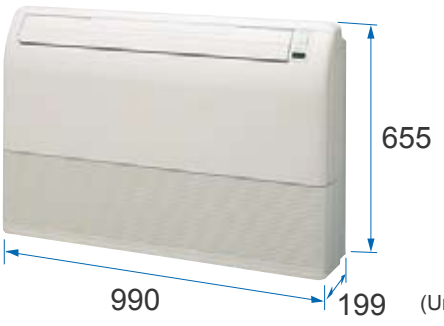

(Unit : mm)

INDOOR UNITS

1-8. CEILING TYPE

■ MODELS : AB∗A30GATH, AB∗A36GATH, AB∗A45GATH, AB∗A54GATH

Easily concealed in any installation.



■ FEATURES

● Installation

Open

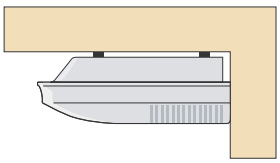

General installation pattern which suspends the indoor unit from the ceiling.

Concealed

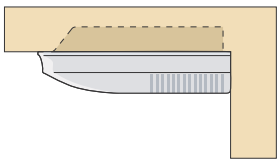

Installation pattern where part of the indoor unit is embedded into the ceiling.

Wall mounted

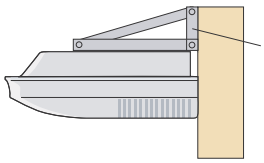

Installation which fixes the indoor unit to the wall by the use of wall brackets (Field supplied). This type of installation can be used when the ceiling space is insufficient.

INDOOR UNITS

INDOOR UNITS

● Double auto swing and wide airflow

Auto airflow direction and auto swing.

Right and Left

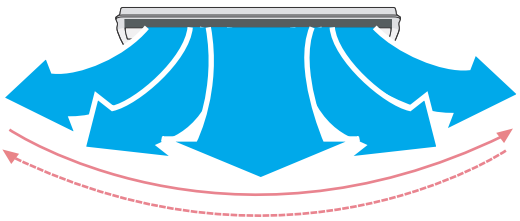

5 step selectable

Up and Down

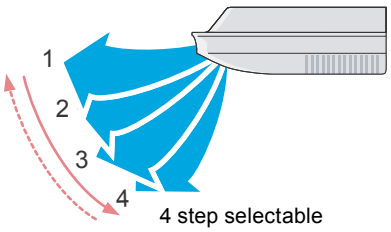

4 step selectable

● Long airflow

Long airflow ensures comfort to every corner of a large room.

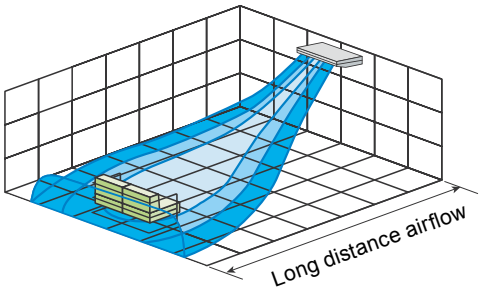

● Slim & Compact design



● High lift Drain pump

Optional drain pump unit allows flexible installation design.

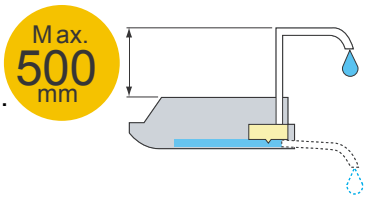

● Fresh air intake

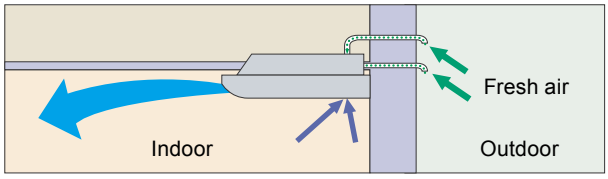

● High power DC fan motor

- High power
- Wide rotatition range
- High efficiency



● Long-life filter

High efficiency long-life filter doubles the life of the filter compared to standard filters.

1-9. WALL MOUNTED TYPE

■ MODELS : AS∗A04GACH, AS∗A07GACH, AS∗A09GACH, AS∗A12GACH, AS∗A14GACH

■ MODELS : AS∗E04GACH, AS∗E07GACH, AS∗E09GACH, AS∗E12GACH, AS∗E14GACH (EEV external model)

Compact and Stylish design indoor



■ FEATURES

● Filter features



High quality air conditioning by incorporation of high performance filter.

Apple-catechin filter
Fine dust, invisible mold spores, and harmful microorganisms are absorbed onto the filter by static electricity, and further growth is inhibited and deactivated by the polyphenol ingredient extracted from apples.



Long-life* Ion deodorization filter
The filter deodorizes by powerfully decomposing absorbed odors using the oxidizing and reducing effects of ions generated by the ultra-fine particle ceramic.



*The filter can be used for approximately 3 years if it is washed under water to restore its surface action when it is dirty.

Deodorizing effect (Odor reduction rate)

Ammonia

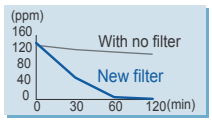

Trimethylamine

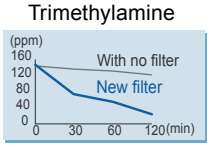

Hydrogen sulfate

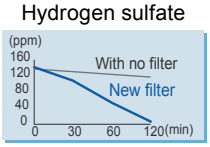

Testing organization : Environmental Sanitary Inspection Center Test method : Deodorization Test

● Compact size

Powerful output even in a compact design

Though the indoor unit is compact, it features a large, high pressure cross fan (90mm diameter) in a centre mounted configuration and a Lambda type heat exchanger to provide plenty of power.

Width 790 mm

● Symmetrical design

Symmetrical, clean design that suits all interiors.



● New style high power DC fan motor

- High power
- Wide rotatition range
- High efficiency
- Compact size



● Auto swing louvre

The Auto Swing Louvre function ensures that the air direction corresponds to the mode selected.

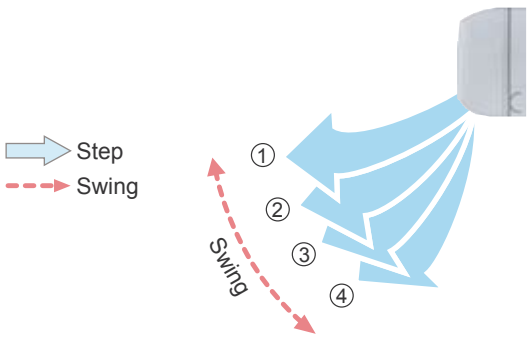

● Easy maintenance

Easy maintenance has been realized as the front panel can be removed for easy access.

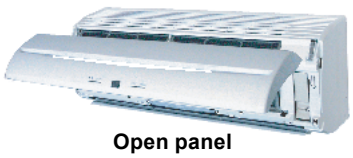

Open panel

● Wired control compatible

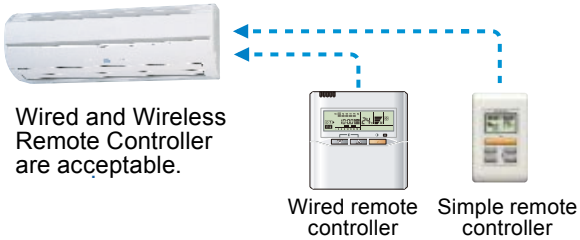

Wired and Wireless Remote Controller are acceptable.

Wired remote controller

Simple remote controller

INDOOR UNITS

1-10. WALL MOUNTED TYPE

■ MODELS : AS∗A18GACH, AS∗A24GACH, AS∗A30GACH

Simple & Elegant Appearance Design

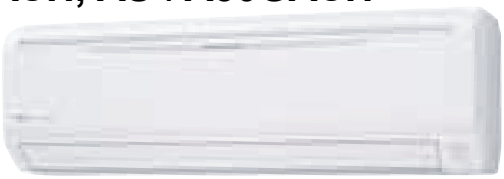

■ FEATURES

● Compact & Slim design

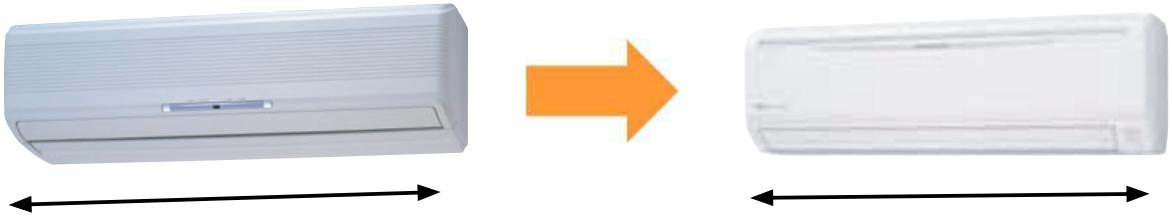

● " Vertical airflow" provides powerful floor level heating

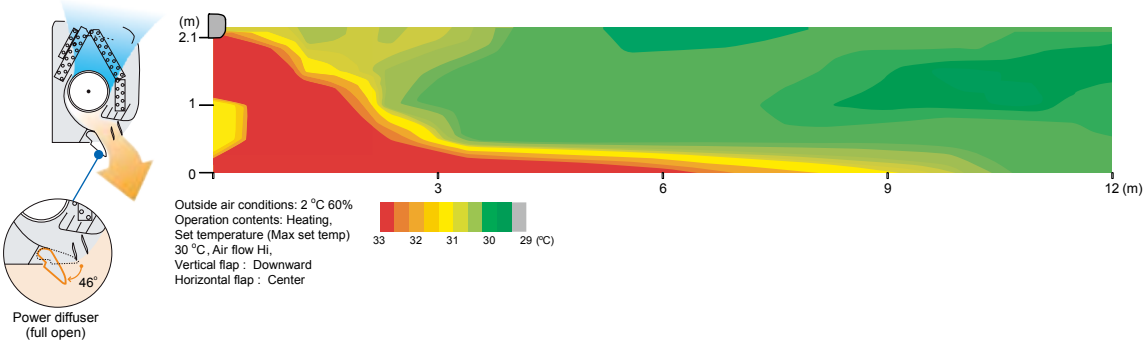

● " Horizontal airflow" does not blow cool air directly at the occupants in the room

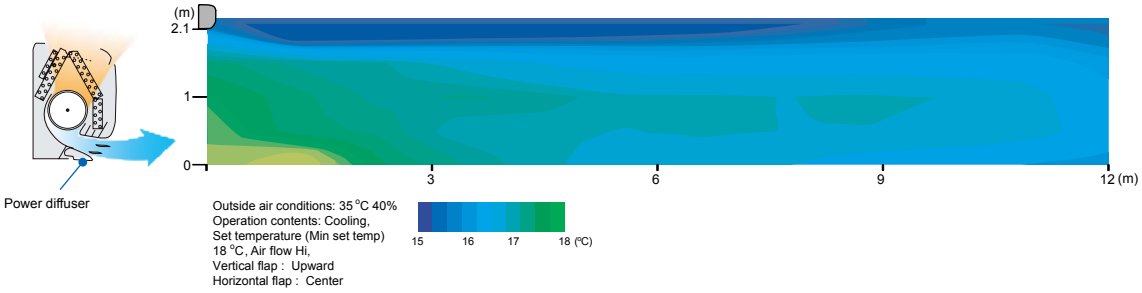

● Air conditioner filter features

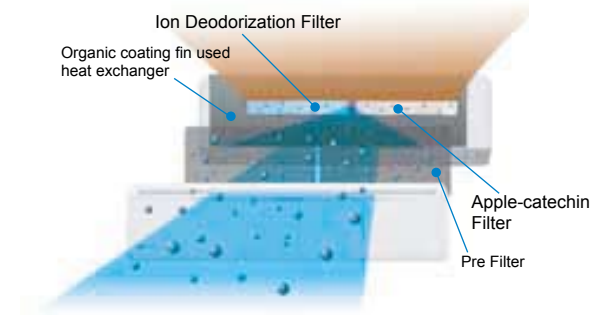

Antibacterial deodorizing pre-filter with special ceramic powder

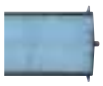

Long-life* Ion Deodorization Filter

The filter deodorizes by powerfully decomposing absorbed odors using the oxidizing and reducing effects of ions generated by the ultra-fine-particle ceramic.

(*The filter can be used for approx. 3 years if it is washed under water to restore its surface action when it is dirty.)

\+ Using different filters at both sides



Apple-catechin Filter

Fine dust, invisible mold spores, and harmful microorganisms are absorbed onto the filter by static electricity, and further growth is inhibited and deactivated by the polyphenol extracted from apples.

● Easy maintenance

Simplification of drain pan cleaning improves maintenance-ability.

2. SPECIFICATIONS

2-1. COMPACT CASSETTE TYPE

Model name				AUXB04GALH	AUXB07GALH	AUXB09GALH	AUXB12GALH	AUXB14GALH
Power source				230V ~ 50Hz				
Available voltage range				198 to 264 V				
Capacity	Cooling		kW	1.1	2.2	2.8	3.6	4.5
	Heating			1.3	2.8	3.2	4.1	5.0
Input power			W	23	25	25	29	35
Fan	Airflow rate	High	m^3 / h (l / s)	530 (147)	540 (150)	550 (153)	600 (167)	680 (189)
		Med		450 / 420*1 (125 / 117)	450 (125)	450 (125)	530 (147)	590 (164)
		Low		350 / 300*1 (97 / 83)	350 (97)	350 (97)	390 (108)	390 (108)
	Type x Quantity			Turbo × 1				
	Motor output		W	54				
Sound pressure level	High		dB(A)	34	34	35	37	38
	Med			30 / 28*1	30	30	34	34
	Low			25 / 21*1	25	25	27	27
Heat exchanger	Length		mm	1,280				
	Fin pitch			1.20				
	Rows x Stages			2 × 10				
	Face Area		m^2	0.27				
	Pipe type (Material)			Grooved H-pin (Copper)				
	Fin	Type (Material)		Slit(Aluminium)				
		Surface treatment		Hydrophilic coating				
Air filter	Type			Anti-mold				
	Net material			PP honeycomb				
Enclosure	Material			galvanized sheet iron				
	Colour			-				
Dimensions (H x W x D)	Net	Main body	mm	245 × 570 × 570				
	Gross			265 × 730 × 625				
Weight	Net		kg	15				
	Gross			18			19	
Connection pipe diameter	Liquid (Flare)		mm	ø 6.35				
	Gas (Flare)			ø 12.70				
	Drain hose			VP25 [ø 25(I.D.) ; ø 32(O.D.)]				
Cassette grille	Model name			UTG-UFYC-W(FUJITSU brand); UTG-UFGC-W(GENERAL brand)				
	Colour			WHITE Approximate colour of MUNSELL N9.25/				
	Dimensions (H x W x D)	Net	mm	50 × 700 × 700				
		Gross		120 × 765 × 755				
	Weight	Net	kg	2.6				
		Gross		4.5				

*1: This value is "cooling operation / heating operation".

Note : Specifications are based on the following conditions.
Cooling : Indoor temperature of 27°CDB / 19°CWB, and outdoor temperature of 35°CDB / 24°CWB.
Heating : Indoor temperature of 20°CDB / (15°CWB), and outdoor temperature of 7°CDB / 6°CWB.
Pipe length : 7.5 m; Height difference between outdoor unit and indoor unit : 0 m.

INDOOR UNITS

Model name				AUXB18GALH	AUXB24GALH
Power source				230V ~ 50Hz	
Available voltage range				198 to 264 V	
Capacity	Cooling		kW	5.6	7.1
	Heating			6.3	8.0
Input power			W	36	84
Fan	Airflow rate	High	m^3 / h (l / s)	710 (197)	1,030 (286)
		Med		580 (161)	830 (231)
		Low		400 (111)	450 (125)
	Type x Quantity			Turbo × 1	
	Motor output		W	54	
Sound pressure level	High		dB(A)	41	50
	Med			35	44
	Low			27	30
Heat exchanger	Length		mm	1,295	
	Fin pitch			1.30	
	Rows x Stages			3 × 10	
	Face Area		m^2	0.28	
	Pipe type (Material)			Grooved H-pin (Copper)	
	Fin	Type (Material)		Slit(Aluminium)	
		Surface treatment		Hydrophilic coating	
Air filter	Type			Anti-mold	
	Net material			PP honeycomb	
Enclosure	Material			galvanized sheet iron	
	Colour			-	
Dimensions (H x W x D)	Net	Main body	mm	245 × 570 × 570	
	Gross			265 × 730 × 625	
Weight	Net		kg	17	
	Gross			20	
Connection pipe diameter	Liquid (Flare)		mm	ø 9.52	
	Gas (Flare)			ø 15.88	
	Drain hose			VP25 [ø 25(I.D.) ; ø 32(O.D.)]	
Cassette grille	Model name			UTG-UFYC-W(FUJITSU brand); UTG-UFGC-W(GENERAL brand)	
	Colour			WHITE Approximate colour of MUNSELL N9.25/	
	Dimensions (H x W x D)	Net	mm	50 × 700 × 700	
		Gross		120 × 765 × 755	
	Weight	Net	kg	2.6	
		Gross		4.5	

Note : Specifications are based on the following conditions.
Cooling : Indoor temperature of 27°CDB / 19°CWB, and outdoor temperature of 35°CDB / 24°CWB.
Heating : Indoor temperature of 20°CDB / (15°CWB), and outdoor temperature of 7°CDB / 6°CWB.
Pipe length : 7.5 m; Height difference between outdoor unit and indoor unit : 0 m.

2-2. CASSETTE TYPE

Model name				AUXD18GALH	AUXD24GALH
Power source				230V ~, 50Hz	
Available voltage range				198 to 264 V	
Capacity	Cooling		kW	5.6	7.1
	Heating			6.3	8.0
Input power			W	39	46
Fan	Airflow rate	High	m^3 / h (l / s)	1,150 (319)	1,280 (356)
		Med		940 (261)	1,040 (289)
		Low		870 (242)	870 (242)
	Type x Quantity			Turbo × 1	
	Motor output		W	80	
Sound pressure level	High		dB(A)	36	38
	Med			30	33
	Low			29	29
Heat exchanger	Length		mm	2,054	
	Fin pitch			1.20	
	Rows x Stages			2× 10	
	Face Area		m^2	0.42	
	Pipe type (Material)			Grooved H-pin (Copper)	
	Fin	Type (Material)		Slit(Aluminium)	
		Surface treatment		Hydrophilic coating	
Air filter	Type			Anti-mold	
	Net material			PP honeycomb	
Enclosure	Material			galvanized sheet iron	
	Colour			-	
Dimensions (H x W x D)	Net	Main body	mm	246 × 840 × 840	
	Gross			318 × 960 × 980	
Weight	Net		kg	22	
	Gross			27	
Connection pipe diameter	Liquid (Flare)		mm	ø 9.52	
	Gas (Flare)			ø 15.88	
	Drain hose			VP25 [ø 25(I.D.) ; ø 32(O.D.)]	
Cassette grille	Model name			UTG-UGYA-W(FUJITSU brand); UTG-UGGA-W(GENERAL brand)	
	Colour			WHITE Approximate colour of MUNSELL N9.25/	
	Dimensions (H x W x D)	Net	mm	50 × 950 × 950	
		Gross		115 × 1,020 × 1,000	
	Weight	Net	kg	5.5	
		Gross		8.5	

Note : Specifications are based on the following conditions.
Cooling : Indoor temperature of 27°CDB / 19°CWB, and outdoor temperature of 35°CDB / 24°CWB.
Heating : Indoor temperature of 20°CDB / (15°CWB), and outdoor temperature of 7°CDB / 6°CWB.
Pipe length : 7.5 m; Height difference between outdoor unit and indoor unit : 0 m.

INDOOR UNITS

Model name				AUXA30GALH	AUXA36GALH	AUXA45GALH	AUXA54GALH
Power source				230V ~, 50Hz			
Available voltage range				198 to 264 V			
Capacity	Cooling		kW	9.0	11.2	12.5	14.0
	Heating			10.0	12.5	14.0	16.0
Input power			W	59	80	99	119
Fan	Airflow rate	High	m^3 / h (l / s)	1,600 (444)	1,800 (500)	1,900 (528)	2,000 (556)
		Med		1,300 (361)	1,300 (361)	1,370 (381)	1,370 (381)
		Low		1,100 (306)	1,100 (306)	1,100 (306)	1,100 (306)
	Type x Quantity			Turbo × 1			
	Motor output		W	80			
Sound pressure level	High		dB(A)	40	44	46	47
	Med			38	38	39	39
	Low			33	33	33	33
Heat exchanger	Length		mm	2,087			
	Fin pitch			1.30			
	Rows x Stages			3 × 12			
	Face Area		m^2	0.52			
	Pipe type (Material)			Grooved H-pin (Copper)			
	Fin	Type (Material)		Slit(Aluminium)			
		Surface treatment		Hydrophilic coating			
Air filter	Type			Anti-mold			
	Net material			PP honeycomb			
Enclosure	Material			galvanized sheet iron			
	Colour			-			
Dimensions (H x W x D)	Net	Main body	mm	288 × 840 × 840			
	Gross			360 × 960 × 980			
Weight	Net		kg	27			
	Gross			33			
Connection pipe diameter	Liquid (Flare)		mm	ø 9.52			
	Gas (Flare)			ø 15.88	ø 19.05		
	Drain hose			VP25 [ø 25(I.D.) ; ø 32(O.D.)]			
Cassette grille	Model name			UTG-UGYA-W(FUJITSU brand); UTG-UGGA-W(GENERAL brand)			
	Colour			WHITE Approximate colour of MUNSELL N9.25/			
	Dimensions (H x W x D)	Net	mm	50 × 950 × 950			
		Gross		115 × 1,020 × 1,000			
	Weight	Net	kg	5.5			
		Gross		8.5			

Note : Specifications are based on the following conditions.
Cooling : Indoor temperature of 27°CDB / 19°CWB, and outdoor temperature of 35°CDB / 24°CWB.
Heating : Indoor temperature of 20°CDB / (15°CWB), and outdoor temperature of 7°CDB / 6°CWB.
Pipe length : 7.5 m; Height difference between outdoor unit and indoor unit : 0 m.

2-3. LOW STATIC PRESSURE DUCT / CONCEALED FLOOR TYPE

Model name				ARXB07GALH	ARXB09GALH	ARXB12GALH	ARXB14GALH	ARXB18GALH
Power source				230V ~, 50Hz				
Available voltage range				198 to 264 V				
Capacity	Cooling		kW	2.2	2.8	3.6	4.5	5.6
	Heating			2.8	3.2	4.0	5.0	6.3
Input power			W	46	55	63	90	96
Static pressure range			Pa	0 to 50				
Standard static pressure			Pa	25				
Fan	Airflow rate	High	m^3 / h (l / s)	370 (103)	440 (122)	590 (164)	800 (222)	890 (247)
		Med		310 (86)	370 (103)	500 (139)	750 (208)	810 (225)
		Low		280 (78)	340 (94)	450 (125)	700 (194)	730 (203)
	Type x Quantity			Sirocco × 1		Sirocco × 2		
	Motor output		W	20	18	23	36	42
Sound pressure level	High		dB(A)	29	31	30	33	36
	Med			26	29	28	32	34
	Low			24	27	25	30	30
Heat exchanger	Length		mm	410		700		
	Fin pitch			1.30				
	Rows x Stages			2 × 14				
	Face Area		m^2	0.12		0.21		
	Pipe type (Material)			Grooved H-pin (Copper)				
	Fin	Type (Material)		Slit(Aluminium)				
		Surface treatment		Hydrophilic coating				
Air filter	Type			Anti-mold				
	Net material			PP honeycomb				
Enclosure	Material			galvanized sheet iron				
	Colour			-				
Dimensions (H x W x D)	Net		mm	217 × 663 × 595		217 × 953 × 595		
	Gross			324 × 785 × 686		324 × 1,075 × 686		
Weight	Net		kg	15		22		23
	Gross			20		27		28
Connection pipe diameter	Liquid (Flare)		mm	ø 6.35				ø 9.52
	Gas (Flare)			ø 12.70				ø 15.88
	Drain hose			VP25 [ø 25(I.D.) ; ø 32(O.D.)]				

Note : Specifications are based on the following conditions.
Cooling : Indoor temperature of 27°CDB / 19°CWB, and outdoor temperature of 35°CDB / 24°CWB.
Heating : Indoor temperature of 20°CDB / (15°CWB), and outdoor temperature of 7°CDB / 6°CWB.
Pipe length : 7.5 m; Height difference between outdoor unit and indoor unit : 0 m.

INDOOR UNITS

2-4. SLIM DUCT / SLIM CONCEALED FLOOR TYPE

Model name				ARXD04GALH	ARXD07GALH	ARXD09GALH	ARXD12GALH	ARXD14GALH
Power source				230V ~, 50Hz				
Available voltage range				198 to 264 V				
Capacity	Cooling		kW	1.1	2.2	2.8	3.6	4.5
	Heating			1.3	2.8	3.2	4.0	5.0
Input power			W	40	44	50	54	92
Static pressure range			Pa	0 to 90				
Standard static pressure			Pa	25				
Fan	Airflow rate	High	m^3 / h (l / s)	510 (142)	550 (153)	600 (167)	600 (167)	800 (222)
		Med		470 / 400 *1 (131 / 111)	490 (136)	550 (153)	510 (142)	710 (197)
		Low		440 / 320 *1 (122 / 89)	440 (122)	480 (133)	450 (125)	610 (169)
	Type x Quantity			Sirocco × 2				
	Motor output		W	80			81	
Sound pressure level	High		dB(A)	26	28	29	30	34
	Med			25 / 21 *1	25	26	27	32
	Low			22 / 20 *1	22	24	24	28
Heat exchanger	Length		mm	500				
	Fin pitch			1.30				
	Rows x Stages			2 × 14			3 × 14	
	Face Area		m^2	0.15				
	Pipe type (Material)			Grooved H-pin (Copper)				
	Fin	Type (Material)		Slit(Aluminium)				
		Surface treatment		Hydrophilic coating				
Air filter	Type			Fungicide type				
	Net material			PP honeycomb				
Enclosure	Material			galvanized sheet iron				
	Colour			-				
Dimensions (H x W x D)	Net		mm	198 × 700 × 620				
	Gross			270 × 935 × 770				
Weight	Net		kg	17			18	
	Gross			21			23	
Connection pipe diameter	Liquid (Flare)		mm	ø 6.35				
	Gas (Flare)			ø 12.70				
	Drain hose			VP25 [ø 25(I.D.) ; ø 32(O.D.)]				

*1: This value is "cooling operation / heating operation".

Note : Specifications are based on the following conditions.
Cooling : Indoor temperature of 27°CDB / 19°CWB, and outdoor temperature of 35°CDB / 24°CWB.
Heating : Indoor temperature of 20°CDB / (15°CWB), and outdoor temperature of 7°CDB / 6°CWB.
Pipe length : 7.5 m; Height difference between outdoor unit and indoor unit : 0 m.

INDOOR UNITS

Model name				ARXD18GALH	ARXD24GALH
Power source				230V ~, 50Hz	
Available voltage range				198 to 264 V	
Capacity	Cooling		kW	5.6	7.1
	Heating			6.3	8.0
Input power			W	83	122
Static pressure range			Pa	0 to 90	0 to 50
Standard static pressure			Pa	25	
Fan	Airflow rate	High	m^3 / h (l / s)	940 (261)	1,330 (369)
		Med		840 (233)	1,240 (344)
		Low		750 (208)	1,100 (306)
	Type x Quantity			Sirocco × 3	Sirocco × 4
	Motor output		W	96	
Sound pressure level	High		dB(A)	34	35
	Med			32	32
	Low			28	29
Heat exchanger	Length		mm	700	900
	Fin pitch			1.30	
	Rows x Stages			3 × 14	
	Face Area		m^2	0.21	0.26
	Pipe type (Material)			Grooved H-pin (Copper)	
	Fin	Type (Material)		Slit(Aluminium)	
		Surface treatment		Hydrophilic coating	
Air filter	Type			Fungicide type	
	Net material			PP honeycomb	
Enclosure	Material			galvanized sheet iron	
	Colour			-	
Dimensions (H x W x D)	Net		mm	198 × 900 × 620	198 × 1,100 × 620
	Gross			270 × 1,135 × 770	270 × 1,335 × 770
Weight	Net		kg	22	26
	Gross			27	31
Connection pipe diameter	Liquid (Flare)		mm	ø 9.52	
	Gas (Flare)			ø 15.88	
	Drain hose			VP25 [ø 25(I.D.) ; ø 32(O.D.)]	

INDOOR UNITS

Note : Specifications are based on the following conditions.
Cooling : Indoor temperature of 27°CDB / 19°CWB, and outdoor temperature of 35°CDB / 24°CWB.
Heating : Indoor temperature of 20°CDB / (15°CWB), and outdoor temperature of 7°CDB / 6°CWB.
Pipe length : 7.5 m; Height difference between outdoor unit and indoor unit : 0 m.

2-5. MEDIUM STATIC PRESSURE DUCT TYPE

Model name				ARXA24GBLH	ARXA30GBLH	ARXA36GBLH	ARXA45GBLH
Power source				230V ~, 50Hz			
Available voltage range				198 to 264 V			
Capacity	Cooling		kW	7.1	9.0	11.2	12.5
	Heating			8.0	10.0	12.5	14.0
Input power			W	94	108	194	240
Static pressure range			Pa	0 to 150			
Standard static pressure			Pa	40	50	50	60
Fan	Airflow rate	High	m^3 / h (l / s)	1,280 (356)	1,410 (392)	1,840 (511)	1,970 (547)
		Med		990 (275)	1,280 (356)	1,600 (444)	1,860 (517)
		Low		840 (233)	1,150 (319)	1,470 (408)	1,640 (456)
	Type x Quantity			Sirocco × 2			
	Motor output		W	106	197		
Sound pressure level	High		dB(A)	31	34	37	41
	Med			27	32	35	38
	Low			23	29	33	36
Heat exchanger	Length		mm	1,000			
	Fin pitch			1.40			
	Rows x Stages			3 × 14	4 × 14		
	Face Area		m^2	0.29			
	Pipe type (Material)			Grooved H-pin (Copper)			
	Fin	Type (Material)		Slit(Aluminium)			
		Surface treatment		Hydrophilic coating			
Air filter (Option)	Model name			UTD-LF25NA			
	Type			Fungicide type			
	Net material			PP honeycomb			
Enclosure	Material			galvanized sheet iron			
	Colour			-			
Dimensions (H x W x D)	Net		mm	270 × 1,135 × 700			
	Gross			300 × 1,320 × 790			
Weight	Net		kg	36	40		
	Gross			44	48		
Connection pipe diameter	Liquid (Flare)		mm	ø 9.52			
	Gas (Flare)			ø 15.88		ø 19.05	
	Drain hose			VP25 [ø 25(I.D.) ; ø 32(O.D.)]			

Note : Specifications are based on the following conditions.
Cooling : Indoor temperature of 27°CDB / 19°CWB, and outdoor temperature of 35°CDB / 24°CWB.
Heating : Indoor temperature of 20°CDB / (15°CWB), and outdoor temperature of 7°CDB / 6°CWB.
Pipe length : 7.5 m; Height difference between outdoor unit and indoor unit : 0 m.

INDOOR UNITS

2-6. HIGH STATIC PRESSURE DUCT TYPE

Model name				ARXC36GATH	ARXC45GATH	ARXC60GATH	ARXC72GATH	ARXC90GATH
Power source				230 V ~, 50Hz				
Available voltage range				198 to 264 V				
Capacity	Cooling		kW	11.2	12.5	18.0	22.4	25.0
	Heating			12.5	14.0	20.0	25.0	28.0
Input power			W	405	715	730	1,110	1,250
Static pressure range			Pa	100 to 200	100 to 250	100 to 250	50 to 300	100 to 300
Standard static pressure			Pa	100	100	100	260	250
Fan	Airflow rate	High	m^3 / h (l / s)	2,600 (722)	3,500 (972)	3,500 (972)	3,900 (1,083)	4,300 (1,195)
		Med		1,950 (542)	3,000 (833)	3,000 (833)	3,300 (917)	4,000 (1,111)
		Low		1,450 (403)	2,460 (683)	2,460 (683)	3,000 (833)	3,500 (972)
	Type x Quantity			Sirocco × 2				
	Motor output		W	240	540		780	930
Sound pressure level	High		dB(A)	45	49	49	51	53
	Med			38	45	45	48	51
	Low			32	42	42	45	49
Heat exchanger	Length		mm	890			1,250	
	Fin pitch			1.30		1.45	1.45	
	Rows x Stages			4 × 16			4 × 18	
	Face Area		m^2	0.30			0.50	
	Pipe type (Material)			Grooved H-pin (Copper)			Flatness H-pin (Copper)	
	Fin	Type (Material)		Slit(Aluminium)			Slit(Aluminium)	
		Surface treatment		Hydrophilic coating				
Air filter (Option)	Model name			UTD-LF60KA			-	
	Type			Fungicide type				
	Net material			PP honeycomb				
Enclosure	Material			galvanized sheet iron			galvanized sheet iron	
	Colour			-				
Dimensions (H x W x D)	Net		mm	400 × 1,050 × 500			450 × 1,550 × 700	
	Gross			460 × 1,230 × 640			550 × 1,750 × 825	
Weight	Net		kg	43	46		83	85
	Gross			48	51		99	101
Connection pipe diameter	Liquid		mm	ø 9.52(Flare)			ø 12.70 (Brazing)	
	Gas			ø 19.05 (Flare)			ø 22.22 (Brazing)	
	Drain hose			VP25 [ø 25(I.D.) ; ø 32(O.D.)]				

Note : Specifications are based on the following conditions.
Cooling : Indoor temperature of 27°CDB / 19°CWB, and outdoor temperature of 35°CDB / 24°CWB.
Heating : Indoor temperature of 20°CDB / (15°CWB), and outdoor temperature of 7°CDB / 6°CWB.
Pipe length : 7.5 m; Height difference between outdoor unit and indoor unit : 0 m.

INDOOR UNITS

2-7. FLOOR / CEILING TYPE

Model name				AB∗A12GATH	AB∗A14GATH	AB∗A18GATH	AB∗A24GATH
Power source				230V ~, 50Hz			
Available voltage range				198 to 264 V			
Capacity	Cooling		kW	3.6	4.5	5.6	7.1
	Heating			4.0	5.0	6.3	8.0
Input power			W	30	42	74	99
Fan	Airflow rate	High	m^3 / h (l / s)	660 (183)	780 (216)	1,000 (277)	1,000 (277)
		Med		570 (158)	640 (177)	720 (199)	820 (227)
		Low		490 (136)	550 (152)	580 (161)	680 (188)
	Type x Quantity			Sirocco × 2			
	Motor output		W	80			
Sound pressure level	High		dB(A)	36	40	46	47
	Med			32	36	39	42
	Low			28	34	35	37
Heat exchanger	Length		mm	800			
	Fin pitch			1.20	1.30		
	Rows x Stages			2 × 12	3 × 12		4 × 12
	Face Area		m^2	0.20			
	Pipe type (Material)			Grooved H-pin (Copper)			
	Fin	Type (Material)		Slit(Aluminium)			
		Surface treatment		Hydrophilic coating			
Air filter	Type			Anti-mold			
	Net material			PP monofilament net			
Enclosure	Material			Plastic			
	Colour			WHITE Approximate colour of MUNSELL N9.25/			
Dimensions (H x W x D)	Net		mm	199 × 990 × 655			
	Gross			320 × 1,150 × 790			
Weight	Net		kg	25	26		27
	Gross			35	36		38
Connection pipe diameter	Liquid (Flare)		mm	ø 6.35		ø 9.52	
	Gas (Flare)			ø 12.70		ø 15.88	
	Drain hose			VP25 [ø 25(I.D.) ; ø 32(O.D.)]			

Note : Specifications are based on the following conditions.
Cooling : Indoor temperature of 27°CDB / 19°CWB, and outdoor temperature of 35°CDB / 24°CWB.
Heating : Indoor temperature of 20°CDB / (15°CWB), and outdoor temperature of 7°CDB / 6°CWB.
Pipe length : 7.5 m; Height difference between outdoor unit and indoor unit : 0 m.

INDOOR UNITS

2-8. CEILING TYPE

Model name				AB∗A30GATH	AB∗A36GATH	AB∗A45GATH	AB∗A54GATH
Power source				230V ~, 50Hz			
Available voltage range				198 to 264 V			
Capacity	Cooling		kW	9.0	11.2	12.5	14.0
	Heating			10.0	12.5	14.0	16.0
Input power			W	66	85	131	180
Fan	Airflow rate	High	m^3 / h (l / s)	1,630 (452)	1,690 (469)	2,010 (558)	2,270 (629)
		Med		1,370 (379)	1,400 (389)	1,600 (444)	1,780 (493)
		Low		1,140 (316)	1,170 (325)	1,230 (342)	1,280 (355)
	Type x Quantity			Sirocco × 4			
	Motor output		W	130			
Sound pressure level	High		dB(A)	42	45	48	51
	Med			38	38	42	45
	Low			33	34	35	36
Heat exchanger	Length		mm	1,350			
	Fin pitch			1.45			
	Rows x Stages			3 × 12	3 ×12 1×8		
	Face Area		m^2	0.34	0.34		
	Pipe type (Material)			Grooved H-pin (Copper)			
	Fin	Type (Material)		Slit(Aluminium)			
		Surface treatment		Hydrophilic coating			
Air filter	Type			Anti-mold			
	Net material			PP monofilament net			
Enclosure	Material			Plastic			
	Colour			WHITE Approximate colour of MUNSELL N9.25/			
Dimensions (H x W x D)	Net		mm	240 × 1,660 × 700			
	Gross			318 × 1,800 × 790			
Weight	Net		kg	46	48		
	Gross			59	61		
Connection pipe diameter	Liquid (Flare)		mm	ø 9.52			
	Gas (Flare)			ø 15.88	ø 19.05		
	Drain hose			VP25 [ø 25(I.D.) ; ø 32(O.D.)]			

Note : Specifications are based on the following conditions.
Cooling : Indoor temperature of 27°CDB / 19°CWB, and outdoor temperature of 35°CDB / 24°CWB.
Heating : Indoor temperature of 20°CDB / (15°CWB), and outdoor temperature of 7°CDB / 6°CWB.
Pipe length : 7.5 m; Height difference between outdoor unit and indoor unit : 0 m.

INDOOR UNITS

2-9. WALL MOUNTED TYPE

Model name				AS∗A04GACH	AS∗A07GACH	AS∗A09GACH	AS∗A12GACH	AS∗A14GACH
Power source				230V ~, 50Hz				
Available voltage range				198 to 264 V				
Capacity	Cooling		kW	1.1	2.2	2.8	3.6	4.5
	Heating			1.3	2.8	3.2	4.1	5.0
Input power			W	13	17	18	22	34
Fan	Airflow rate	High	m^3 / h (l / s)	450 (125)	490 (136)	500 (139)	560 (156)	670 (186)
		Med		440 / 370* 1 (122 / 103)	450 (125)	450 (125)	480 (133)	490 (136)
		Low		420 / 320 *1 (117 / 89)	420 / 370 *1 (117 / 103)	420 / 370 *1 (117 / 103)	420 (117)	420 (117)
	Type x Quantity			Cross flow × 1				
	Motor output		W	42				
Sound pressure level	High		dB(A)	33	35	36	39	44
	Med			32 / 27 *1	33	33	35	37
	Low			31 / 22 *1	31 / 27*1	31 / 27*1	31	32
Heat exchanger	Length		mm	600				
	Fin pitch			1.20				
	Rows x Stages			2×16				
	Face Area		m^2	0.20				
	Pipe type (Material)			Grooved H-pin (Copper)				
	Fin	Type (Material)		Slit(Aluminium)				
		Surface treatment		Hydrophilic coating				
Air filter	Type			Antibacterial and Mold proofing, Ion deodorization				
	Net material			PP honeycomb				
Enclosure	Material			Plastic				
	Colour			WHITE Approximate colour of MUNSELL N9.25/				
Dimensions (H x W x D)	Net		mm	275 × 790 × 215				
	Gross			290 × 835 × 345				
Weight	Net		kg	9				
	Gross			12				
Connection pipe diameter	Liquid (Flare)		mm	ø 6.35				
	Gas (Flare)			ø 12.70				
	Drain hose			ø 13.8(I.D.) ; ø 15.8 - ø 16.7(O.D.)				

*1: This value is "cooling operation / heating operation".

Note : Specifications are based on the following conditions.
Cooling : Indoor temperature of 27°CDB / 19°CWB, and outdoor temperature of 35°CDB / 24°CWB.
Heating : Indoor temperature of 20°CDB / (15°CWB), and outdoor temperature of 7°CDB / 6°CWB.
Pipe length : 7.5 m; Height difference between outdoor unit and indoor unit : 0 m.

INDOOR UNITS

2-10. WALL MOUNTED TYPE (EEV external model)

Model name				AS∗E04GACH	AS∗E07GACH	AS∗E09GACH	AS∗E12GACH	AS∗E14GACH
Power source				230V ~, 50Hz				
Available voltage range				198 to 264 V				
Capacity	Cooling		kW	1.1	2.2	2.8	3.6	4.5
	Heating			1.3	2.8	3.2	4.1	5.0
Input power			W	12	15	16	21	34
Fan	Airflow rate	High	m^3 / h (l / s)	450 (125)	490 (136)	500 (139)	560 (156)	680 (189)
		Med		440 / 370 *1 (122 / 103)	450 (125)	450 (125)	480 (133)	490 (136)
		Low		420 / 300 *1 (117 / 83)	420 / 370 *1 (117 / 103)	420 / 370 *1 (117 / 103)	420 (117)	420 (117)
	Type x Quantity			Cross flow × 1				
	Motor output		W	42				
Sound pressure level	High		dB(A)	32	34	35	38	43
	Med			31 / 26 *1	32	32	34	35
	Low			30 / 19 *1	30 / 26 *1	30 / 26 *1	30	30
Heat exchanger	Length		mm	635				
	Fin pitch			1.20				
	Rows x Stages			2×16				
	Face Area		m^2	0.21				
	Pipe type (Material)			Grooved H-pin (Copper)				
	Fin	Type (Material)		Slit(Aluminium)				
		Surface treatment		Hydrophilic coating				
Air filter	Type			Antibacterial and Mold proofing, Ion deodorization				
	Net material			PP honeycomb				
Enclosure	Material			Plastic				
	Colour			WHITE Approximate colour of MUNSELL N9.25/				
Dimensions (H x W x D)	Net		mm	275 × 790 × 215				
	Gross			290 × 835 × 345				
Weight	Net		kg	9				
	Gross			12				
Connection pipe diameter	Liquid (Flare)		mm	ø 6.35				
	Gas (Flare)			ø 12.70				
	Drain hose			ø 13.8(I.D.) ; ø 15.8 - ø 16.7(O.D.)				
EV Kit (Option)				UTR - EV09XB			UTR - EV14XB	

*1: This value is "cooling operation / heating operation".

Note : Specifications are based on the following conditions.
Cooling : Indoor temperature of 27°CDB / 19°CWB, and outdoor temperature of 35°CDB / 24°CWB.
Heating : Indoor temperature of 20°CDB / (15°CWB), and outdoor temperature of 7°CDB / 6°CWB.
Pipe length : 7.5 m; Height difference between outdoor unit and indoor unit : 0 m.

INDOOR UNITS

2-11. WALL MOUNTED TYPE

Model name				AS∗A18GACH	AS∗A24GACH	AS∗A30GACH
Power source				230V ~, 50Hz		
Available voltage range				198 to 264 V		
Capacity	Cooling		kW	5.6	7.1	8.0
	Heating			6.3	8.0	9.0
Input power			W	32	60	91
Fan	Airflow rate	High	m^3 / h (l / s)	840 (233)	1100 (305)	1240 (343)
		Med		770 (213)	910 (252)	980 (271)
		Low		690 (191)	730 (202)	770 (213)
	Type x Quantity			Cross flow × 1		
	Motor output		W	42		65
Sound pressure level	High		dB(A)	41	48	52
	Med			39	43	45
	Low			35	35	35
Heat exchanger	Length		mm	817		
	Fin pitch			1.20 1.40		
	Rows x Stages			2 × 18 1×4(2 pieces)		
	Face Area		m^2	0.31		
	Pipe type (Material)			Grooved H-pin (Copper)		
	Fin	Type (Material)		Slit (Aluminium)		
		Surface treatment		Hydrophilic coating		
Air filter	Type			Deodorization / Anti-mold		
	Net material			PP monofilament net		
Enclosure	Material			Plastic		
	Colour			WHITE Approximate colour of MUNSELL N9.25/		
Dimensions (H x W x D)	Net		mm	320 × 998 × 228		
	Gross			319 × 1,090 × 429		
Weight	Net		kg	15		
	Gross			19		
Connection pipe diameter	Liquid (Flare)		mm	ø 9.52		
	Gas (Flare)			ø 15.88		
	Drain hose			ø 12(I.D.) ; ø 16(O.D.)		

Note : Specifications are based on the following conditions.
Cooling : Indoor temperature of 27°CDB / 19°CWB, and outdoor temperature of 35°CDB / 24°CWB.
Heating : Indoor temperature of 20°CDB / (15°CWB), and outdoor temperature of 7°CDB / 6°CWB.
Pipe length : 7.5 m; Height difference between outdoor unit and indoor unit : 0 m.

INDOOR UNITS

3. ELECTRIC CHARACTERISTICS

Indoor Unit		Power Supply				Indoor Rated	
Type	Model	Voltage (V)	Frequency (Hz)	MCA (A)	MFA (A)	Input Power (kW)	Current (A)
Compact Cassette	AUXB04GALH	230~	50	0.20	20	0.023	0.17
	AUXB07GALH			0.20		0.025	0.17
	AUXB09GALH			0.20		0.025	0.17
	AUXB12GALH			0.24		0.029	0.20
	AUXB14GALH			0.29		0.035	0.24
	AUXB18GALH			0.30		0.036	0.25
	AUXB24GALH			0.75		0.084	0.62
Cassette	AUXD18GALH	230~	50	0.32	20	0.039	0.27
	AUXD24GALH			0.38		0.046	0.32
	AUXA30GALH			0.51		0.059	0.42
	AUXA36GALH			0.64		0.080	0.53
	AUXA45GALH			0.83		0.099	0.69
	AUXA54GALH			0.94		0.119	0.78
Low Static Pressure Duct / Concealed Floor	ARXB07GALH	230~	50	0.29	20	0.046	0.24
	ARXB09GALH			0.30		0.055	0.25
	ARXB12GALH			0.36		0.063	0.30
	ARXB14GALH			0.48		0.090	0.40
	ARXB18GALH			0.51		0.096	0.42
Slim Duct / Slim Concealed Floor	ARXD04GALH	230~	50	0.36	20	0.040	0.30
	ARXD07GALH			0.38		0.044	0.31
	ARXD09GALH			0.42		0.050	0.35
	ARXD12GALH			0.46		0.054	0.38
	ARXD14GALH			0.74		0.092	0.61
	ARXD18GALH			0.66		0.083	0.55
	ARXD24GALH			0.94		0.122	0.78
Medium Static Pressure Duct	ARXA24GBLH	230~	50	1.00	20	0.094	0.60
	ARXA30GBLH			1.12		0.108	0.69
	ARXA36GBLH			1.68		0.194	1.18
	ARXA45GBLH			2.12		0.240	1.43
High Static Pressure Duct	ARXC36GATH	230~	50	2.11	20	0.405	1.76
	ARXC45GATH			3.77		0.715	3.14
	ARXC60GATH			3.78		0.730	3.15
	ARXC72GATH			5.55		1.110	4.62
	ARXC90GATH			6.55		1.250	5.47
Floor / Ceiling	AB∗A12GATH	230~	50	0.30	20	0.030	0.25
	AB∗A14GATH			0.41		0.042	0.34
	AB∗A18GATH			0.69		0.074	0.57
	AB∗A24GATH			0.84		0.099	0.70
Ceiling	AB∗A30GATH	230~	50	0.52	20	0.066	0.43
	AB∗A36GATH			0.66		0.085	0.55
	AB∗A45GATH			0.98		0.131	0.81
	AB∗A54GATH			1.32		0.180	1.10
Wall Mounted (EEV external Model)	AS∗E04GACH	230~	50	0.20	20	0.012	0.17
	AS∗E07GACH			0.22		0.015	0.18
	AS∗E09GACH			0.23		0.016	0.19
	AS∗E12GACH			0.28		0.021	0.23
	AS∗E14GACH			0.42		0.034	0.35
Wall Mounted	AS∗A04GACH	230~	50	0.19	20	0.013	0.16
	AS∗A07GACH			0.21		0.017	0.17
	AS∗A09GACH			0.22		0.018	0.18
	AS∗A12GACH			0.24		0.022	0.20
	AS∗A14GACH			0.36		0.034	0.30
	AS∗A18GACH			0.40		0.032	0.33
	AS∗A24GACH			0.63		0.060	0.52
	AS∗A30GACH			0.82		0.091	0.69

MCA : Min Circuit Amps = Max Operating Current (Full Load).

MFA : Main Fuse (Circuit breaker) Amps.

INDOOR UNITS

4. DIMENSIONS

4-1. COMPACT CASSETTE TYPE

■ MODELS : AUXB04GALH, AUXB07GALH, AUXB09GALH, AUXB12GALH, AUXB14GALH, AUXB18GALH, AUXB24GALH

(Unit : mm)

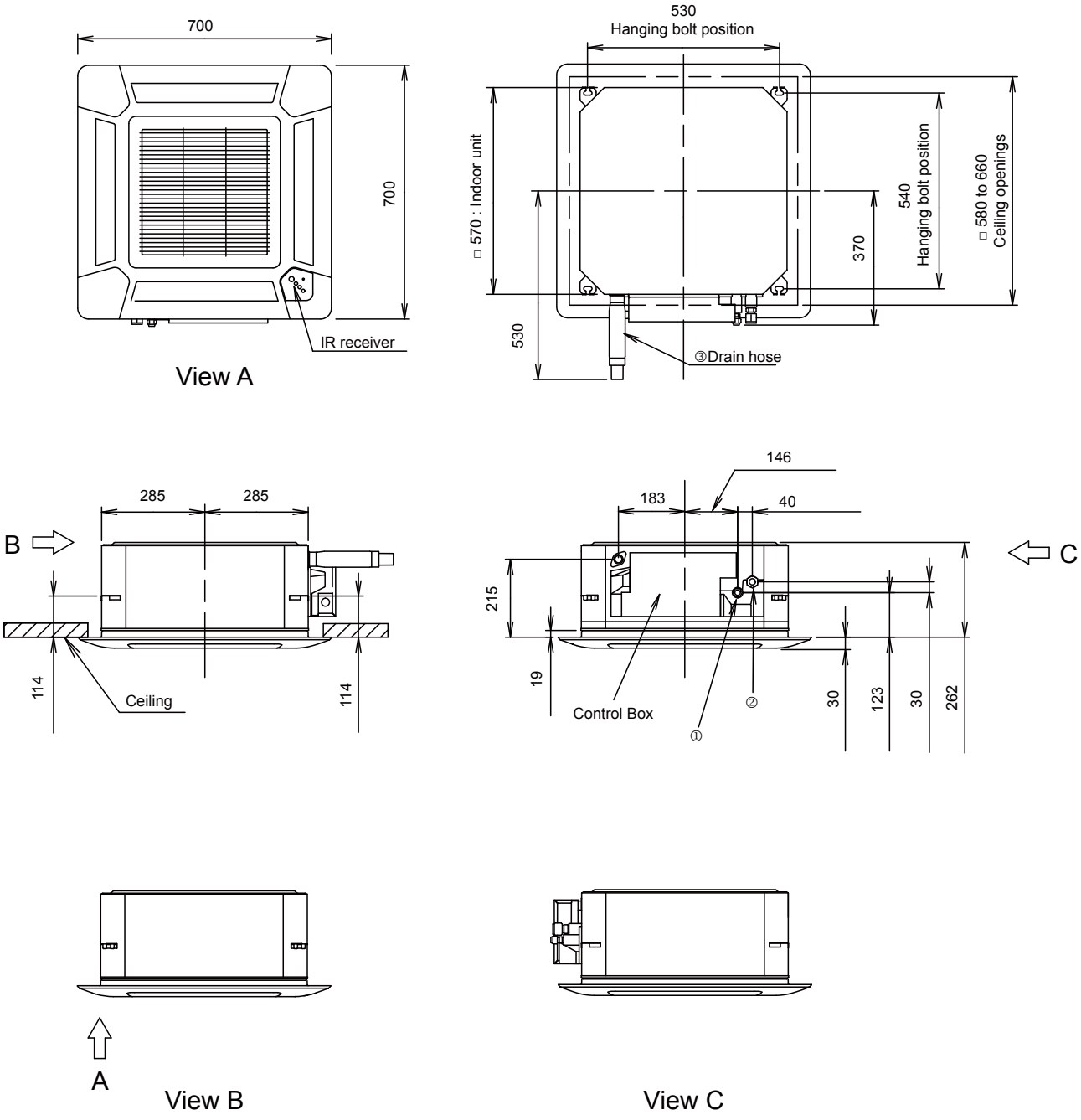

			AUXB04, AUXB07, AUXB09, AUXB12, AUXB14	AUXB18, AUXB24
①	Refrigerant pipe flare connection	Liquid	ø 6.35 mm	ø 9.52 mm
②		Gas	ø 12.70 mm	ø 15.88 mm
③	Drain hose		VP25 [ø 25mm(I.D.) ; ø 32mm(O.D.)]	

■ INSTALLATION PLACE

(Unit : mm)

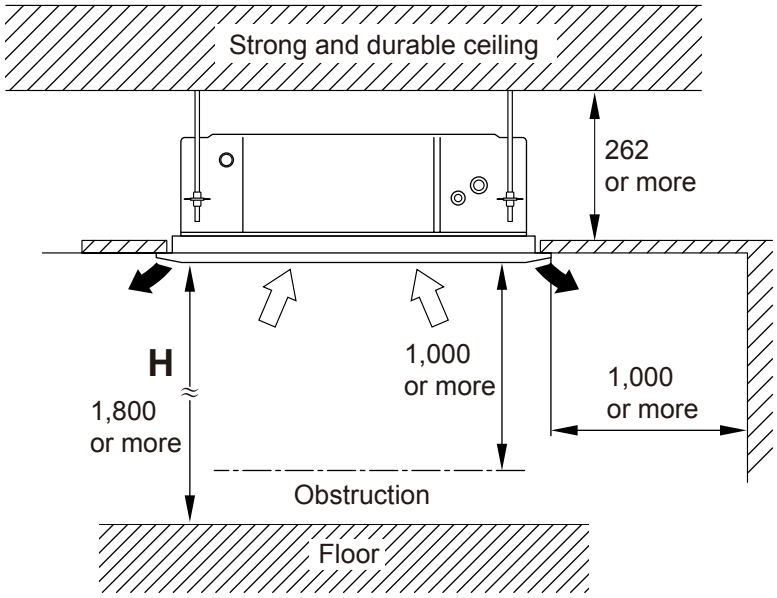

	H (The maximum height from floor to ceiling) (mm)	
Model name	AUXB04/07/09	AUXB12/14/18/24
Standard mode	2,700	2,700
High Ceiling mode	-	3,000

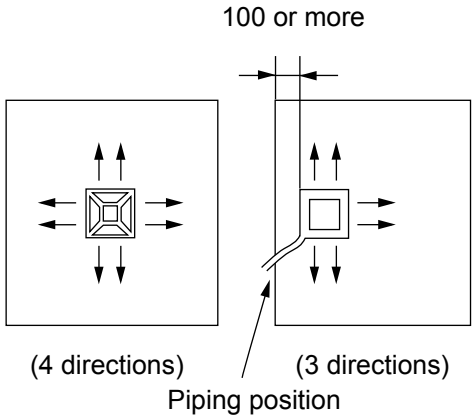

INDOOR UNITS

4-2. CASSETTE TYPE

■ MODELS : AUXD18GALH, AUXD24GALH

(Unit : mm)

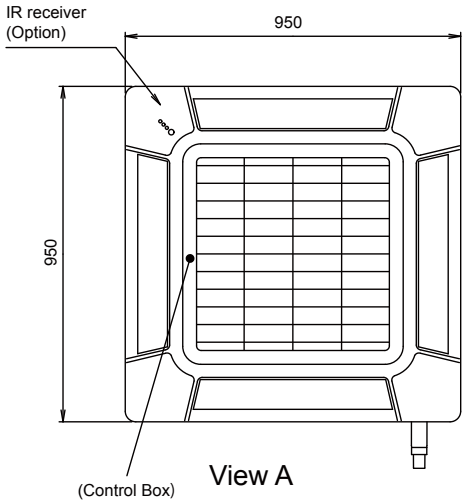

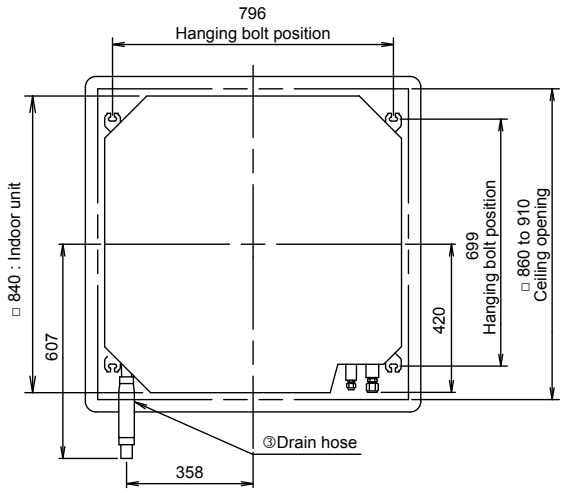

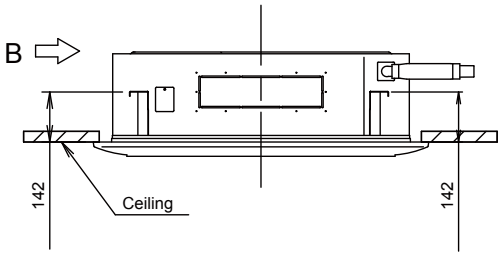

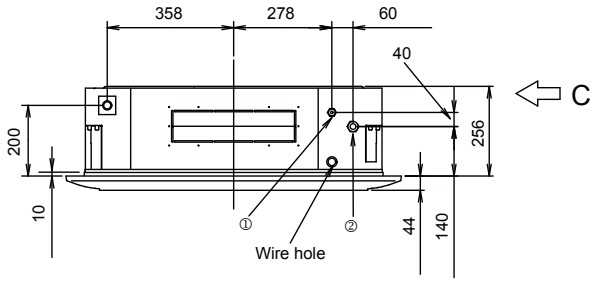

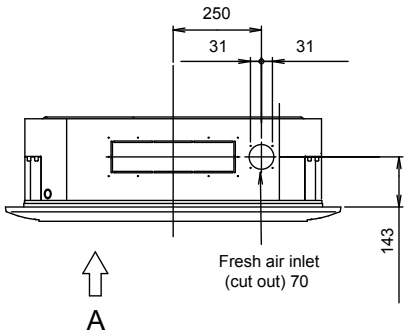

View B

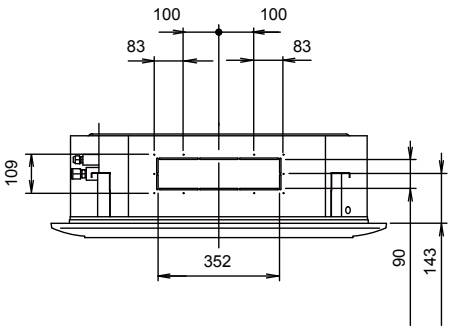

View C

			AUXD18, AUXD24
①	Refrigerant pipe flare connection	Liquid	ø 9.52 mm
②		Gas	ø 15.88 mm
③	Drain hose		VP25 [ø 25mm(I.D.) ; ø 32mm(O.D.)]

INDOOR UNITS

■ MODELS : AUXA30GALH, AUXA36GALH, AUXA45GALH, AUXA54GALH

(Unit : mm)

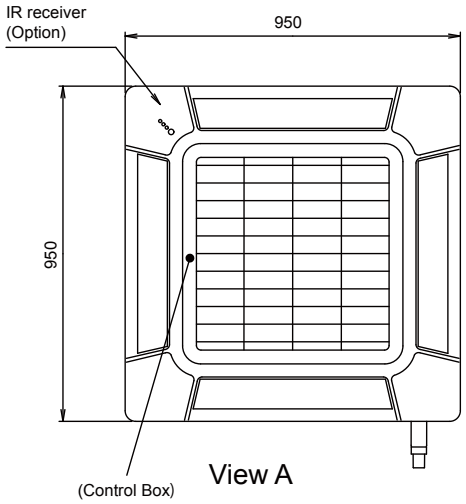

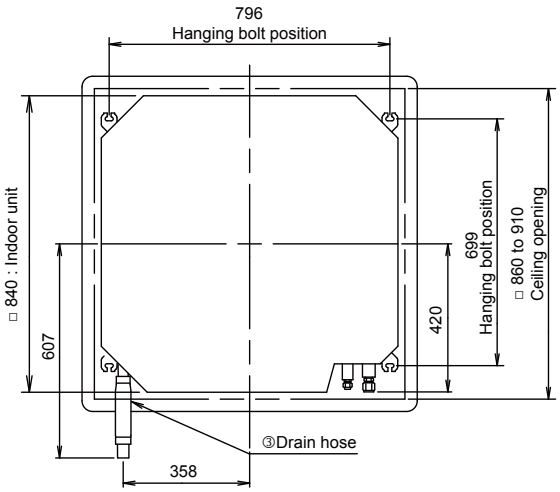

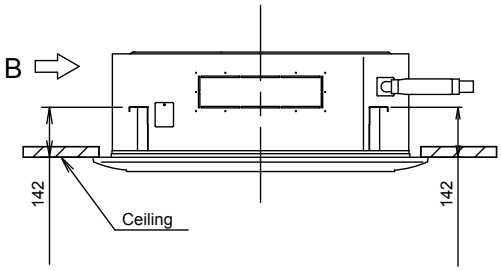

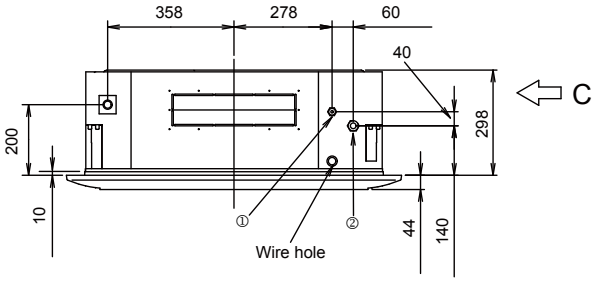

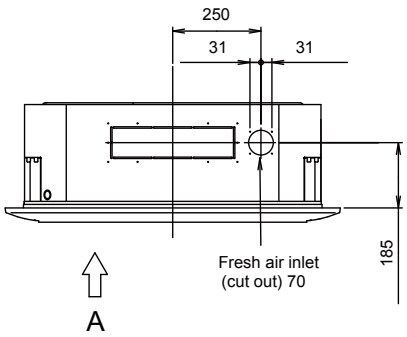

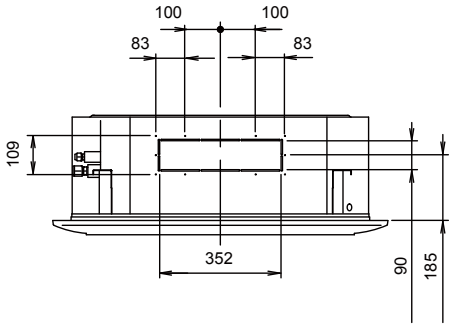

			AUXA30	AUXA36, AUXA45, AUXA54
①	Refrigerant pipe flare connection	Liquid	ø 9.52 mm	
②		Gas	ø 15.88 mm	ø 19.05 mm
③	Drain hose		VP25 [ø 25mm(I.D.) ; ø 32mm(O.D.)]	

(Unit : mm)

■ INSTALLATION PLACE

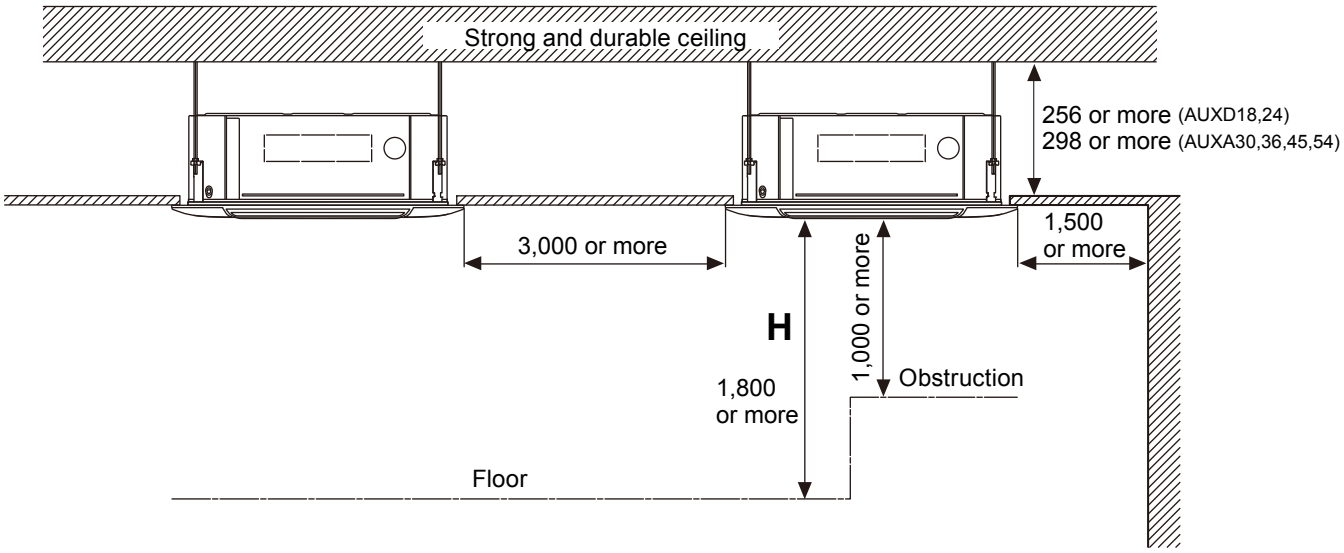

INDOOR UNITS

	H (The maximum height from floor to ceiling) (mm)					
Model name	AUXD18	AUXD24	AUXA30	AUXA36	AUXA45	AUXA54
Standard mode	3,000	3,000	3,200	3,200	3,200	3,200
High Ceiling mode	3,500	3,500	3,600	4,200	4,200	4,200

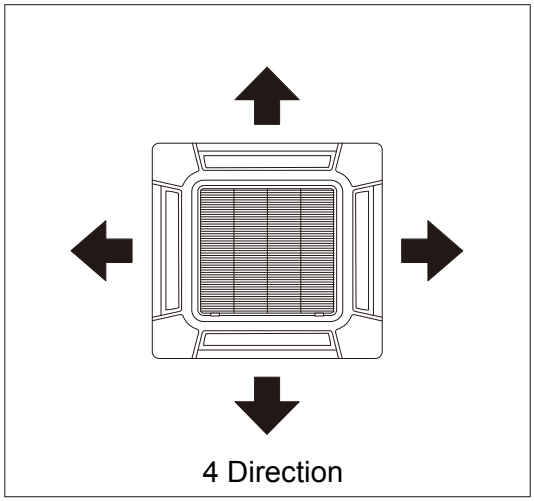

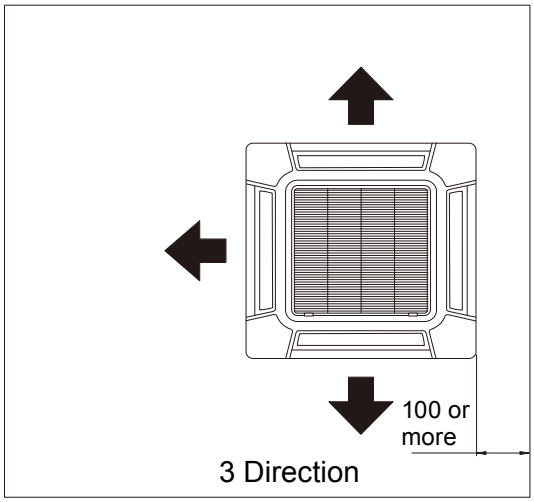

4-3. LOW STATIC PRESSURE DUCT / CONCEALED FLOOR TYPE

■ MODELS : ARXB07GALH, ARXB09GALH

(Unit : mm)

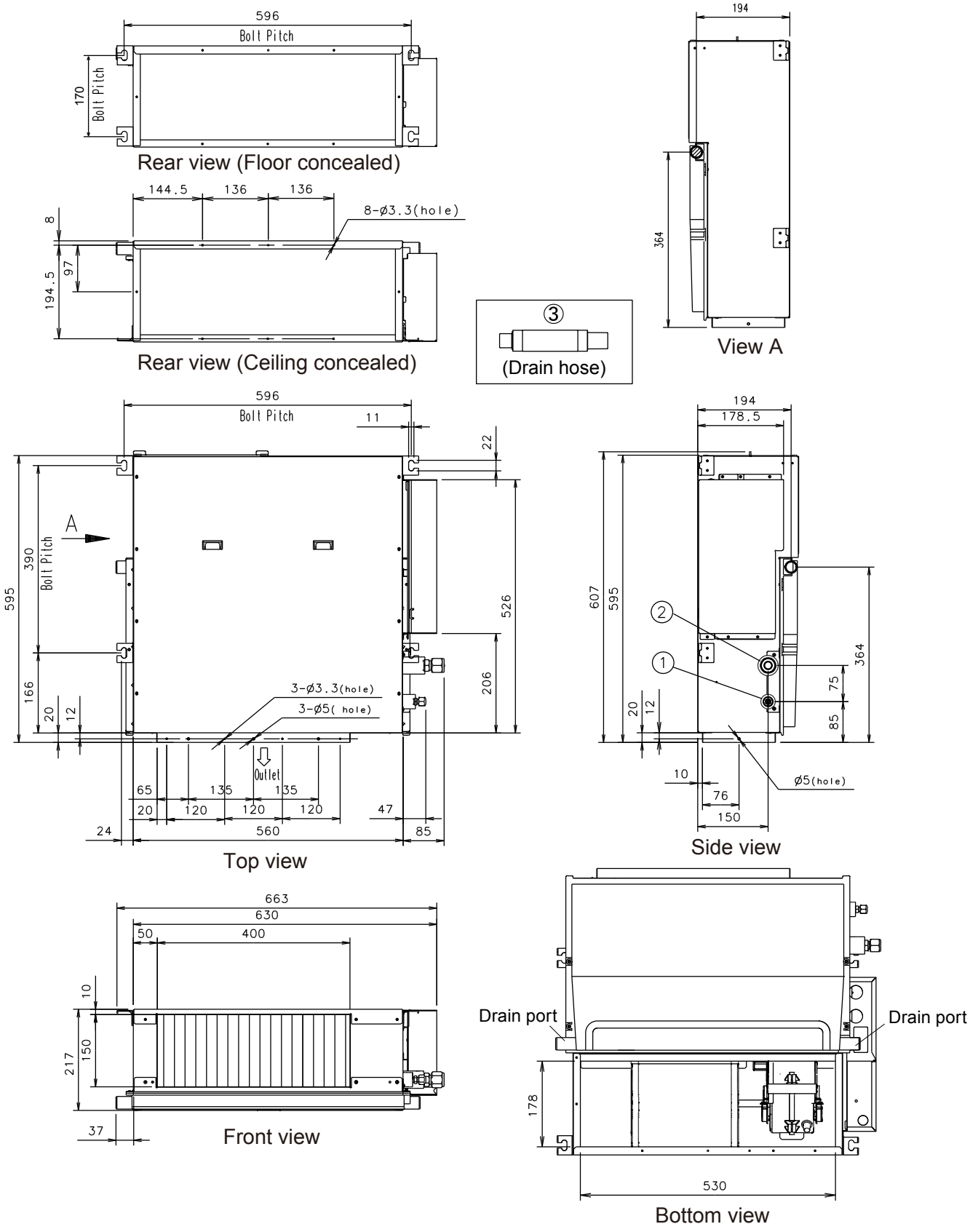

			ARXB07, ARXB09
①	Refrigerant pipe flare connection	Liquid	ø 6.35 mm
②		Gas	ø 12.70 mm
③	Drain hose		VP25 [ø 25mm(I.D.) ; ø 32mm(O.D.)]

■ MODELS : ARXB12GALH, ARXB14GALH, ARXB18GALH

(Unit : mm)

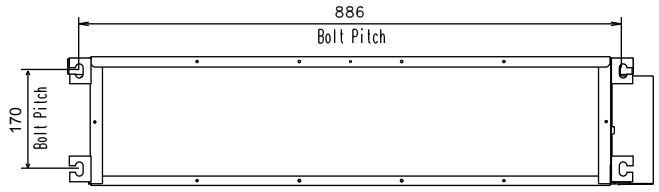

Rear view (Floor concealed)

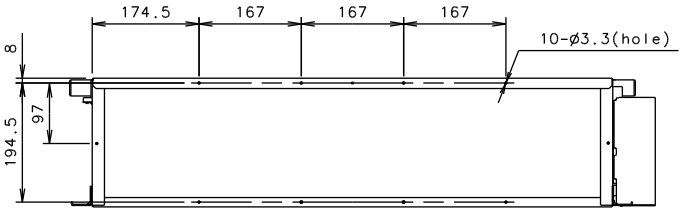

Rear view (Ceiling concealed)

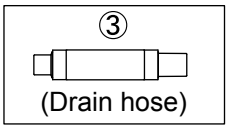

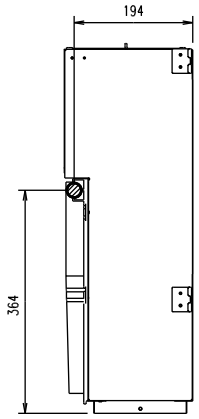

View A

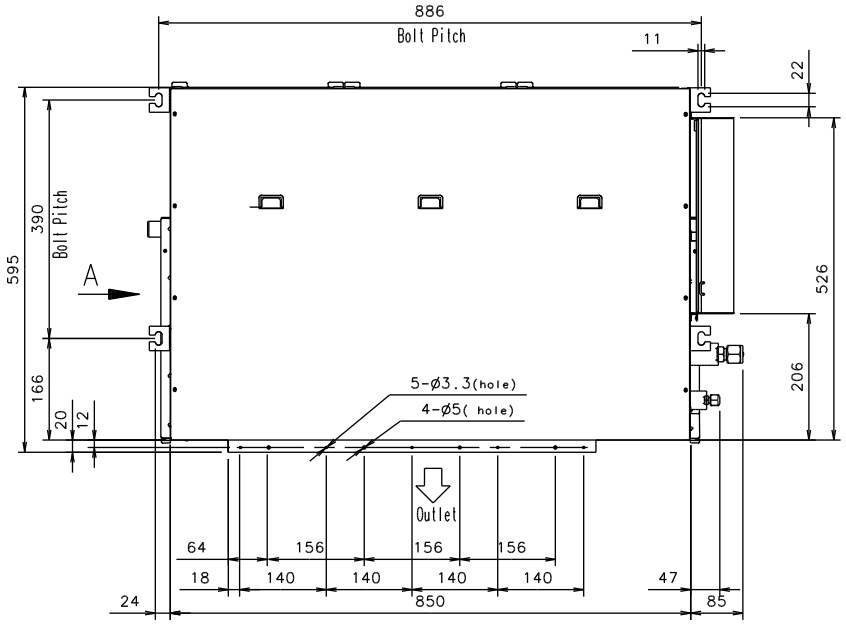

Top view

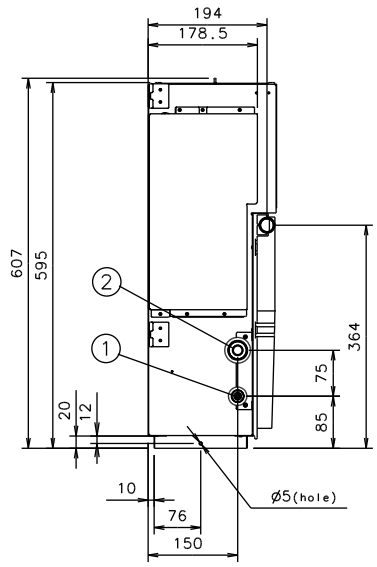

Side view

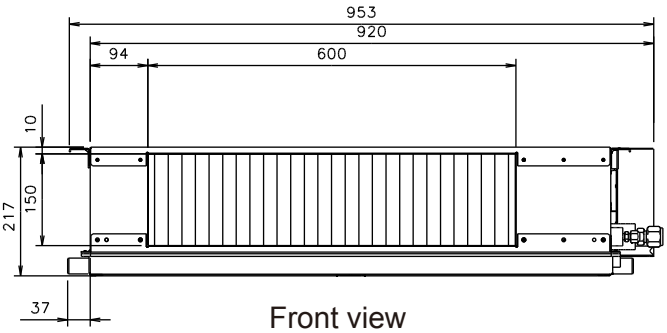

Front view

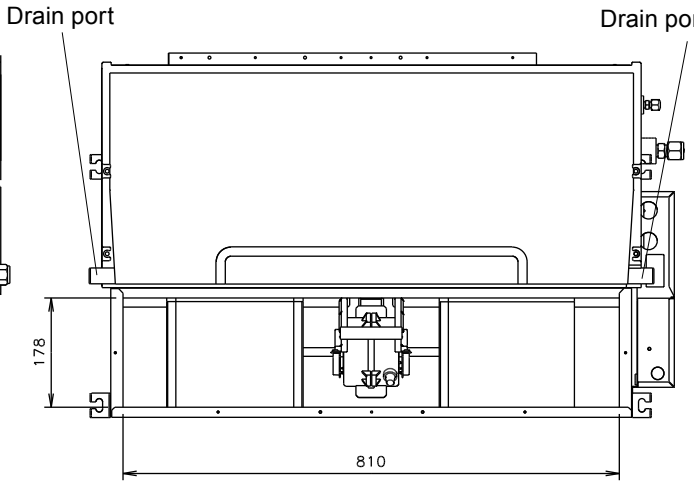

			ARXB12, ARXB14	ARXB18
①	Refrigerant pipe flare connection	Liquid	ø 6.35 mm	ø 9.52 mm
②		Gas	ø 12.70 mm	ø 15.88 mm
③	Drain hose		VP25 [ø 25mm(I.D.) ; ø 32mm(O.D.)]	

■ INSTALLATION PLACE ∗1

(Unit : mm)

∗1 When drain pump is used, leave the space required for service and maintenance (Refer to 6-10-1. DRAIN PUMP UNIT)

∗2 When drain hose is connected, the required dimension is 400mm or more.

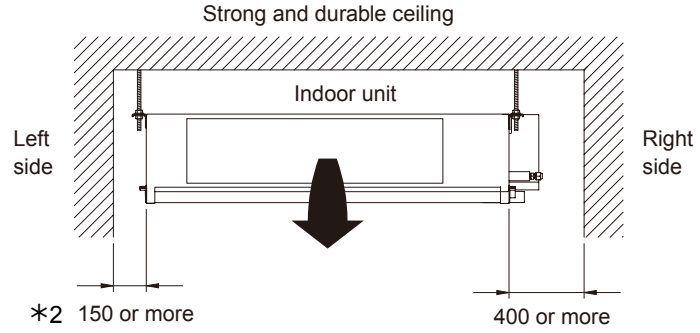

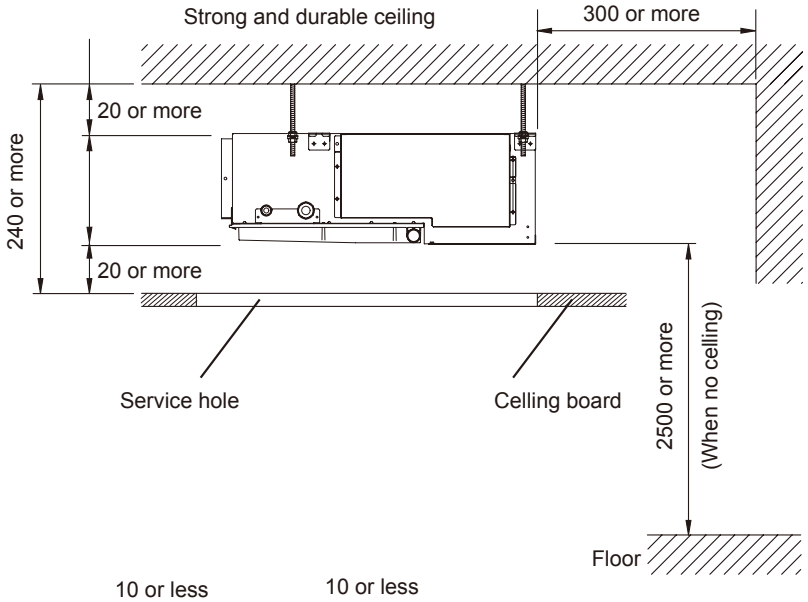

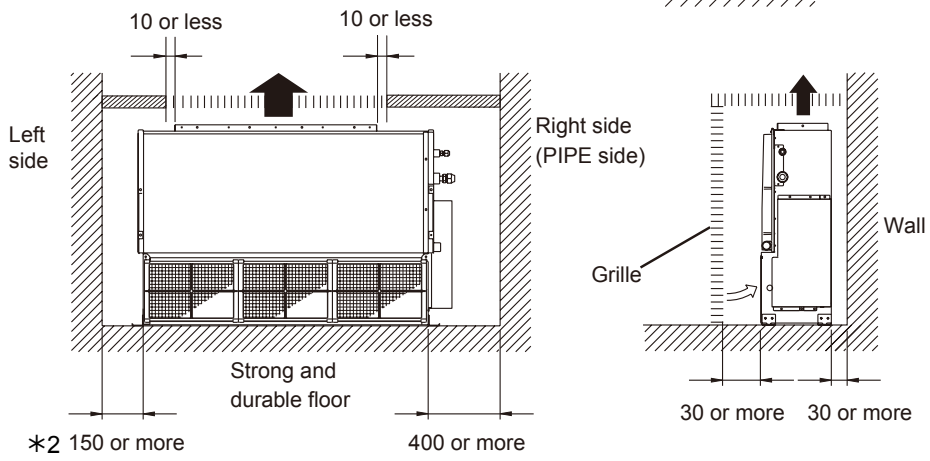

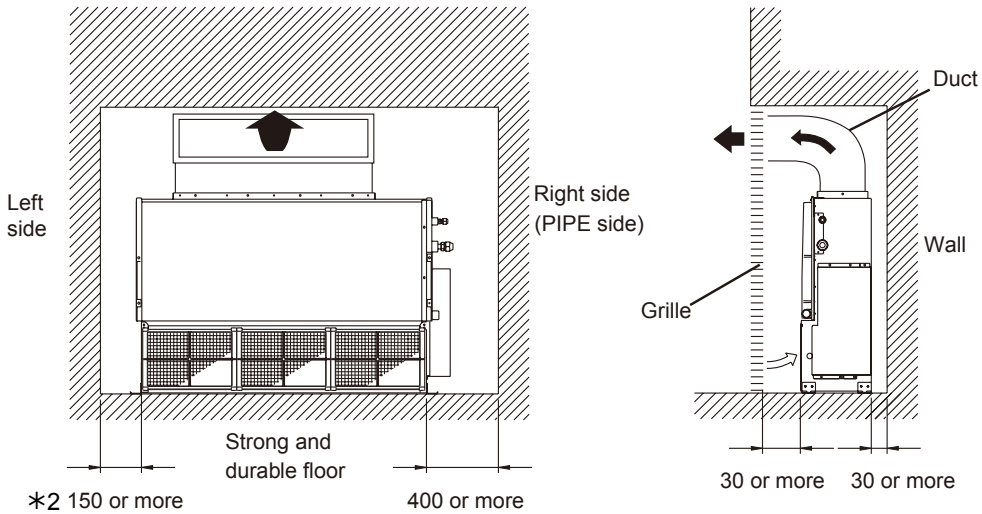

INDOOR UNITS

■ BIRD'S-EYE VIEW

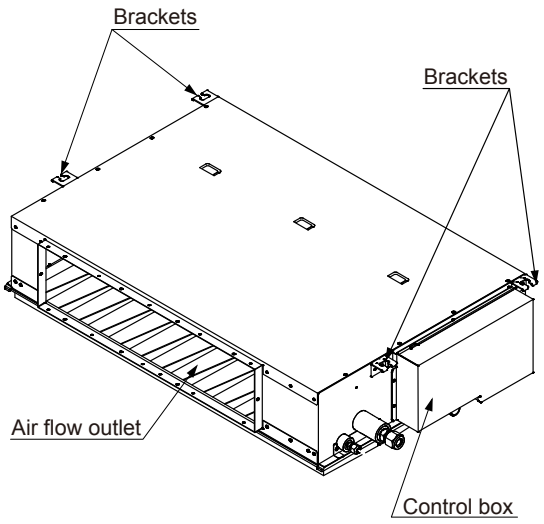

■ MAINTENANCE SPACE

Provide a service access for inspection purposes as shown below.
Do not place any wiring or illumination in the service space, as they will impede service.

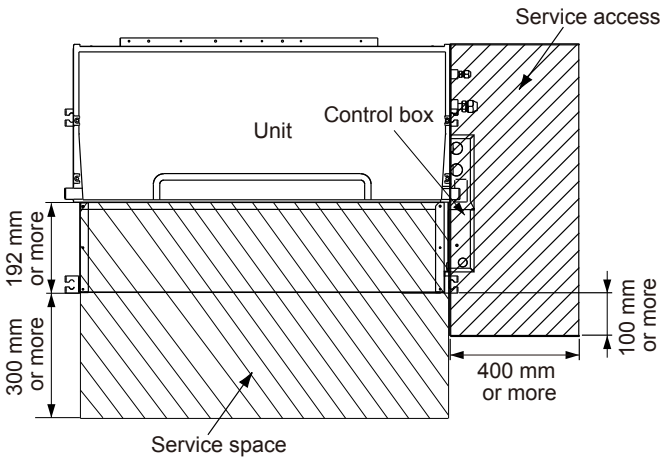

INDOOR UNITS

4-4. SLIM DUCT / SLIM CONCEALED FLOOR TYPE

■ MODELS : ARXD04GALH, ARXD07GALH, ARXD09GALH, ARXD12GALH, ARXD14GALH

(Unit : mm)

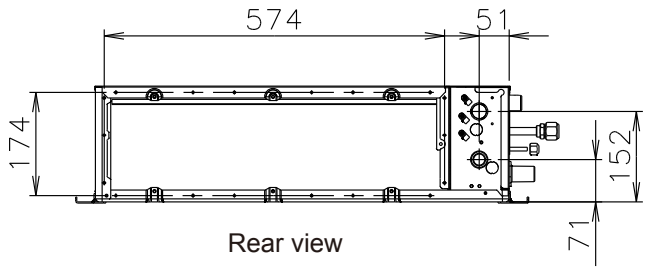

Rear view

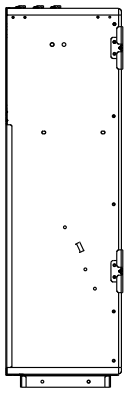

View A

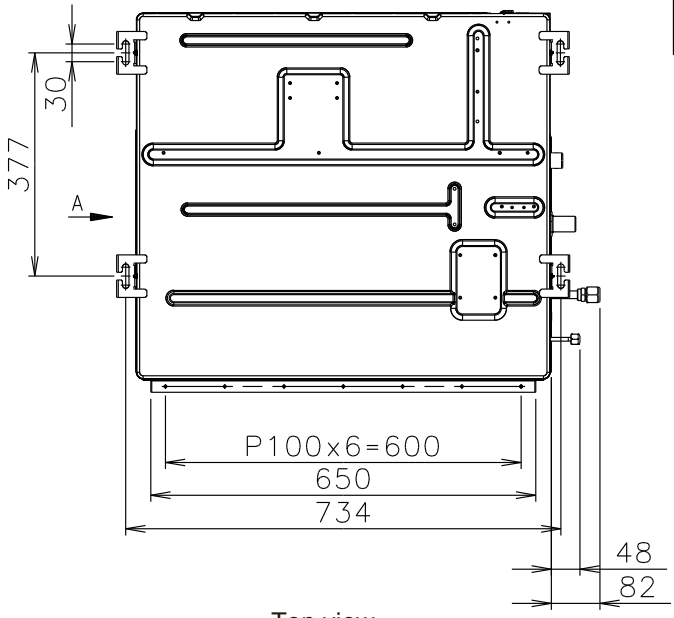

Top view

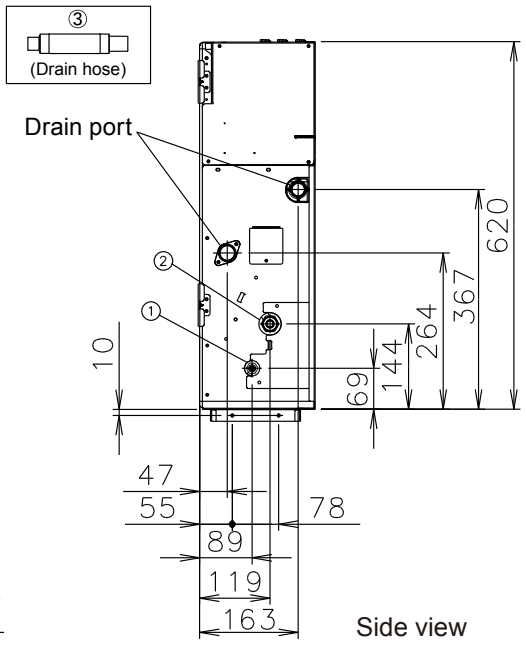

Side view

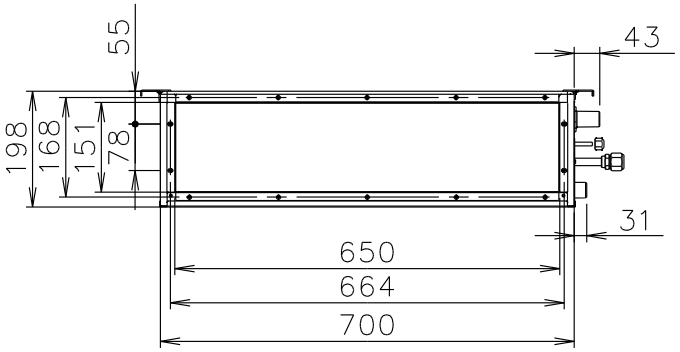

Front view

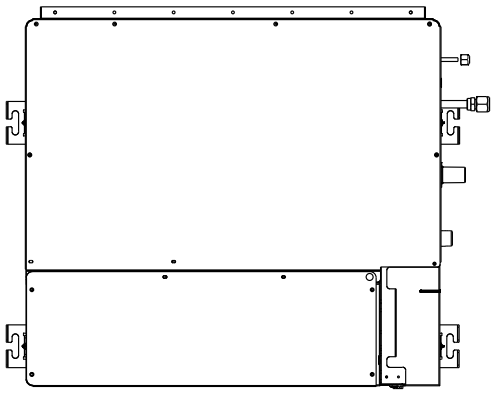

Bottom view

			ARXD04, ARXD07, ARXD09, ARXD12, ARXD14
①	Refrigerant pipe flare connection	Liquid	ø 6.35 mm
②		Gas	ø 12.70 mm
③	Drain hose		VP25 [ø 25mm(I.D.) ; ø 32mm(O.D.)]

■ MODELS : ARXD18GALH

(Unit : mm)

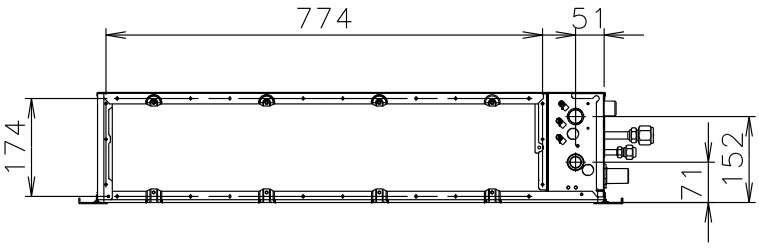

Rear view

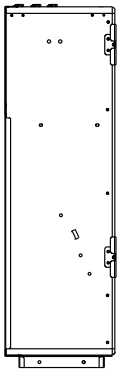

View A

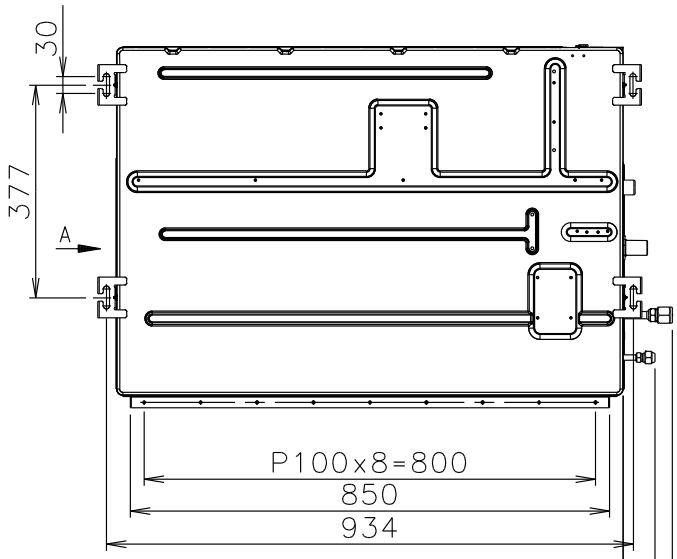

Top view

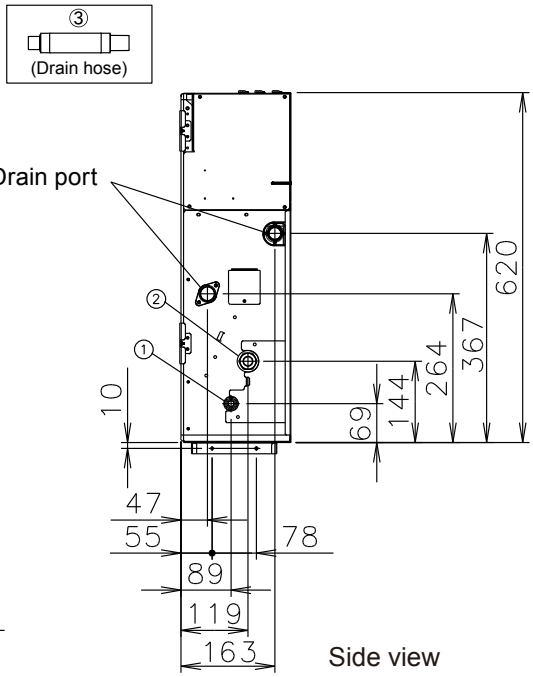

Side view

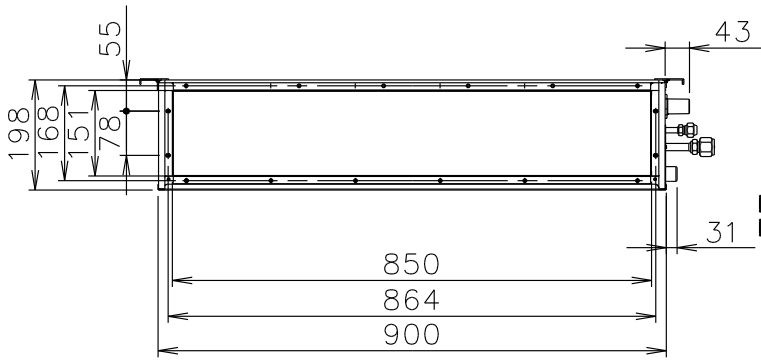

Front view

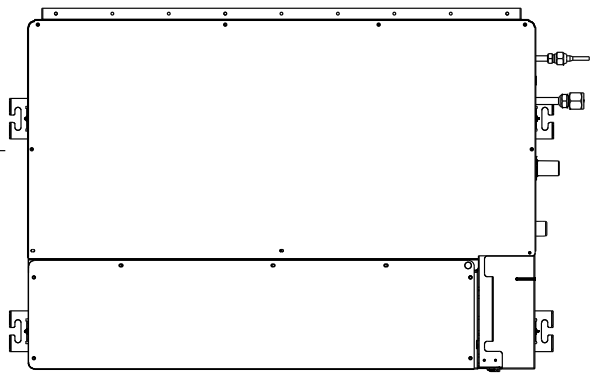

Bottom view

			ARXD18
①	Refrigerant pipe flare connection	Liquid	ø 9.52 mm
②		Gas	ø 15.88 mm
③	Drain hose		VP25 [ø 25mm(I.D.) ; ø 32mm(O.D.)]

INDOOR UNITS

■ MODELS : ARXD24GALH

(Unit : mm)

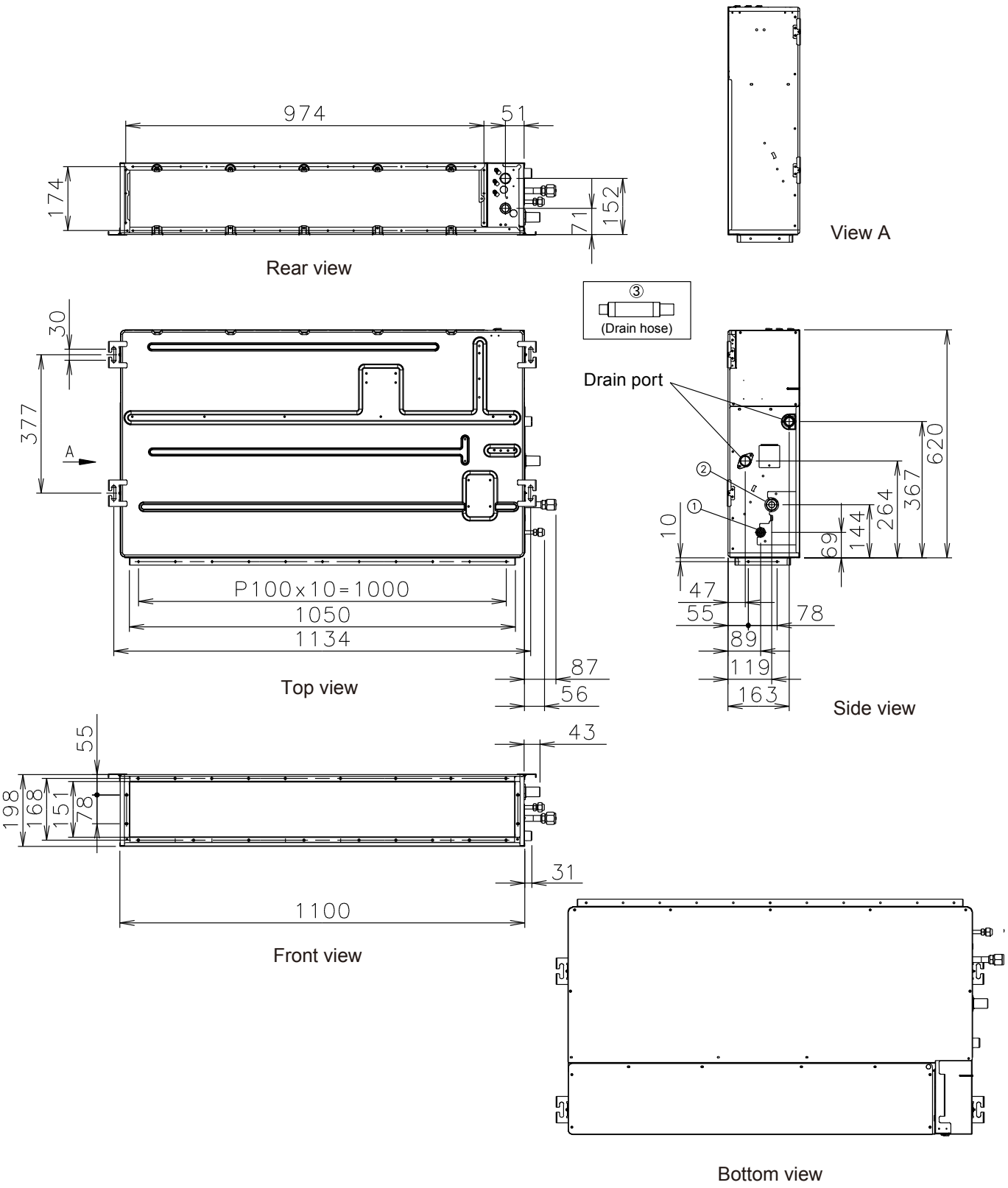

			ARXD24
①	Refrigerant pipe flare connection	Liquid	ø 9.52 mm
②		Gas	ø 15.88 mm
③	Drain hose		VP25 [ø 25mm(I.D.) ; ø 32mm(O.D.)]

■ INSTALLATION PLACE

(Unit : mm)

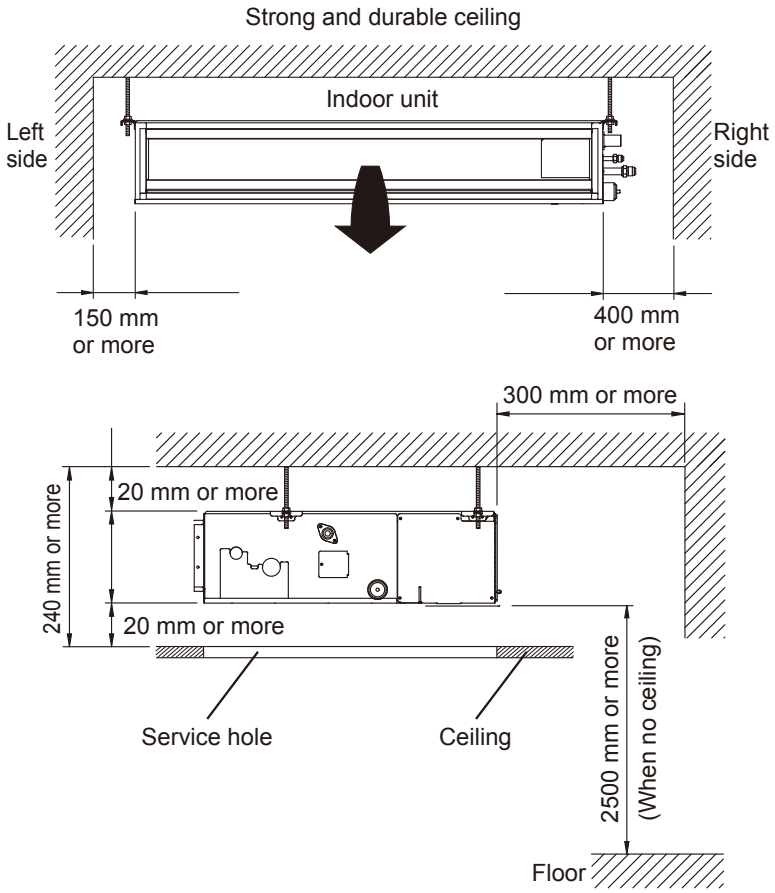

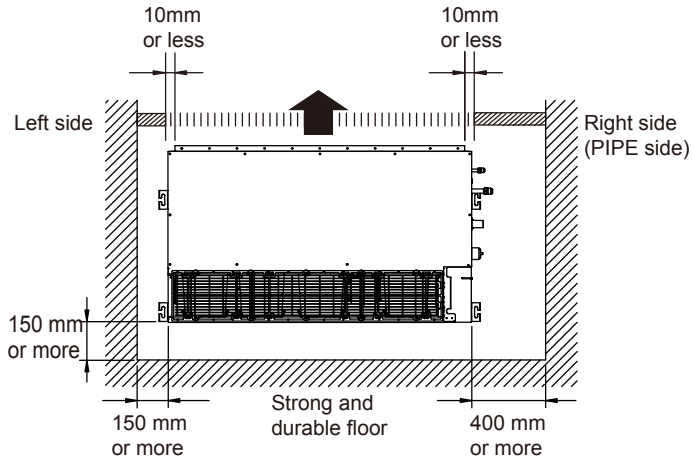

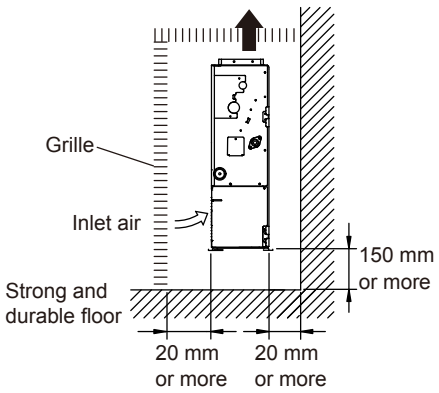

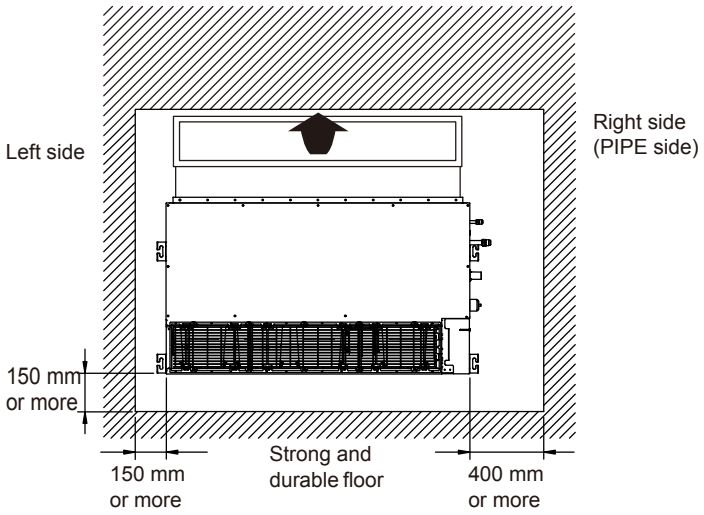

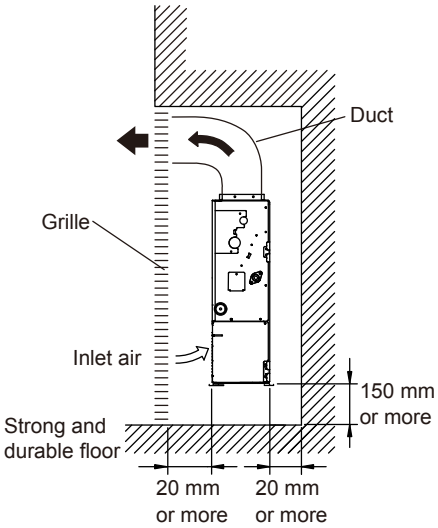

■ MAINTENANCE SPACE

Provide a service access for inspection purposes as shown below.
Do not place any wiring or illumination in the service space, as they will impede service.

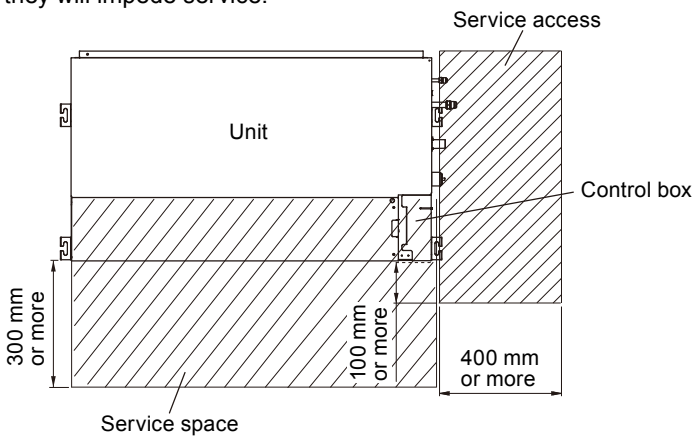

INDOOR UNITS

4-5. MEDIUM STATIC PRESSURE DUCT TYPE

■ MODELS : ARXA24GBLH, ARXA30GBLH, ARXA36GBLH, ARXA45GBLH

(Unit : mm)

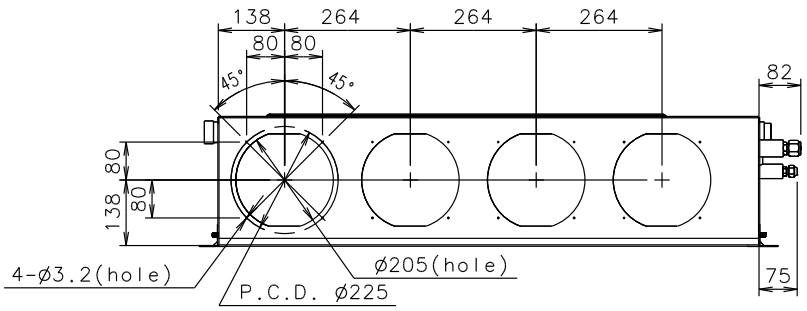

Front view

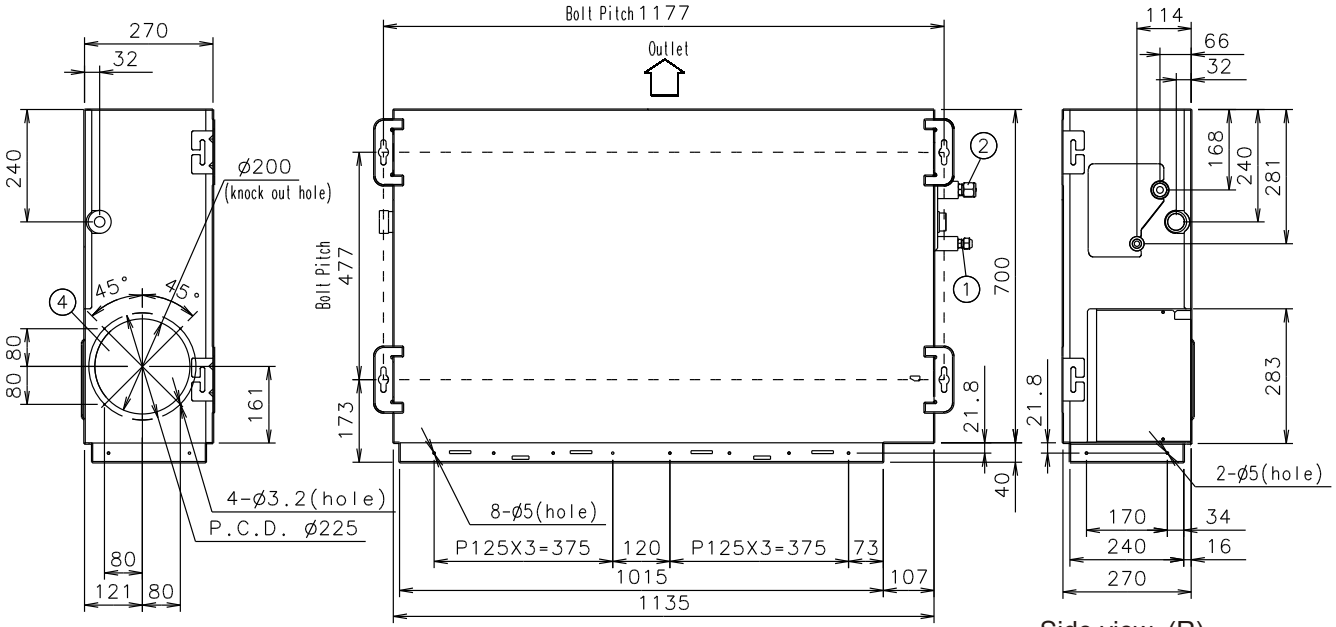

Side view (L)

Top view

Side view (R)

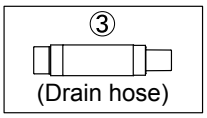

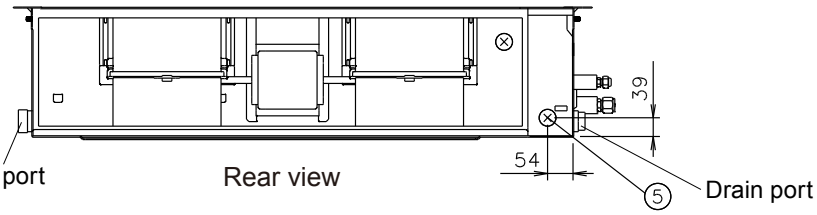

Rear view

			ARXA24, ARXA30	ARXA36, ARXA45
①	Refrigerant pipe flare connection	Liquid	ø 9.52 mm	ø 9.52 mm
②		Gas	ø 15.88 mm	ø 19.05 mm
③	Drain hose		VP25 [ø 25mm(I.D.) ; ø 32mm(O.D.)]	
④	Knock out hole (fresh air)		200 mm	
⑤	Hole for power cable		23 mm	

INDOOR UNITS

■ INSTALLATION PLACE ∗1

(Unit : mm)

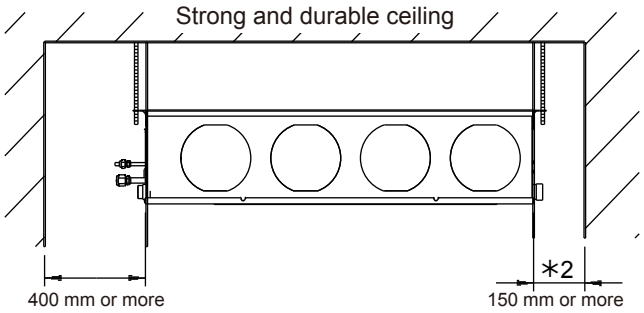

∗1 When drain pump is used, leave the space required for service and maintenance

∗2 When drain hose is connected, the required dimension is 400mm or more.

■ MAINTENANCE SPACE

For accessibility to install and remove the control box.

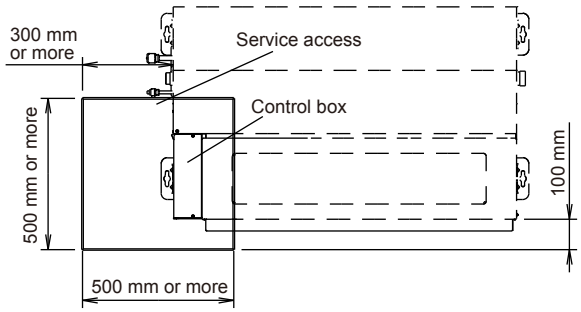

For accessibility to install and remove the control box, fan units and filter.

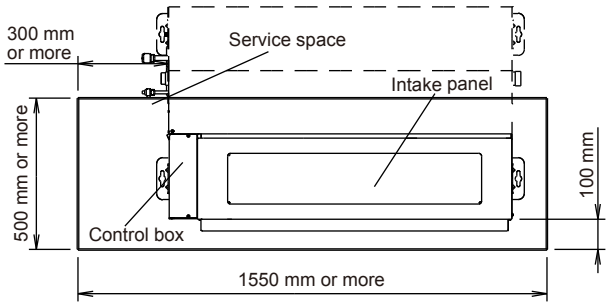

■ WHEN USING A SQUARE DUCT

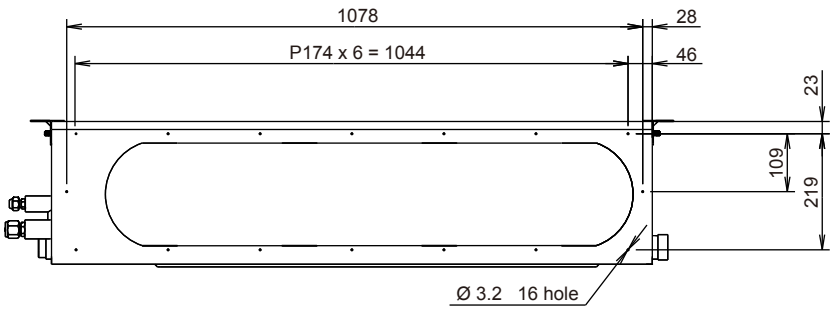

4-6. HIGH STATIC PRESSURE DUCT TYPE

■ MODELS : ARXC36GATH, ARXC45GATH, ARXC60GATH

(Unit : mm)

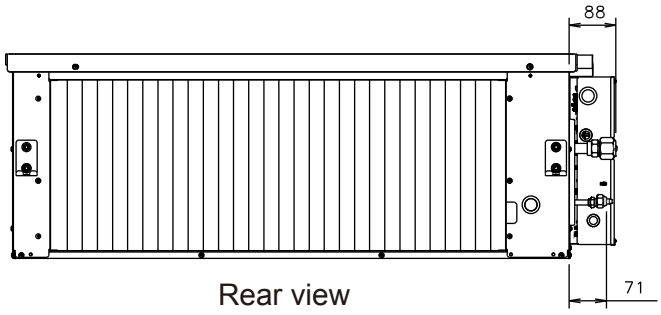

Rear view

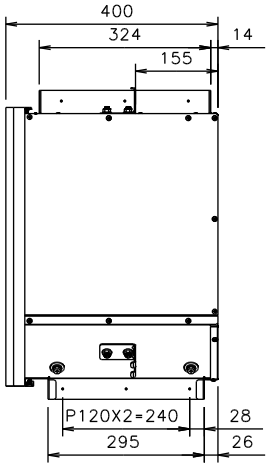

Side view (L)

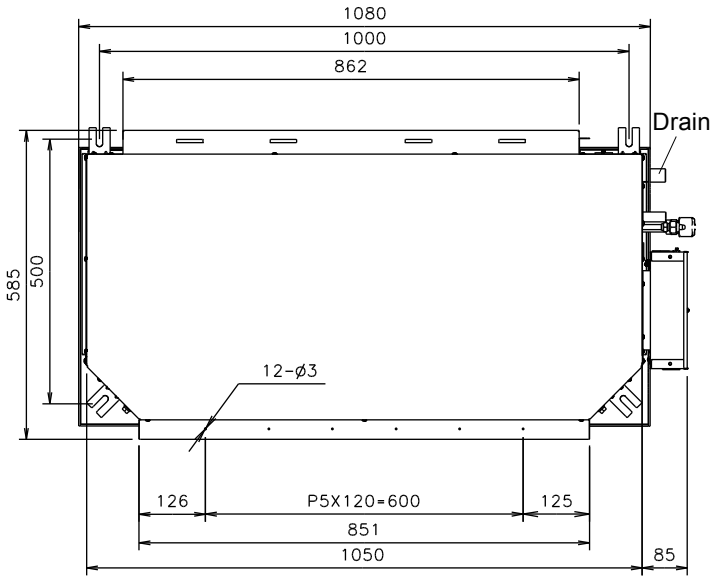

Top view

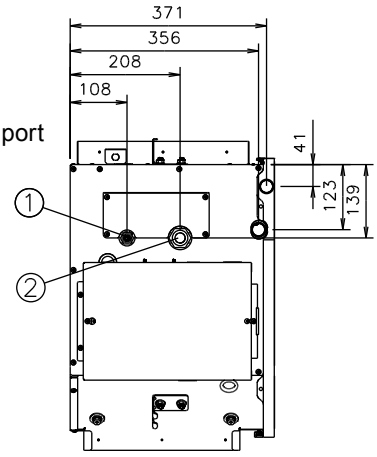

Side view (R)

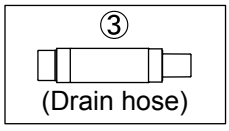

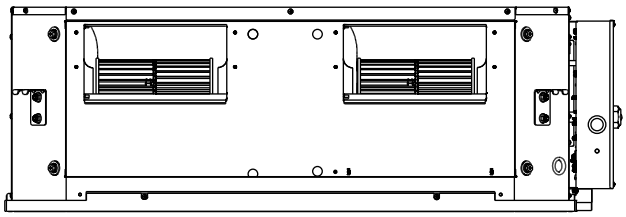

Front view

			ARXC36, ARXC45, ARXC60
①	Refrigerant pipe flare connection	Liquid	ø 9.52 mm
②		Gas	ø 19.05 mm
③	Drain hose		VP25 [ø 25mm(I.D.) ; ø 32mm(O.D.)]

INDOOR UNITS

■ INSTALLATION PLACE

(Unit : mm)

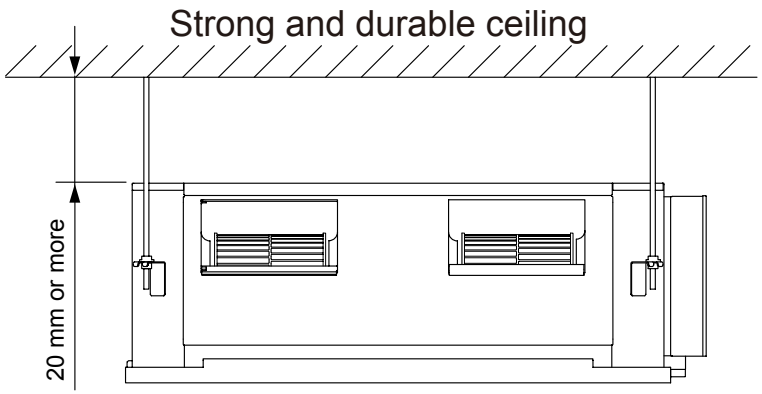

INDOOR UNITS

■ MAINTENANCE SPACE

Provide a service access for inspection purposes as shown below.
Do not place any wiring or illumination in the service space, as they will impede service.

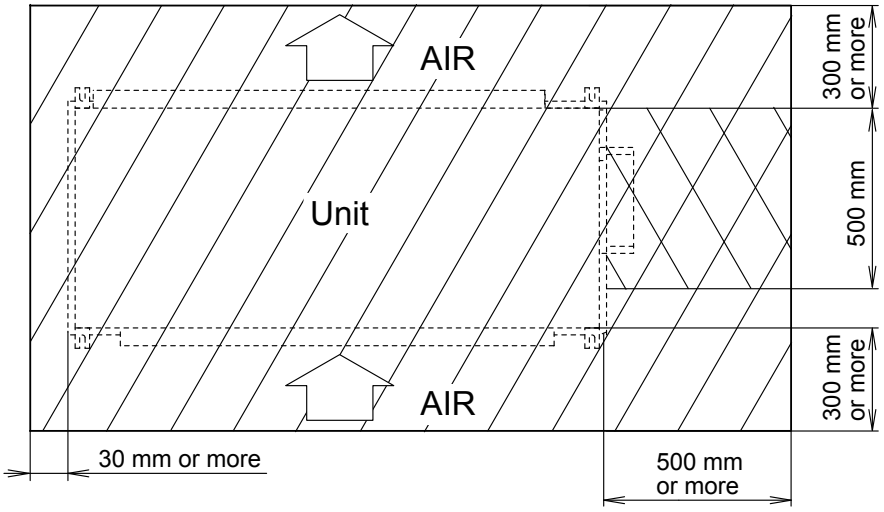

: Service access : Service space

■ MODELS : ARXC72GATH, ARXC90GATH

(Unit : mm)

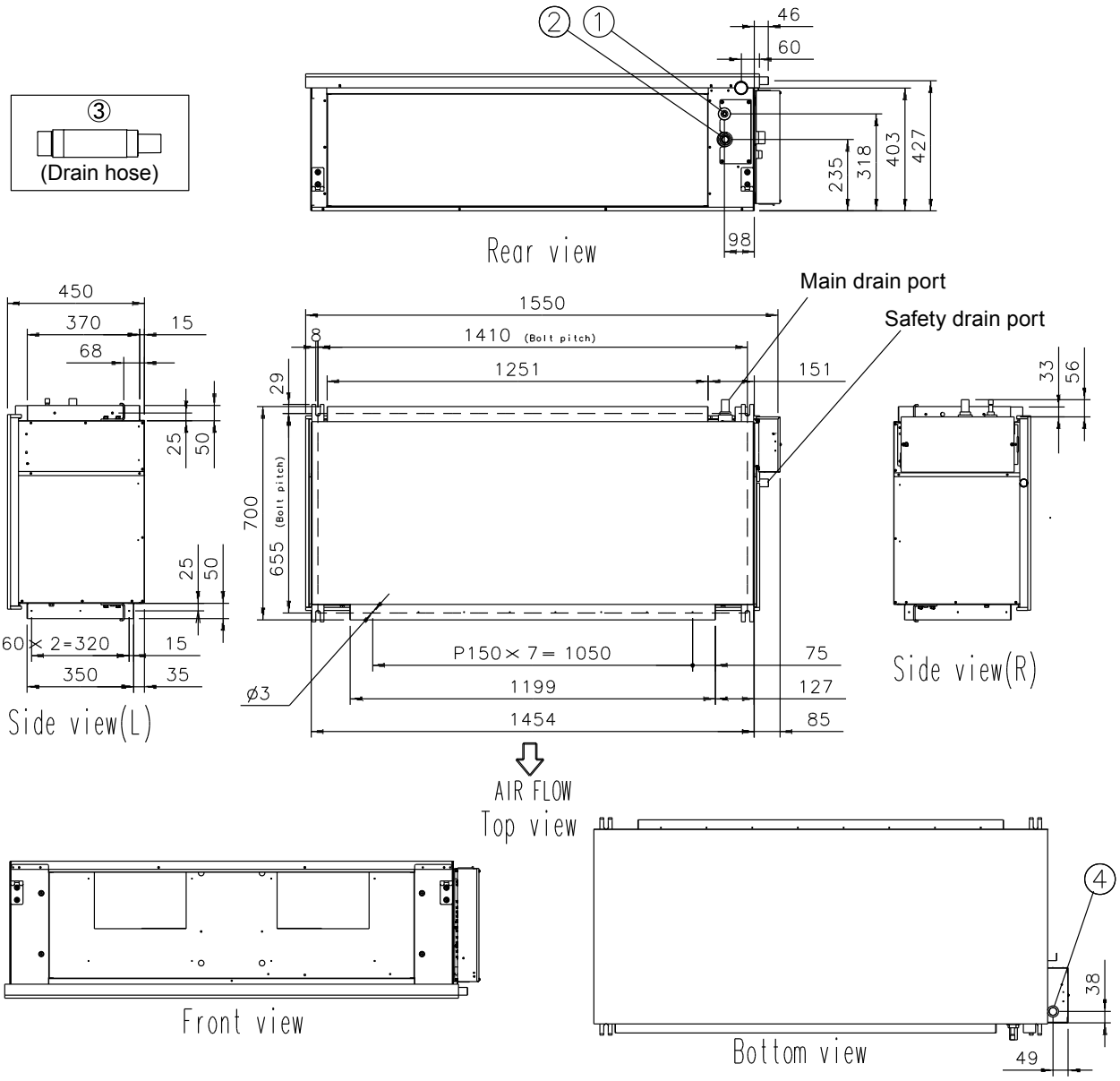

			ARXC72, ARXC90
①	Refrigerant pipe flare connection	Liquid	ø 12.70 mm
②		Gas	ø 22.22 mm
③	Drain hose		VP25 [ø 25mm(I.D.) ; ø 32mm(O.D.)]
④	Hole for power cable		25 mm

■ INSTALLATION PLACE

If the service space shown in the left is unavailable, provide a 900mm service space at either the left or right side of the unit.

(Unit : mm)

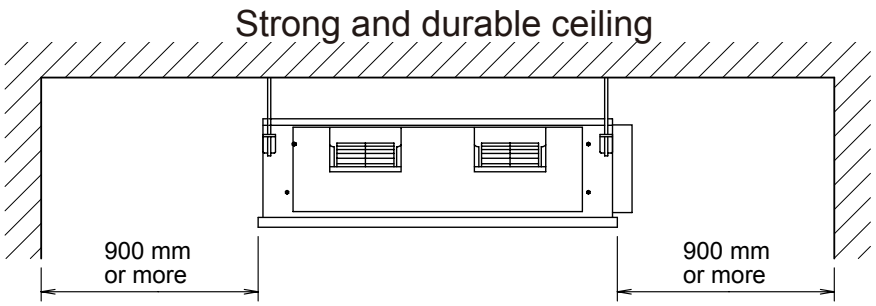

INDOOR UNITS

■ MAINTENANCE SPACE

Provide a service access for inspection purposes as shown below.
Do not place any wiring or illumination in the service space, as they will impede service.

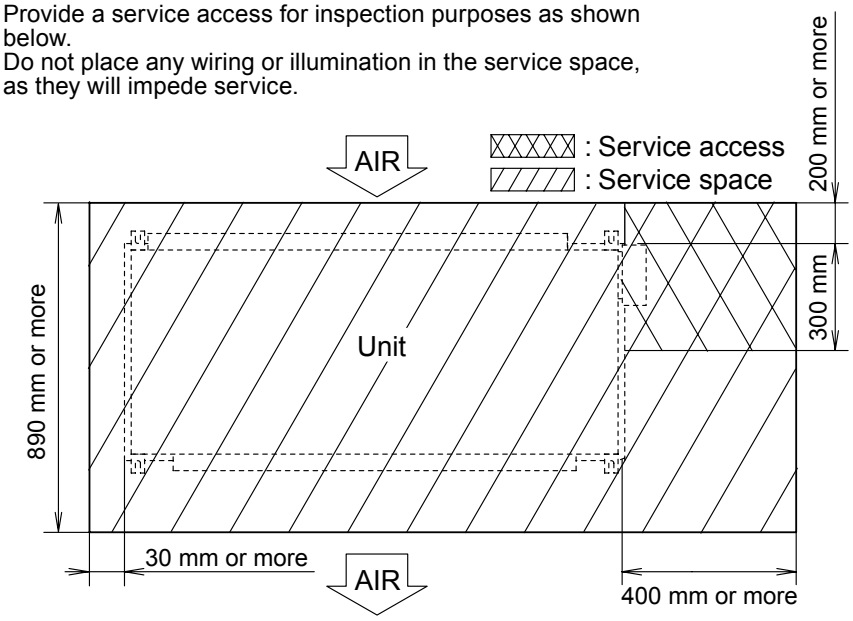

4-7. FLOOR / CEILING TYPE

■ MODELS : AB∗A12GATH, AB∗A14GATH, AB∗A18GATH, AB∗A24GATH

(Unit : mm)

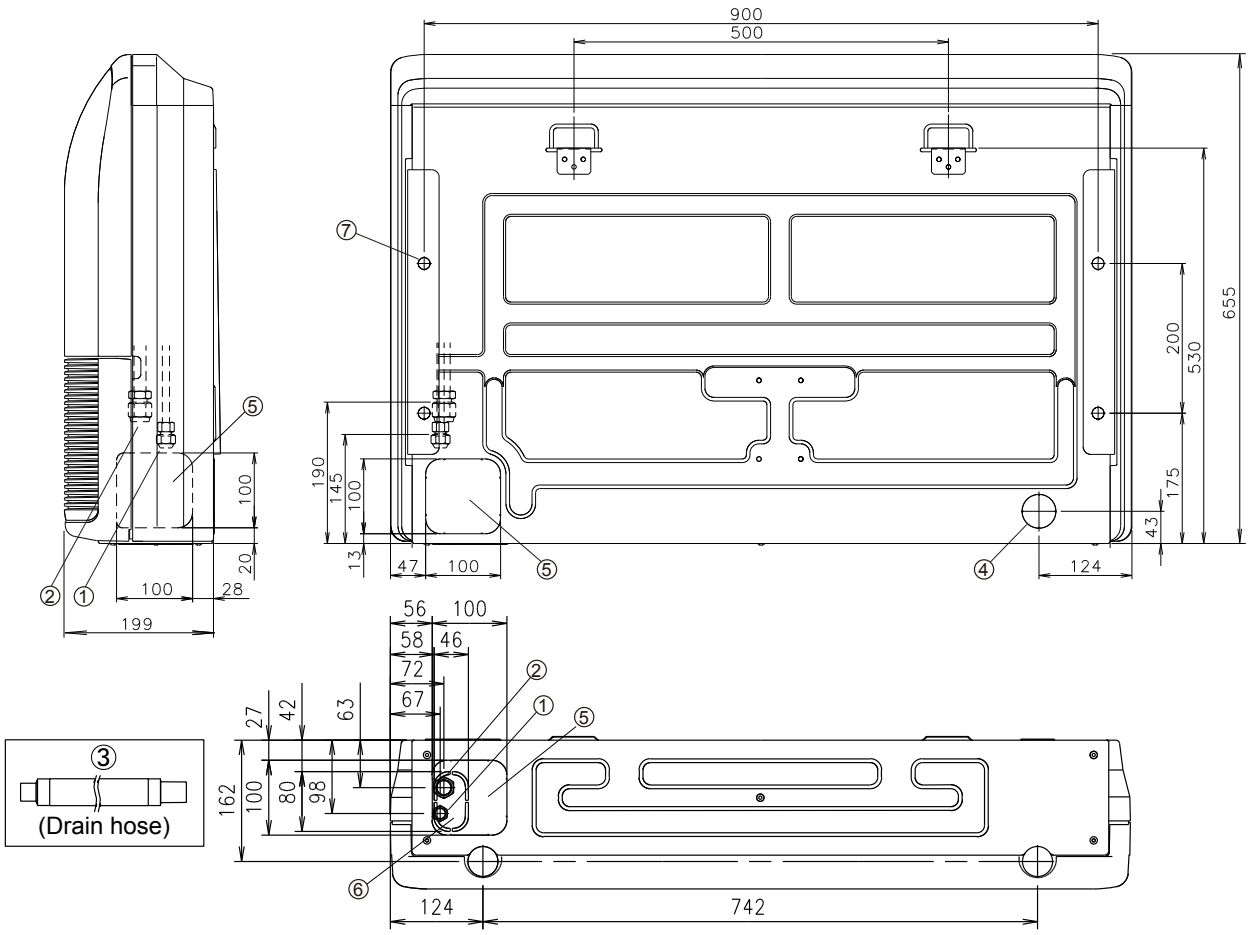

			AB∗A12, AB∗A14	AB∗A18, AB∗A24
①	Refrigerant pipe flare connection	Liquid	ø 6.35 mm	ø 9.52 mm
②		Gas	ø 12.70 mm	ø 15.88 mm
③	Drain hose		VP25 [ø 25mm(I.D.) ; ø 32mm(O.D.)]	
④	Knock out hole	Drain outlet	ø 45 mm	
⑤⑥		-	-	
⑦	Hole for lifting bolt		Use M10 screw bolt	

INDOOR UNITS

■ INSTALLATION PLACE

(Unit : mm)

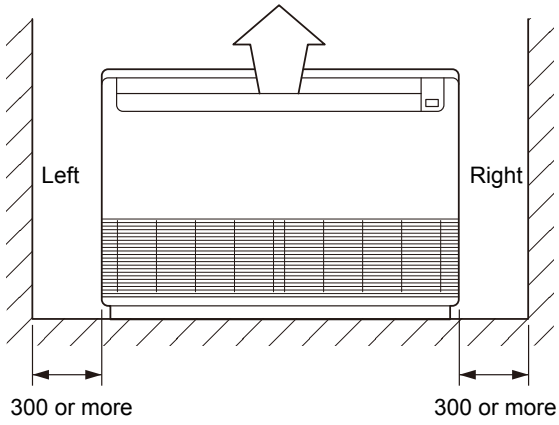

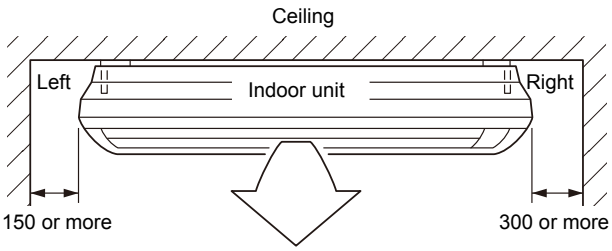

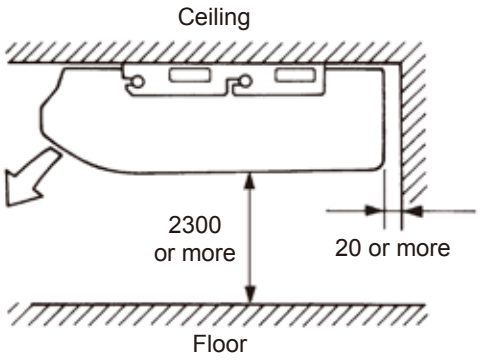

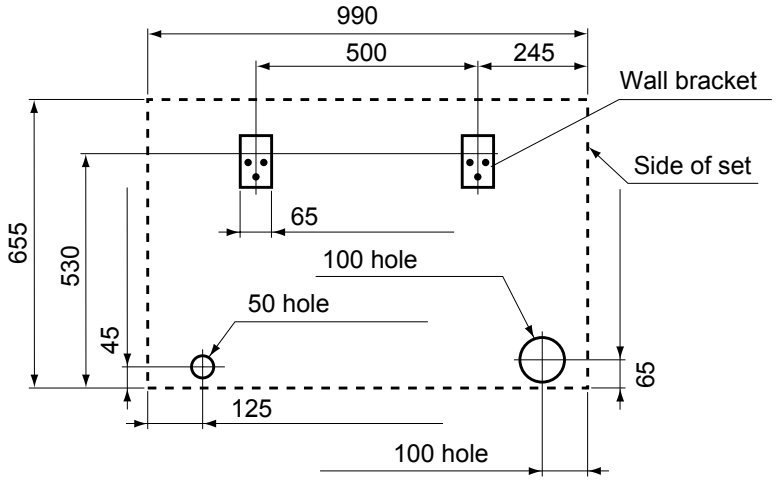

INDOOR UNITS

4-8. CEILING TYPE

■ MODELS : AB∗A30GATH, AB∗A36GATH, AB∗A45GATH, AB∗A54GATH

(Unit : mm)

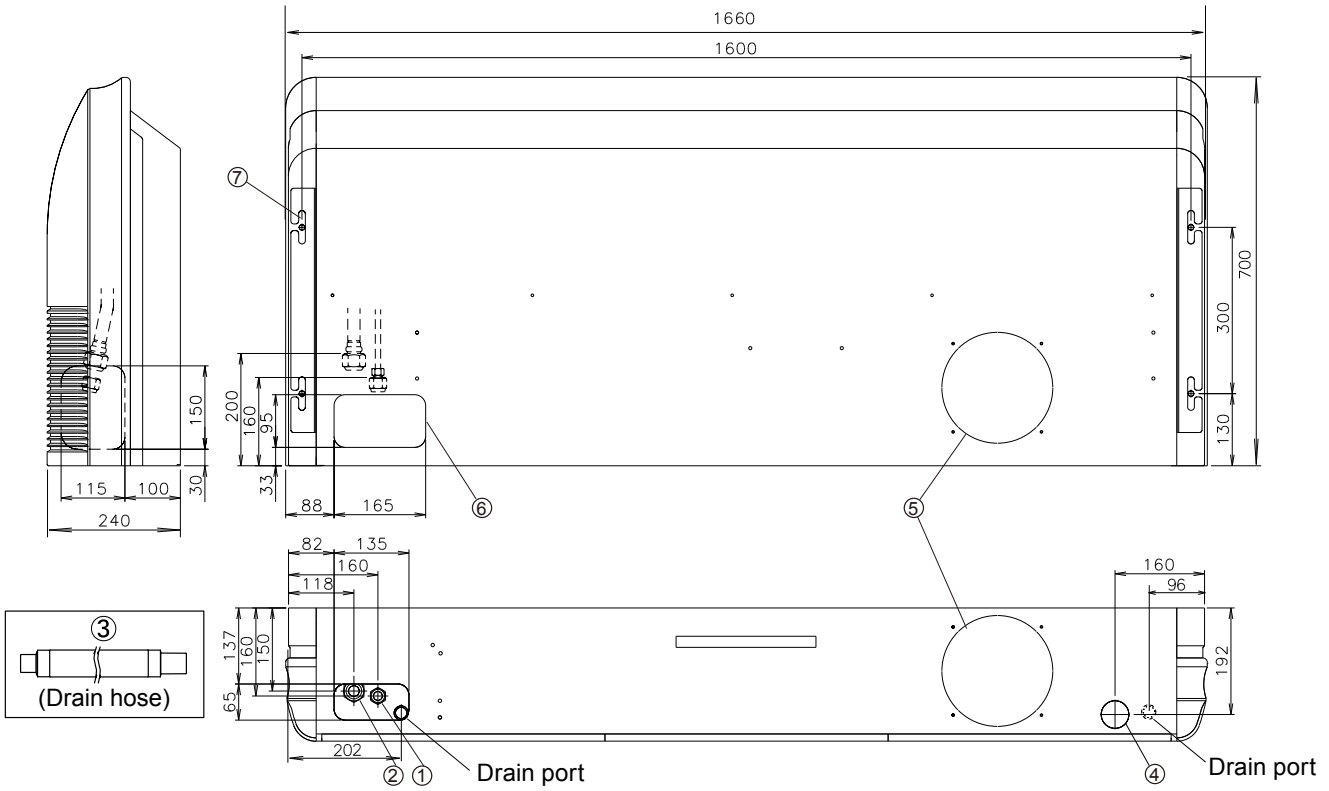

			AB∗A30	AB∗A36, AB∗A45, AB∗A54
①	Refrigerant pipe flare connection	Liquid	ø 9.52 mm	ø 9.52 mm
②		Gas	ø 15.88 mm	ø 19.05 mm
③	Drain hose		VP25 [ø 25mm(I.D.) ; ø 32mm(O.D.)]	
④	Knock out hole	Drain outlet	ø 50 mm	
⑤		Fresh air	ø 200 mm	
⑥		Refrigerant pipe	-	
⑦	Hole for lifting bolt		Use M10 screw bolt	

INDOOR UNITS

■ INSTALLATION PLACE

(Unit : mm)

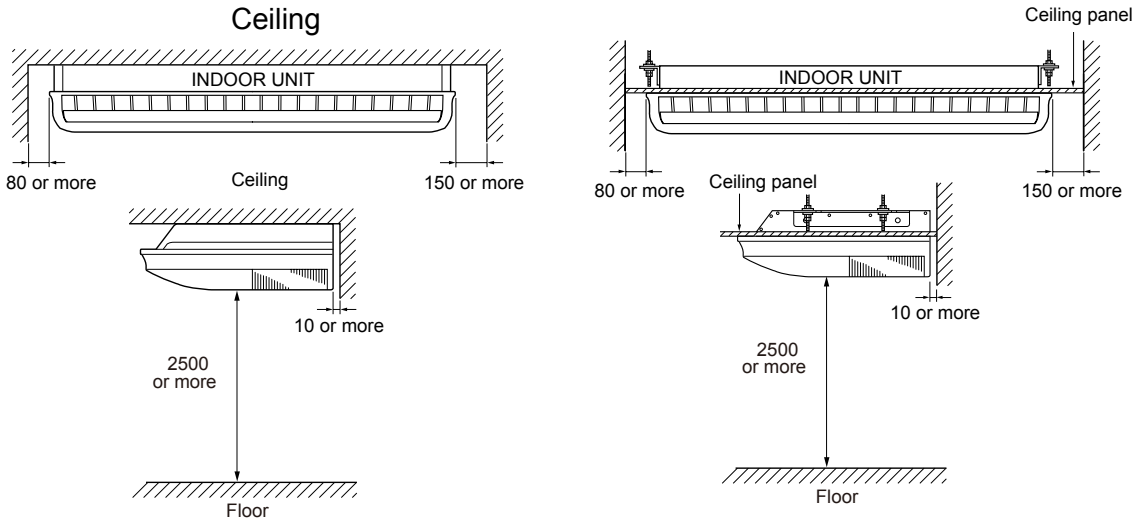

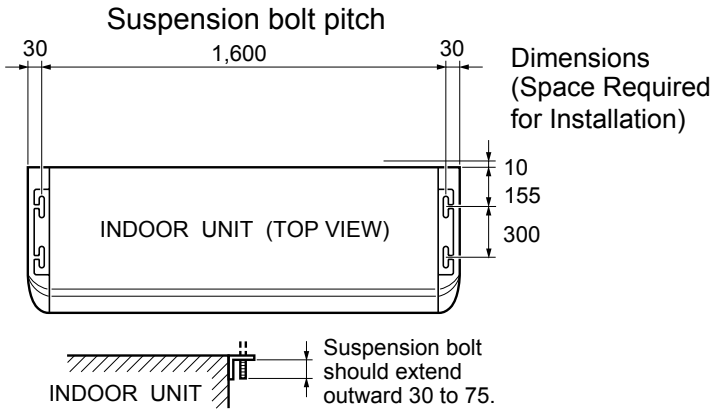

INDOOR UNITS

4-9. WALL MOUNTED TYPE

■ MODELS : AS∗A04GACH, AS∗A07GACH, AS∗A09GACH, AS∗A12GACH, AS∗A14GACH

4-10. WALL MOUNTED TYPE (EEV external model)

■ MODELS : AS∗E04GACH, AS∗E07GACH, AS∗E09GACH, AS∗E12GACH, AS∗E14GACH

(Unit : mm)

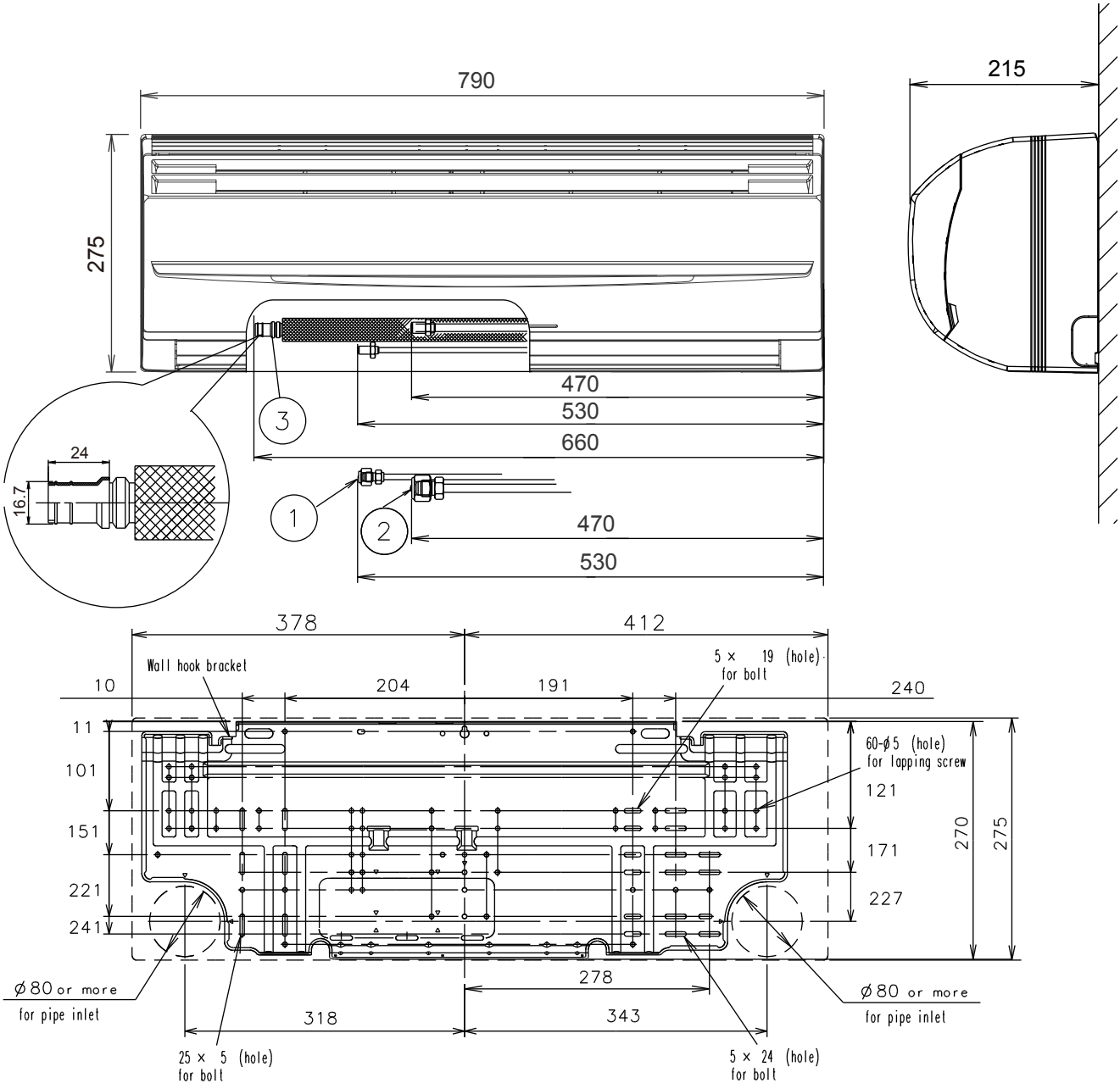

			AS∗A04, AS∗A07, AS∗A09, AS∗A12, AS∗A14 AS∗E04, AS∗E07, AS∗E09, AS∗E12, AS∗E14
①	Refrigerant pipe flare connection	Liquid	ø 6.35 mm
②		Gas	ø 12.70 mm
③	Drain hose		I.D. 13.8 mm , O.D. 15.8-16.7 mm Drain hose : L=600mm

■ INSTALLATION PLACE

(Unit : mm)

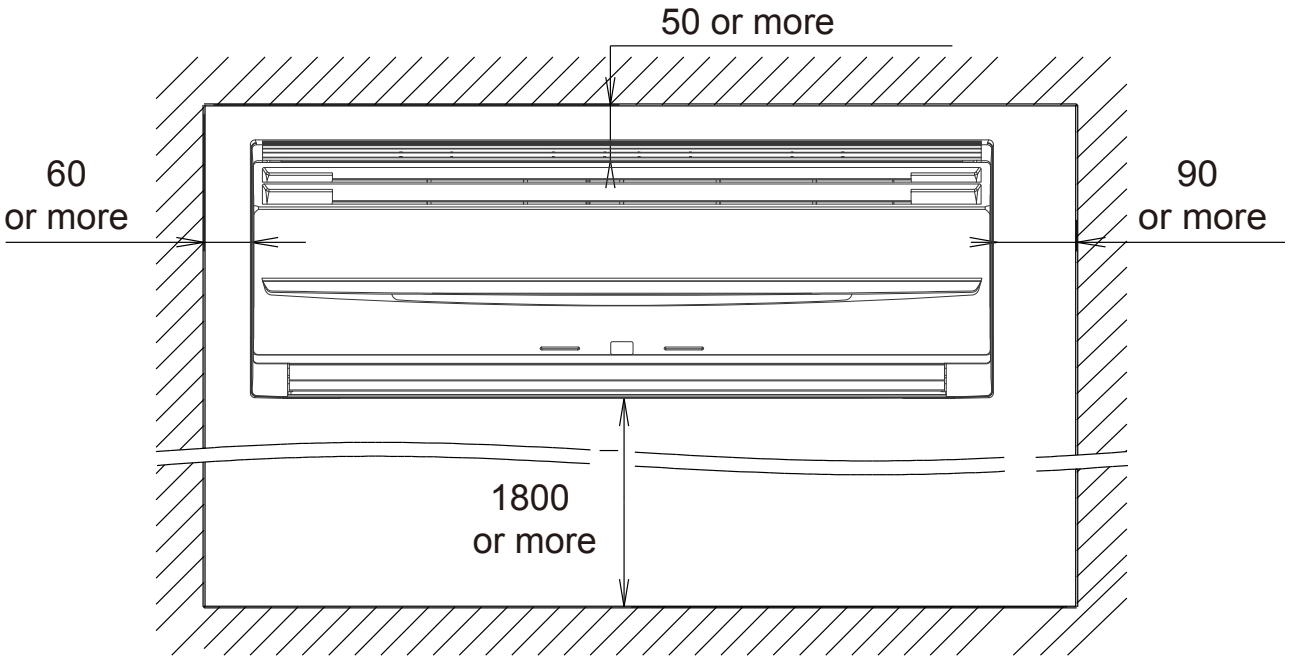

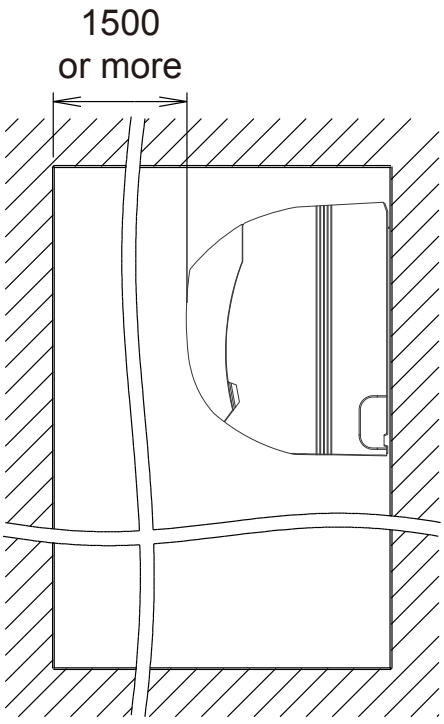

INDOOR UNITS

4-11. WALL MOUNTED TYPE

■ MODELS : AS∗A18GACH, AS∗A24GACH, AS∗A30GACH

(Unit : mm)

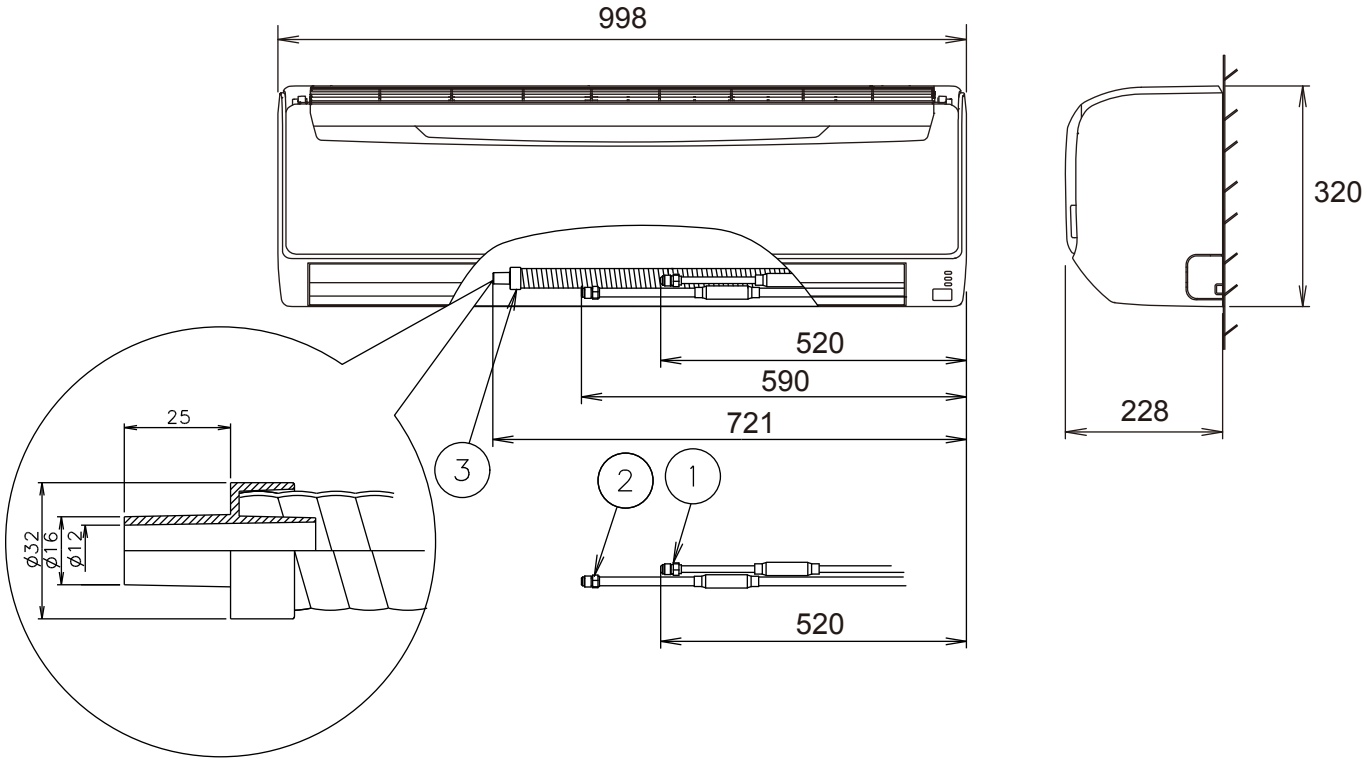

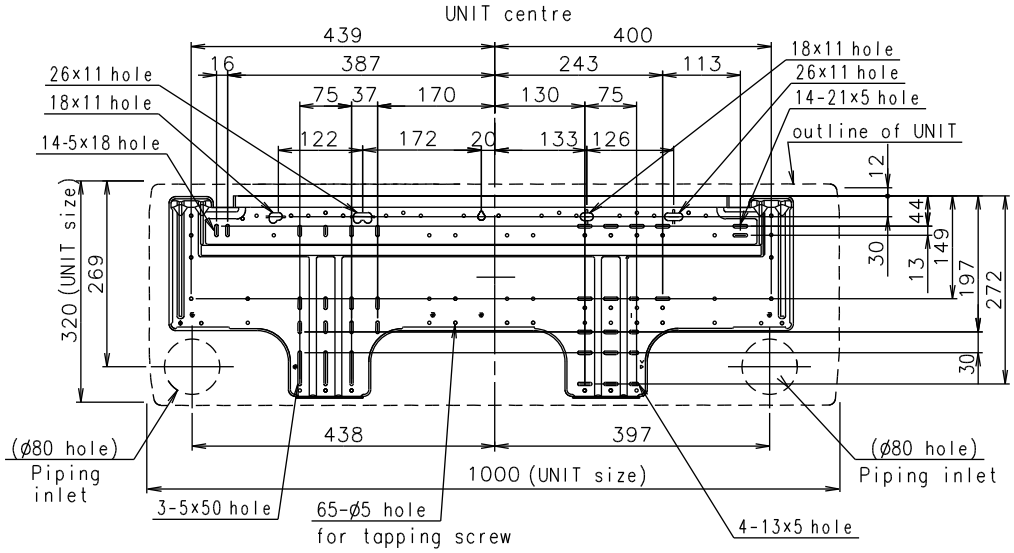

			AS∗A18, AS∗A24, AS∗A30
①	Refrigerant pipe flare connection	Liquid	ø 9.52 mm
②		Gas	ø 15.88 mm
③	Drain hose		I.D. 12 mm , O.D. 16 mm Drain hose : L=670mm

INDOOR UNITS

■ INSTALLATION PLACE

(Unit : mm)

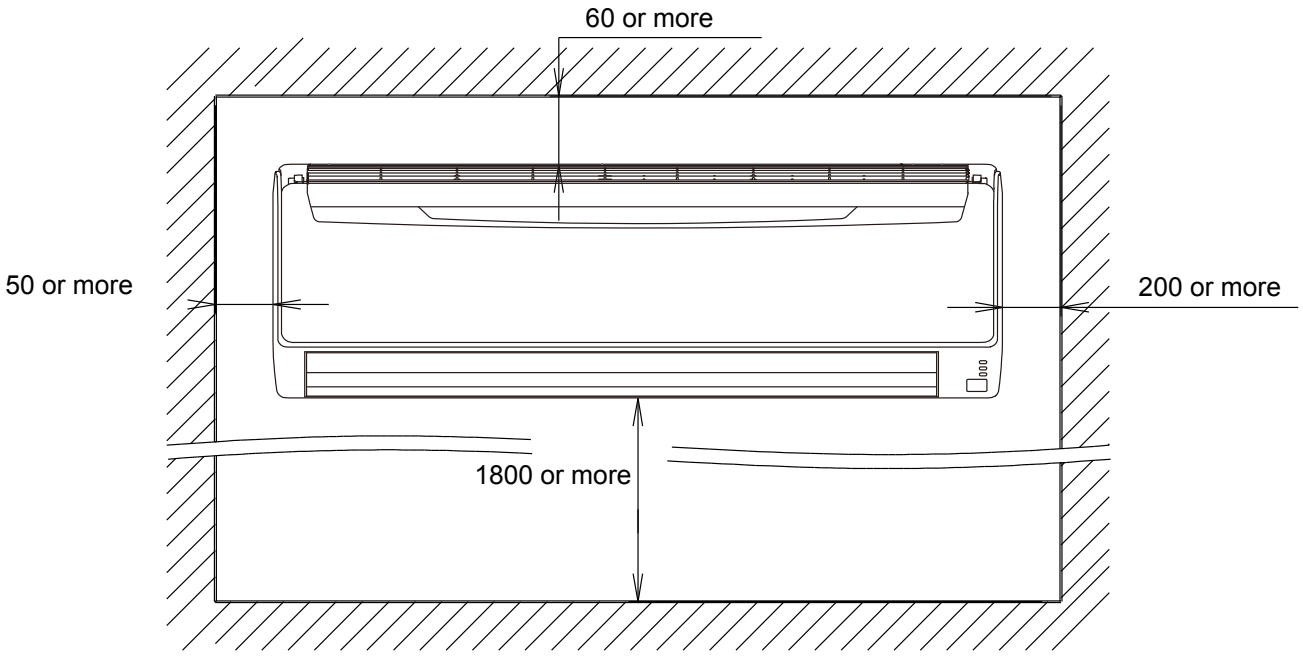

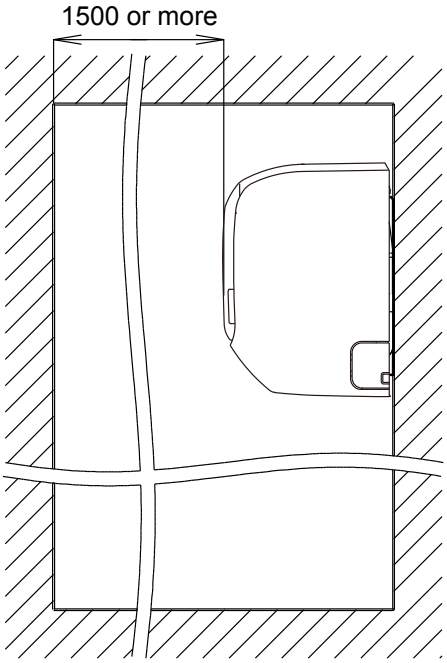

INDOOR UNITS

5. WIRING DIAGRAMS

5-1. COMPACT CASSETTE TYPE

■ MODELS : AUXB04GALH, AUXB07GALH, AUXB09GALH, AUXB12GALH, AUXB14GALH, AUXB18GALH, AUXB24GALH

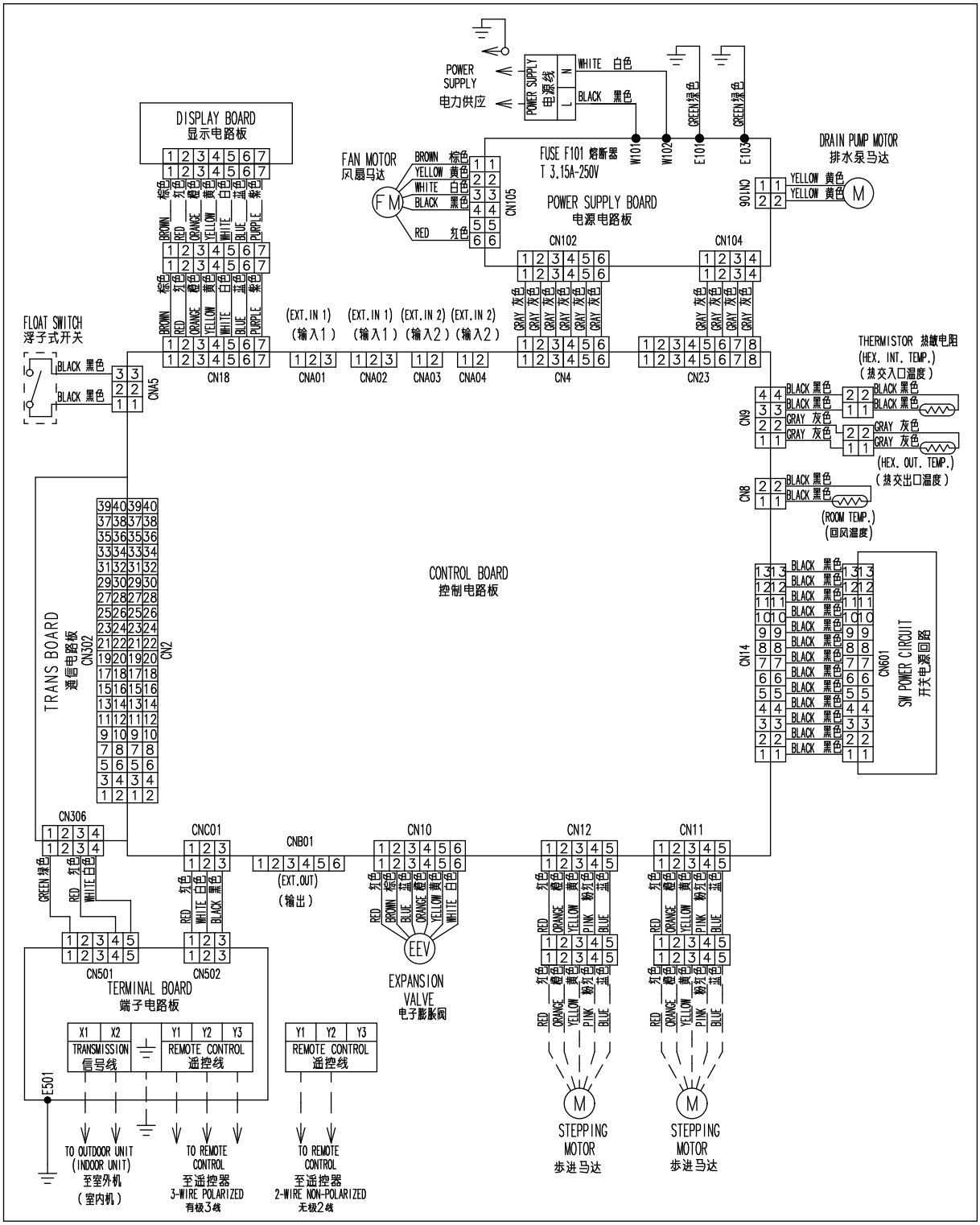

5-2. CASSETTE TYPE

■ MODELS : AUXD18GALH, AUXD24GALH, AUXA30GALH, AUXA36GALH, AUXA45GALH, AUXA54GALH

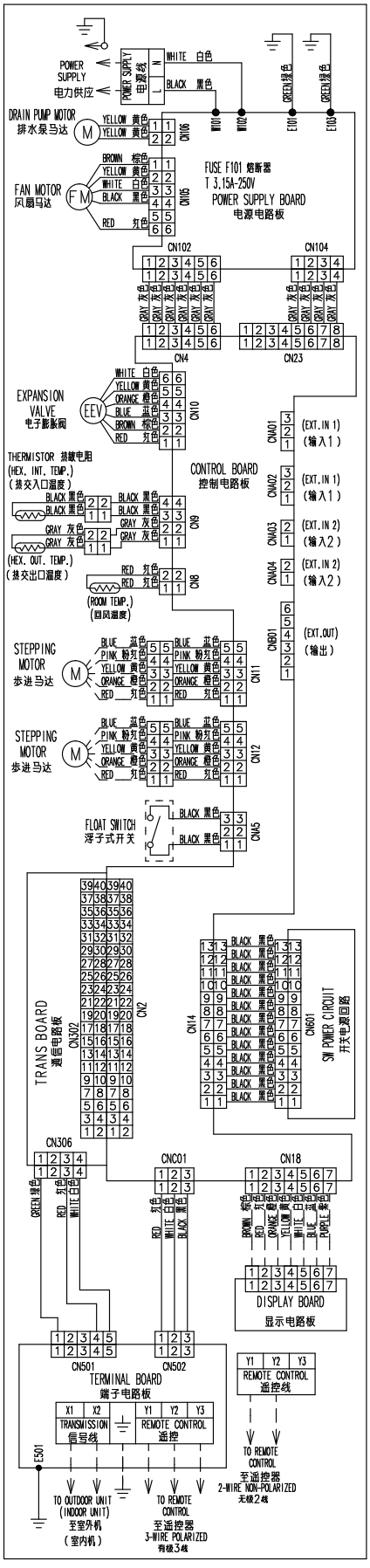

INDOOR UNITS

5-3. LOW STATIC PRESSURE DUCT / CONCEALED FLOOR TYPE

■ MODELS : ARXB07GALH, ARXB09GALH, ARXB12GALH, ARXB14GALH, ARXB18GALH

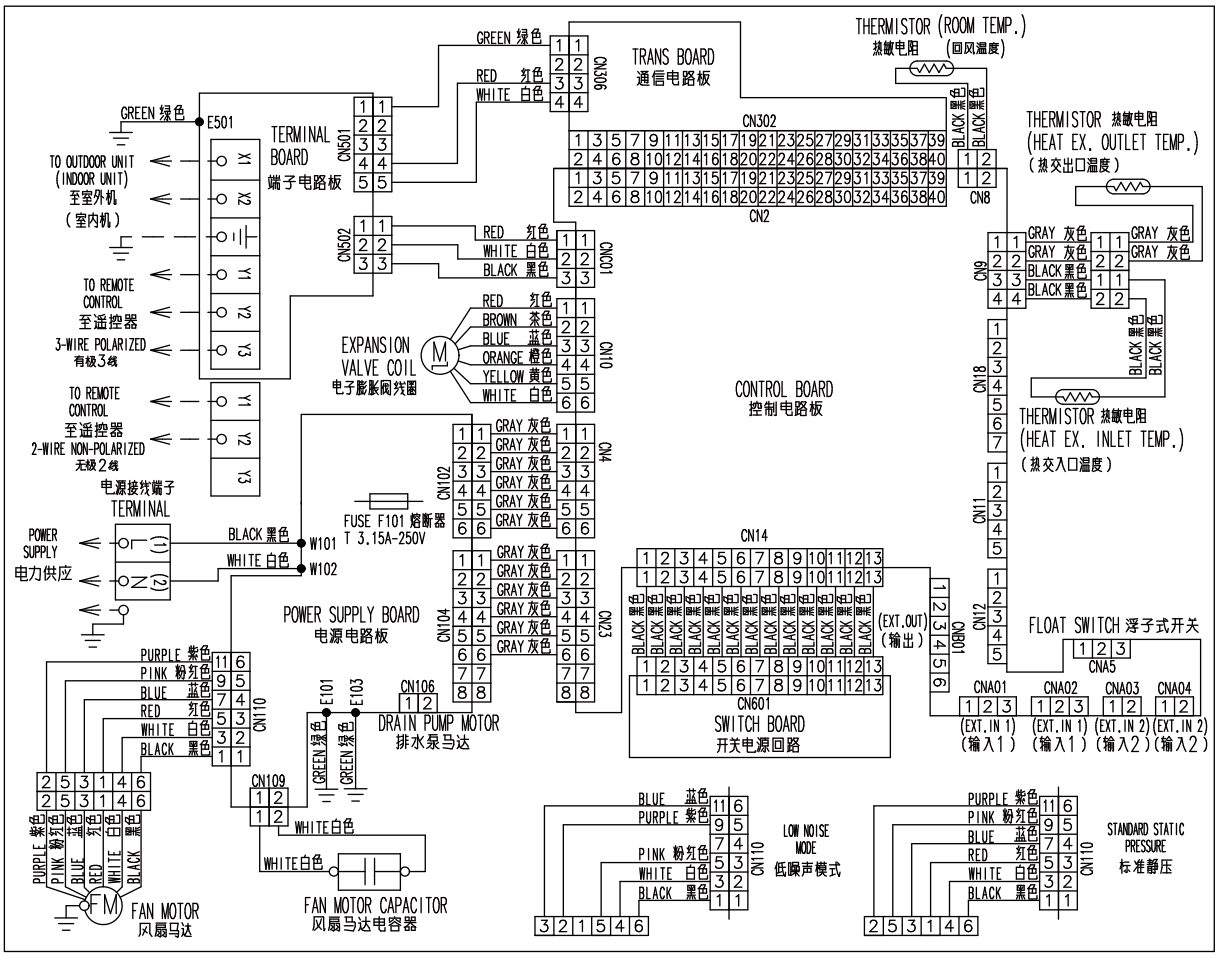

5-4. SLIM DUCT / SLIM CONCEALED FLOOR TYPE

■ MODELS : ARXD04GALH, ARXD07GALH, ARXD09GALH, ARXD12GALH, ARXD14GALH, ARXD18GALH, ARXD24GALH

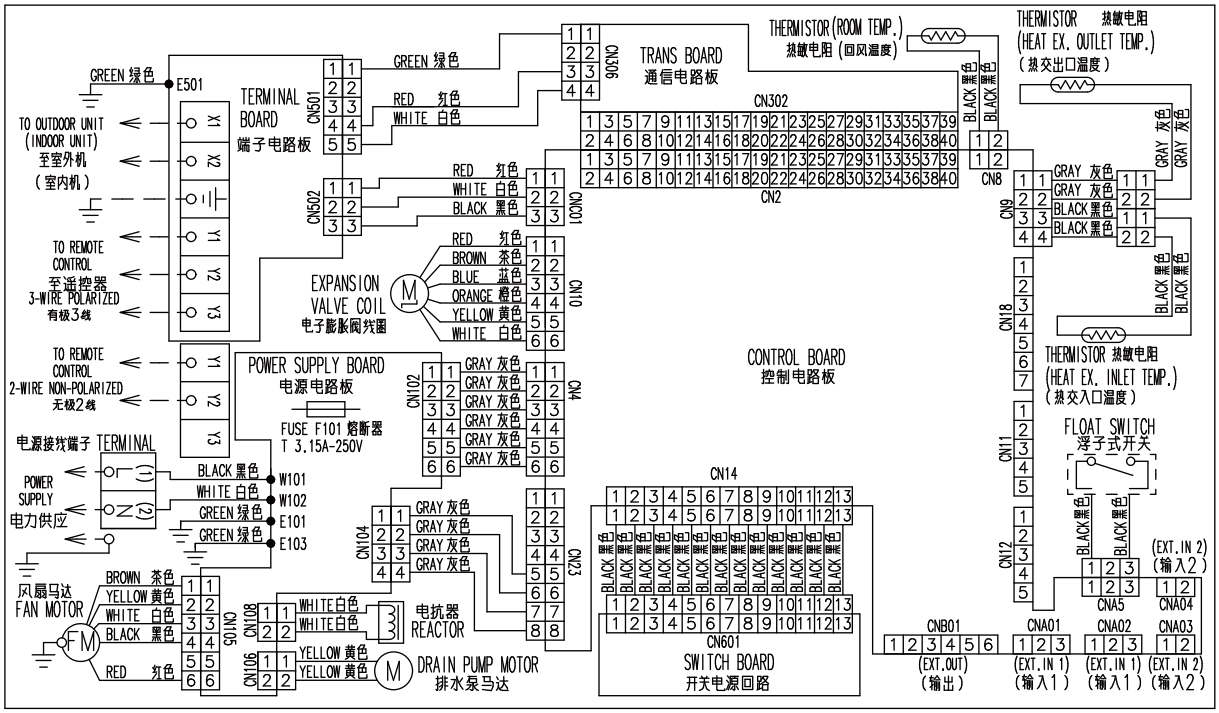

5-5. MEDIUM STATIC PRESSURE DUCT TYPE

■ MODELS : ARXA24GBLH, ARXA30GBLH, ARXA36GBLH, ARXA45GBLH

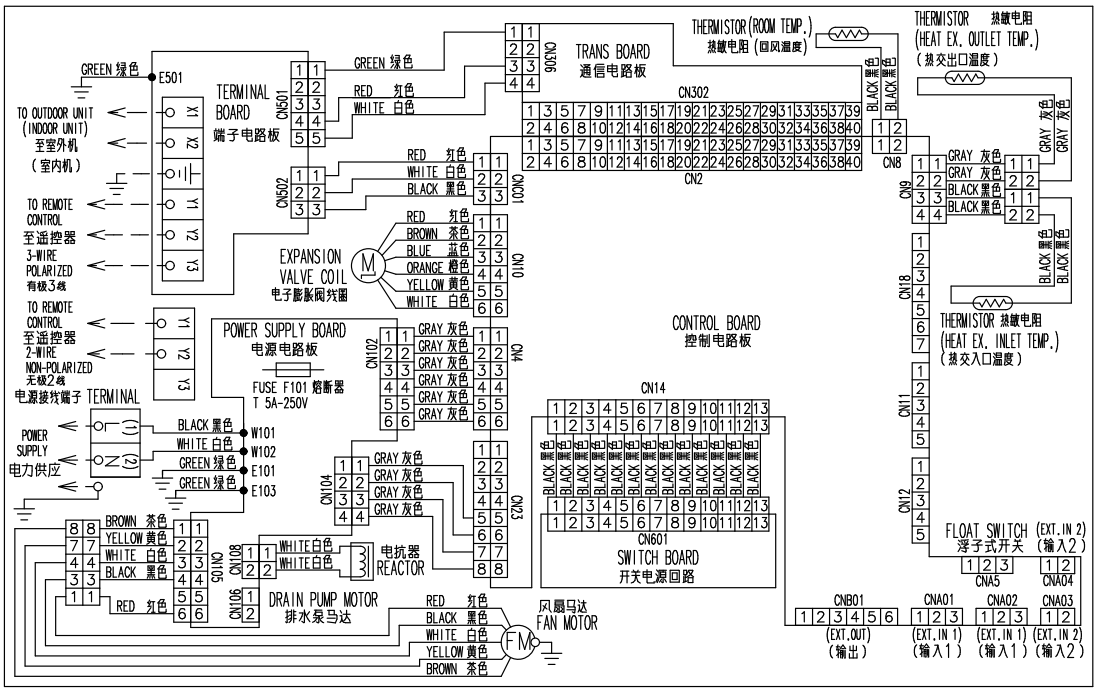

5-6. HIGH STATIC PRESSURE DUCT TYPE

■ MODELS : ARXC36GATH, ARXC45GATH, ARXC60GATH

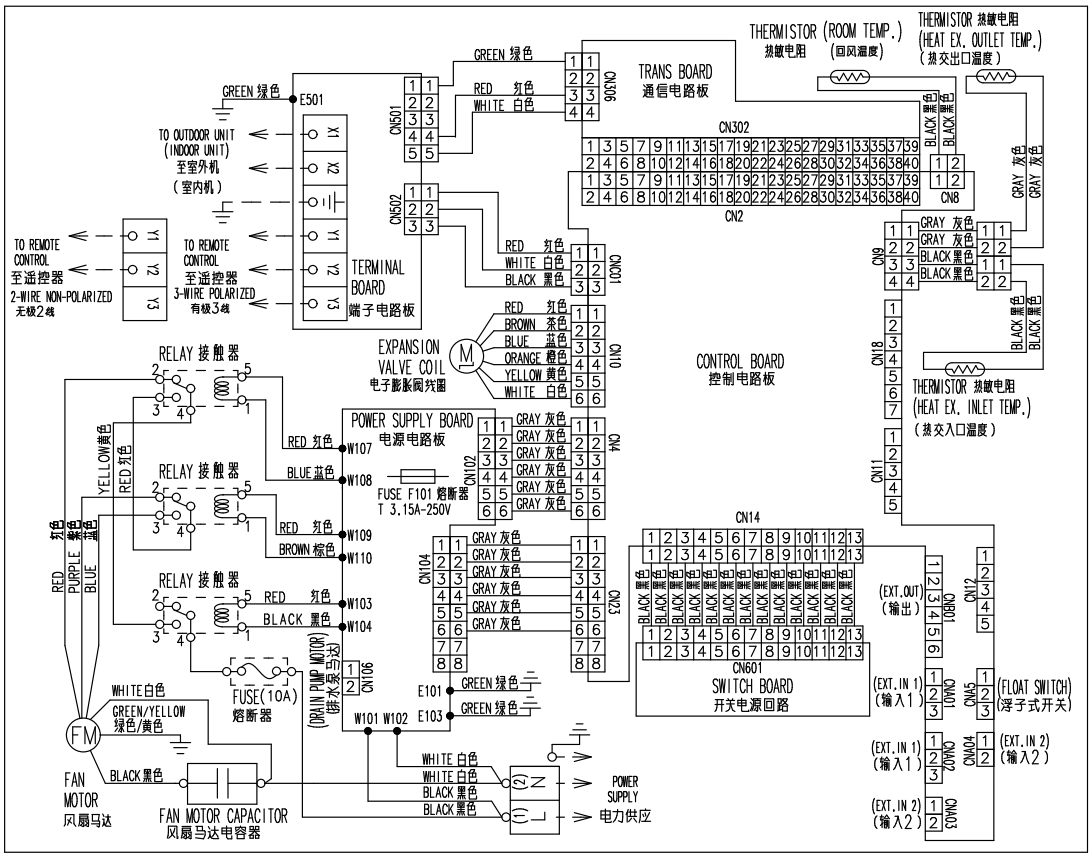

■ MODELS : ARXC72GATH, ARXC90GATH

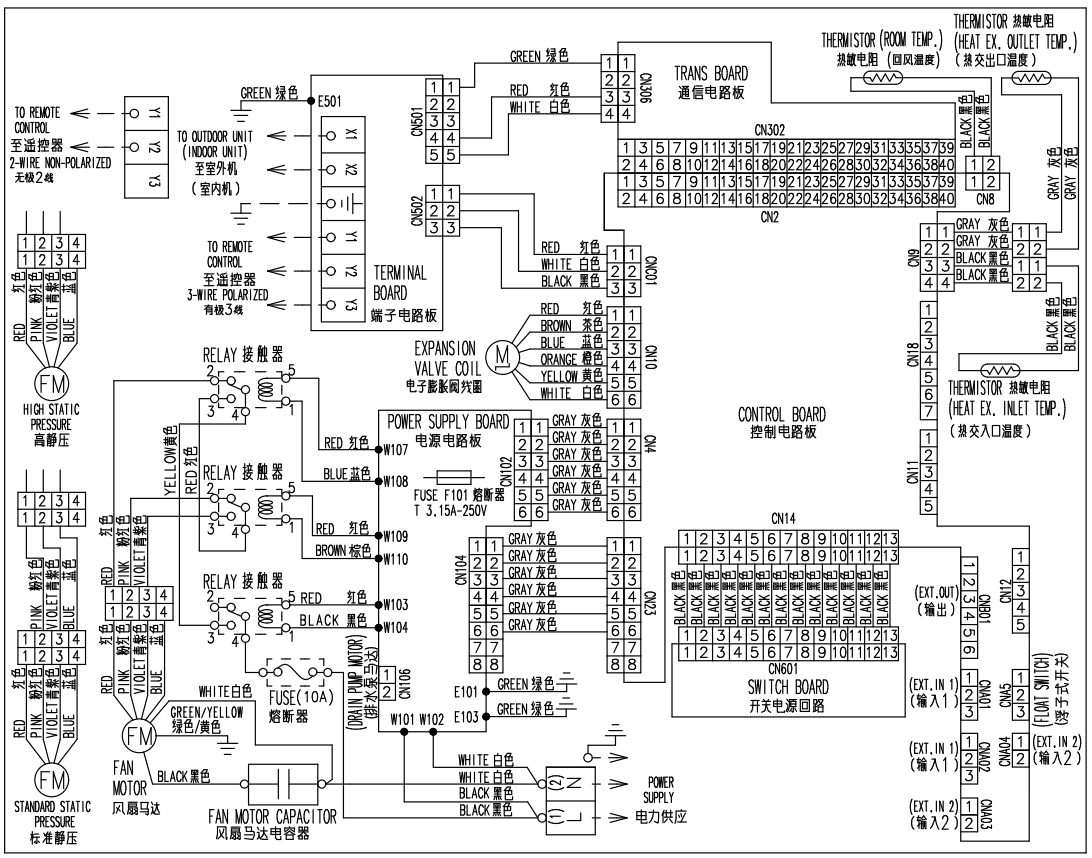

5-7. FLOOR / CEILING TYPE

■ MODELS : AB∗A12GATH, AB∗A14GATH, AB∗A18GATH, AB∗A24GATH

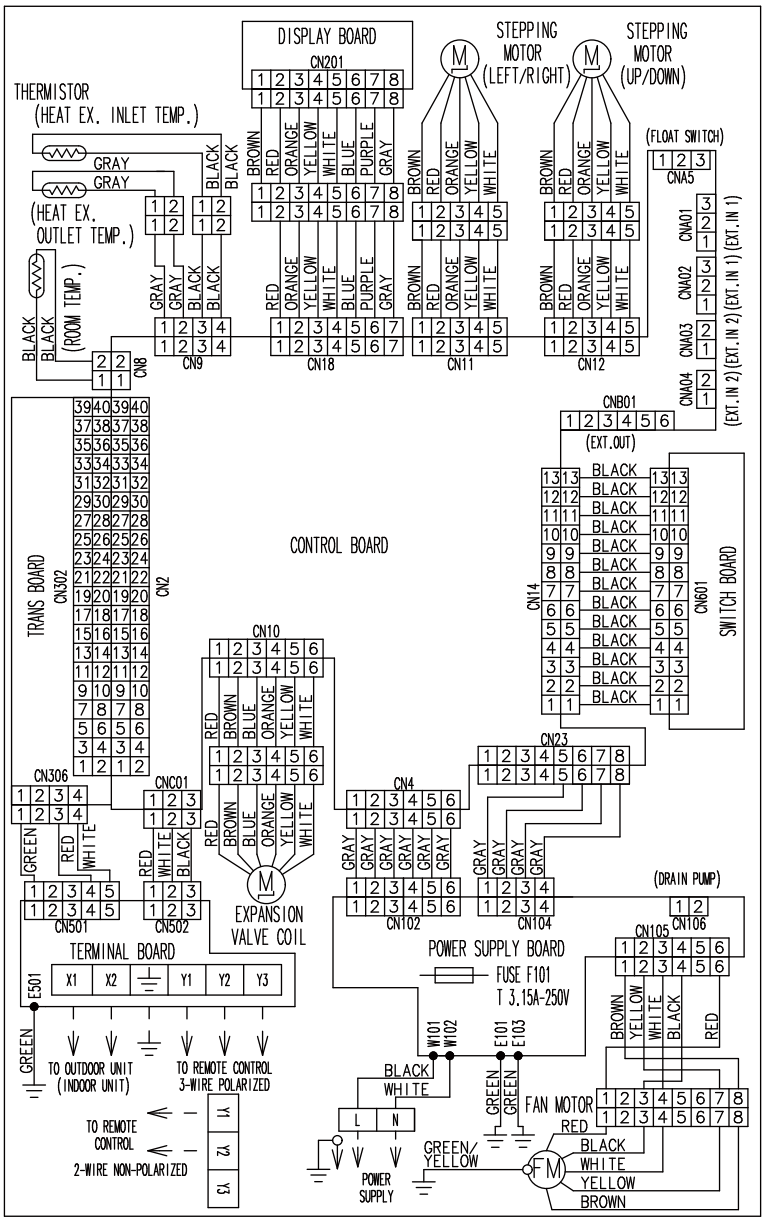

5-8. CEILING TYPE

■ MODELS : AB∗A30GATH, AB∗A36GATH, AB∗A45GATH, AB∗A54GATH

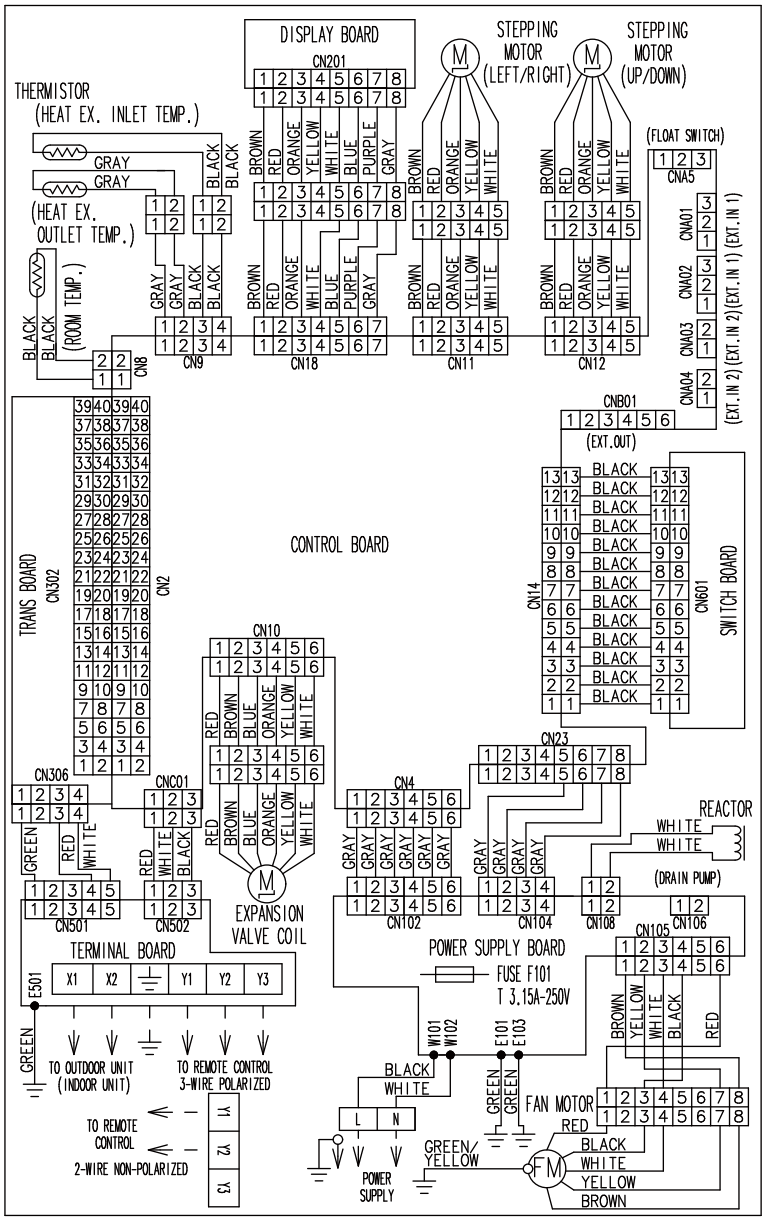

INDOOR UNITS

5-9. WALL MOUNTED TYPE

■ MODELS : AS∗A04GACH, AS∗A07GACH, AS∗A09GACH, AS∗A12GACH, AS∗A14GACH

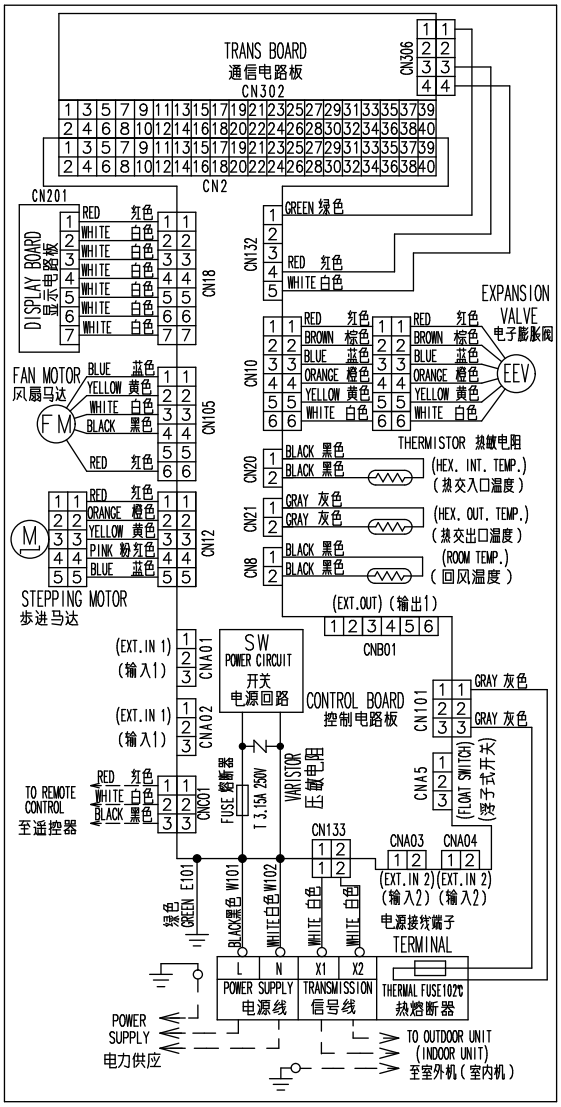

INDOOR UNITS

5-10. WALL MOUNTED TYPE (EEV external model)

■ MODELS : AS∗E04GACH, AS∗E07GACH, AS∗E09GACH, AS∗E12GACH, AS∗E14GACH

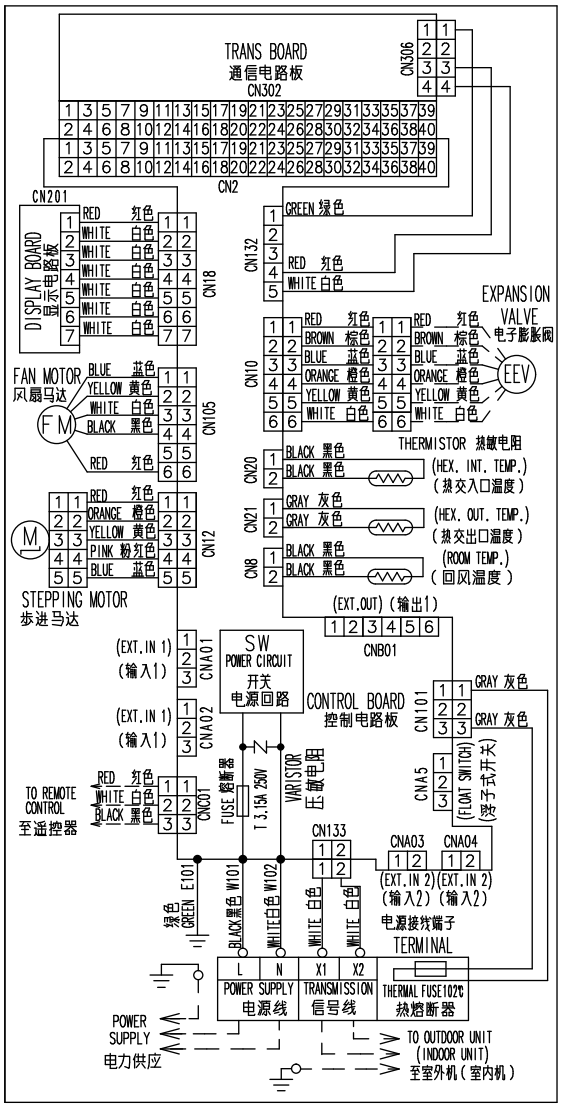

INDOOR UNITS

5-11. WALL MOUNTED TYPE

■ MODELS : AS∗A18GACH, AS∗A24GACH, AS∗A30GACH

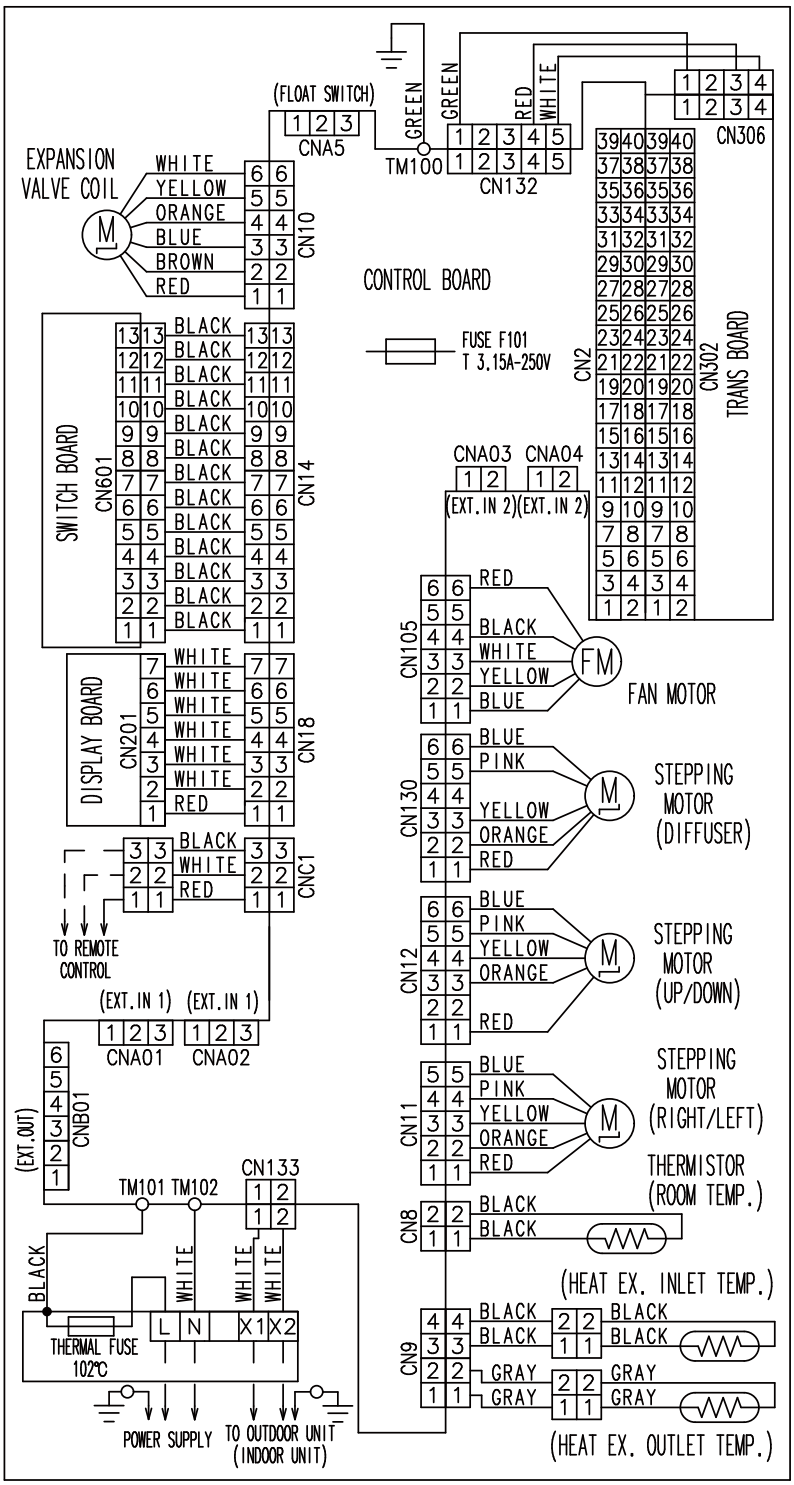

INDOOR UNITS

6. AIR VELOCITY AND TEMPERATURE DISTRIBUTIONS

6-1. COMPACT CASSETTE TYPE

Conditions
Fan speed : High
Operation mode : Fan
Voltage : 230V

■ MODELS : AUXB04GALH

● Air velocity distribution

Top view
Vertical flap : Upward

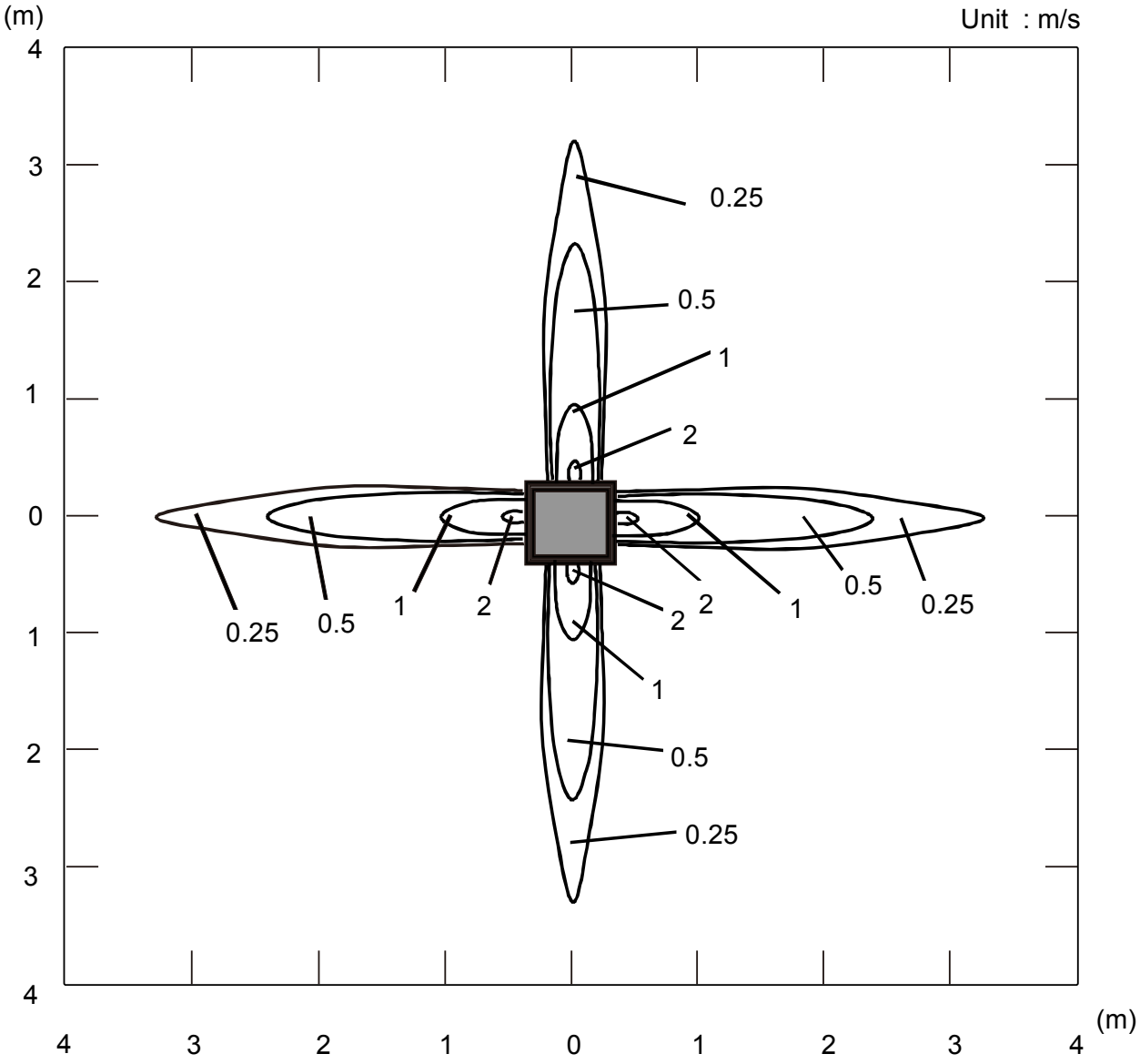

Side view
Vertical flap : Upward

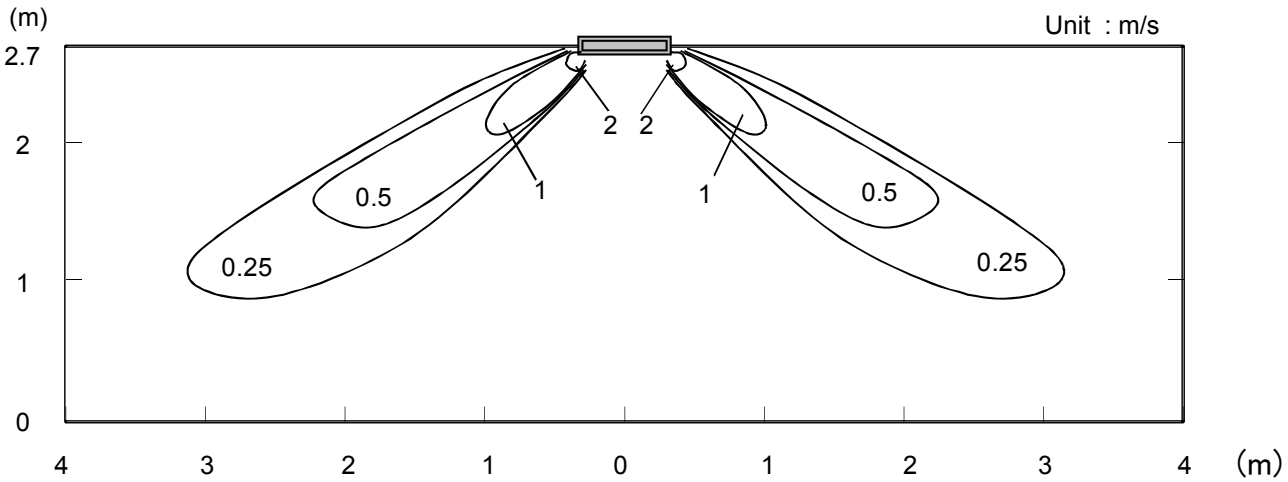

Conditions
Fan speed : High
Operation mode : Heat
Voltage : 230V
Reference Data

● Air velocity distribution

Side view
Vertical flap : Down

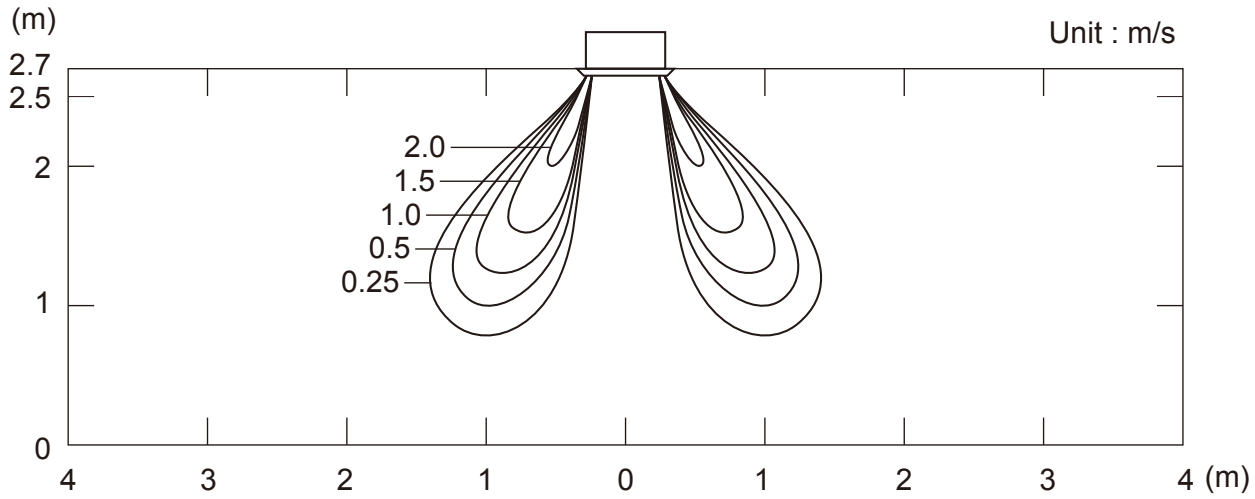

● Air temperature distribution

Side view
Vertical flap : Down

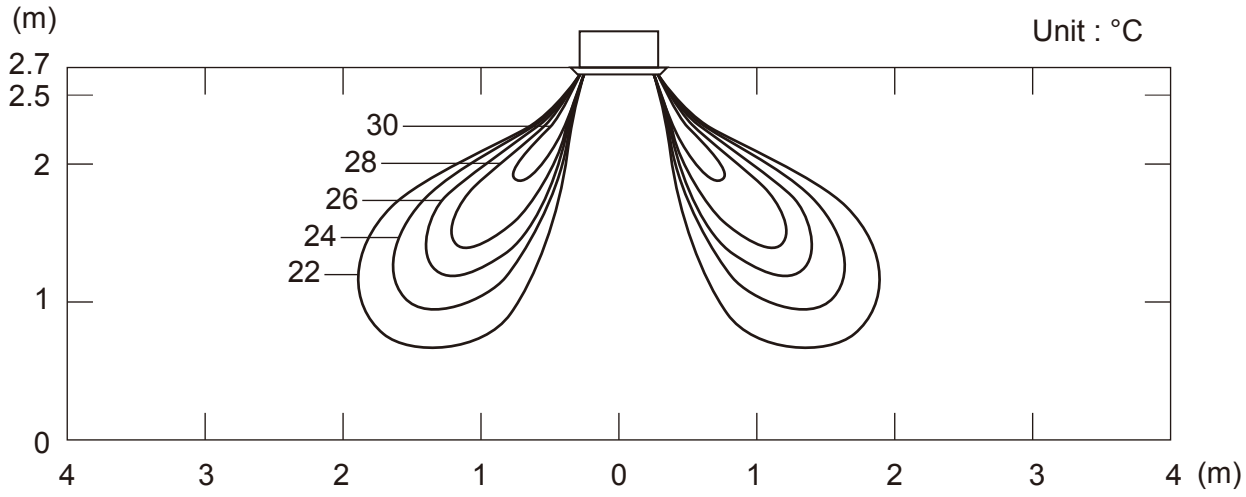

INDOOR UNITS

■ MODELS : AUXB07GALH

● Air velocity distribution

Conditions	
Fan speed	: High
Operation mode	: Fan
Voltage	: 230V

Top view
Vertical flap : Upward

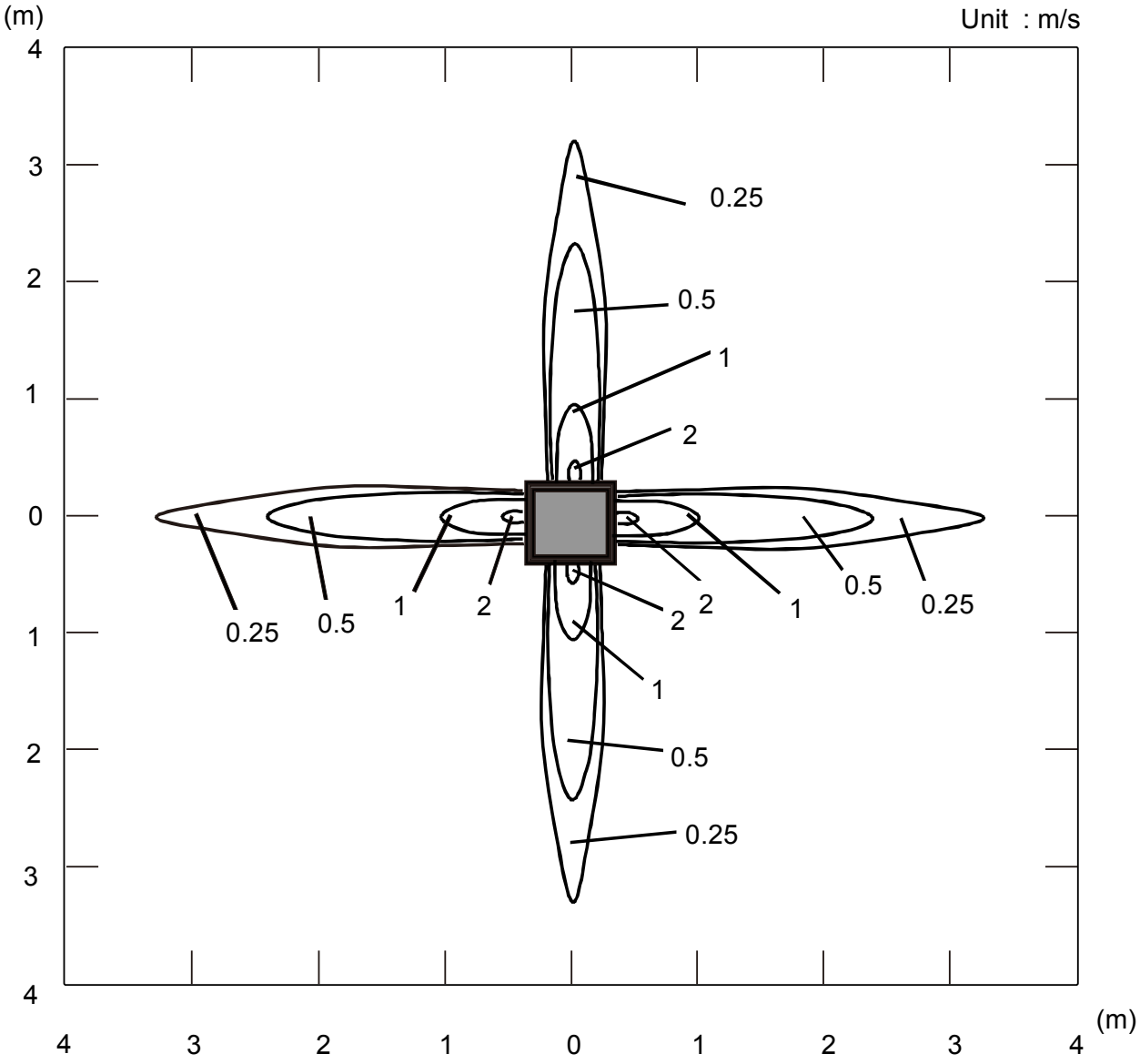

Side view
Vertical flap : Upward

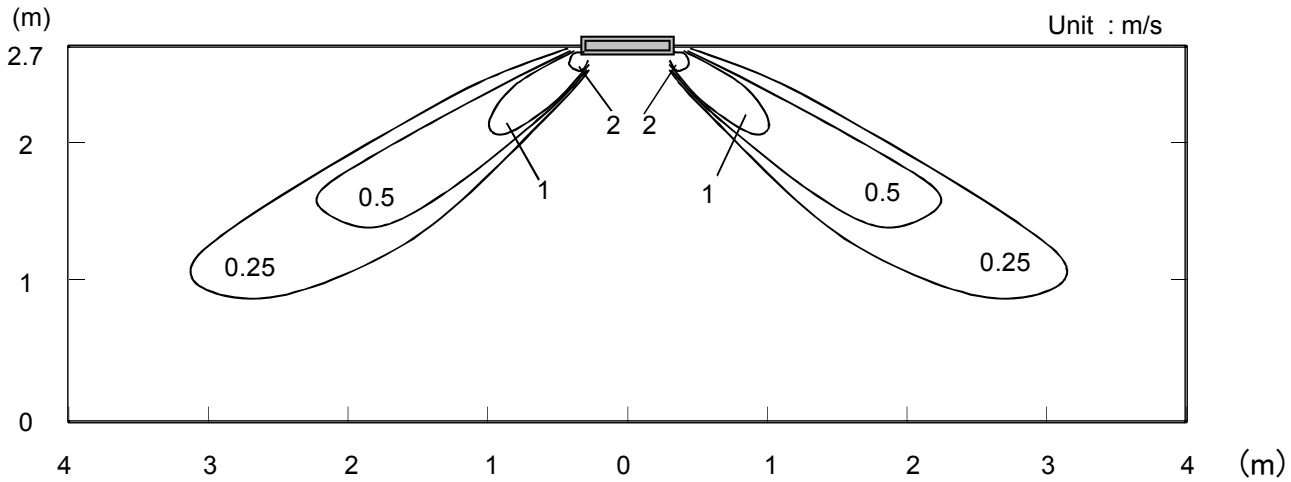

Conditions
Fan speed : High
Operation mode : Heat
Voltage : 230V
Reference Data

● Air velocity distribution

Side view
Vertical flap : Down

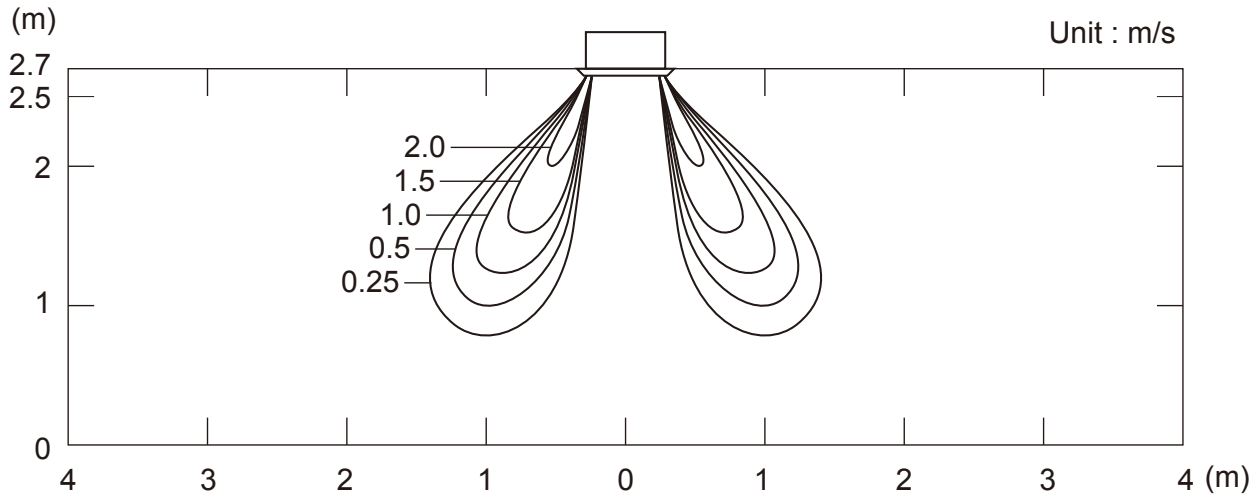

● Air temperature distribution

Side view
Vertical flap : Down

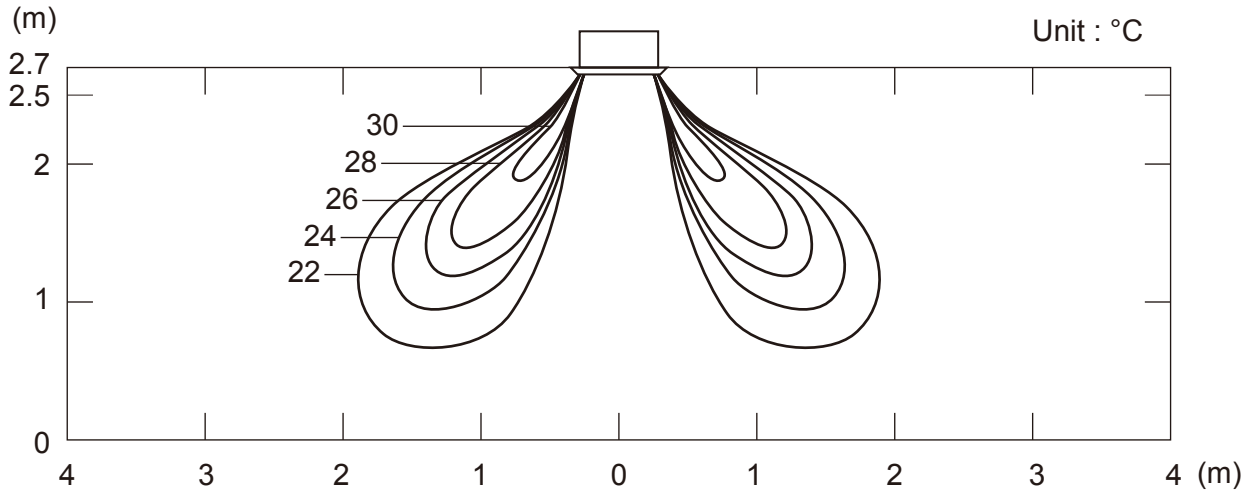

INDOOR UNITS

INDOOR UNITS

Conditions
Fan speed : High
Operation mode : Fan
Voltage : 230V

■ MODELS : AUXB09GALH

● Air velocity distribution

Top view
Vertical flap : Upward

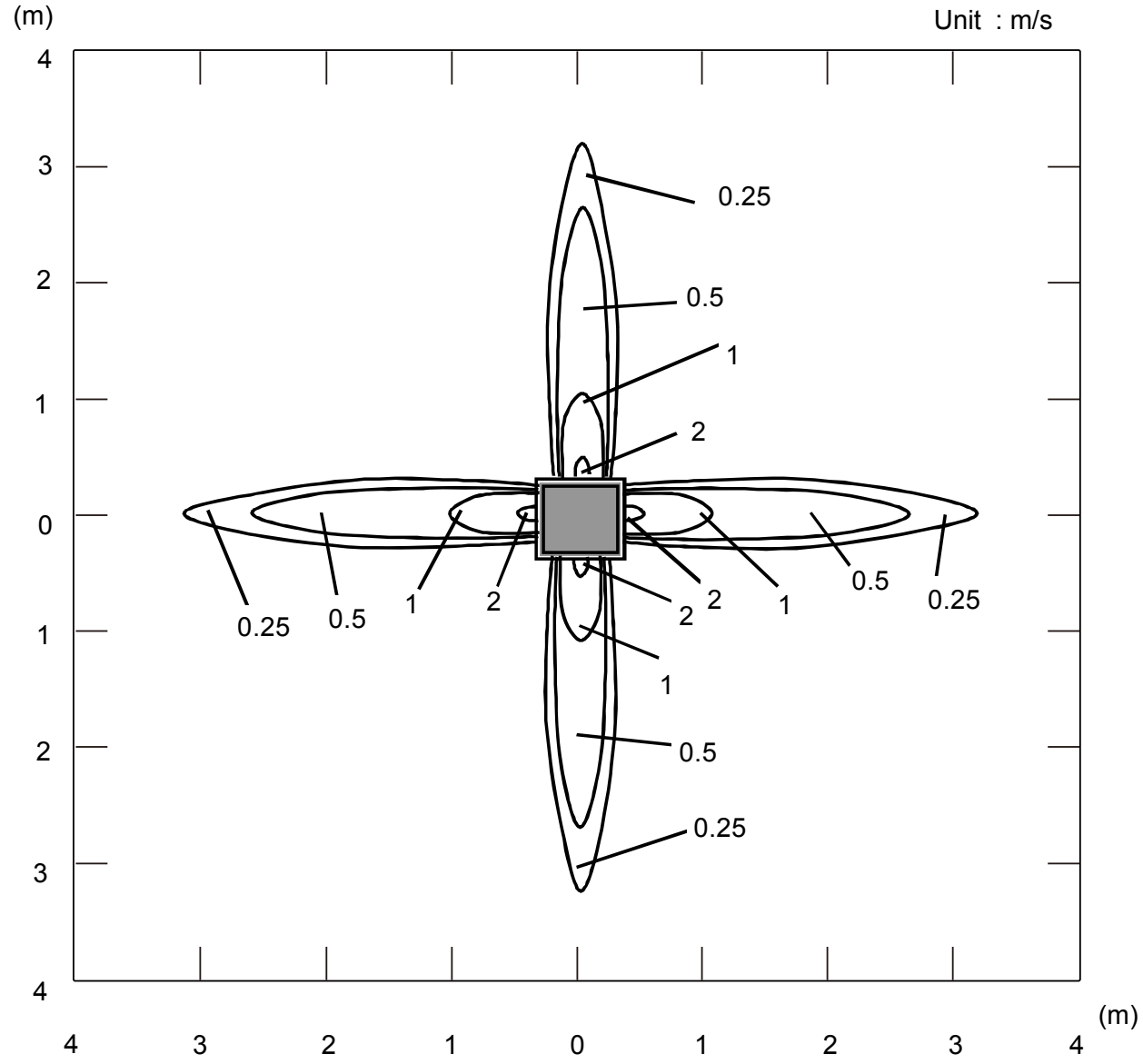

Side view
Vertical flap : Upward

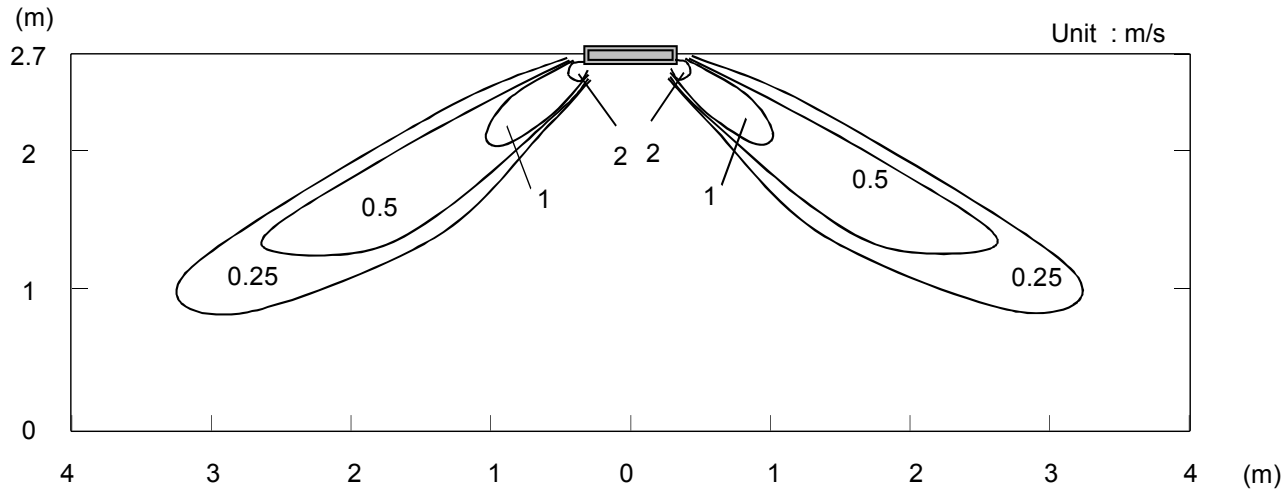

Conditions
Fan speed : High
Operation mode : Heat
Voltage : 230V
Reference Data

● Air velocity distribution

Side view
Vertical flap : Down

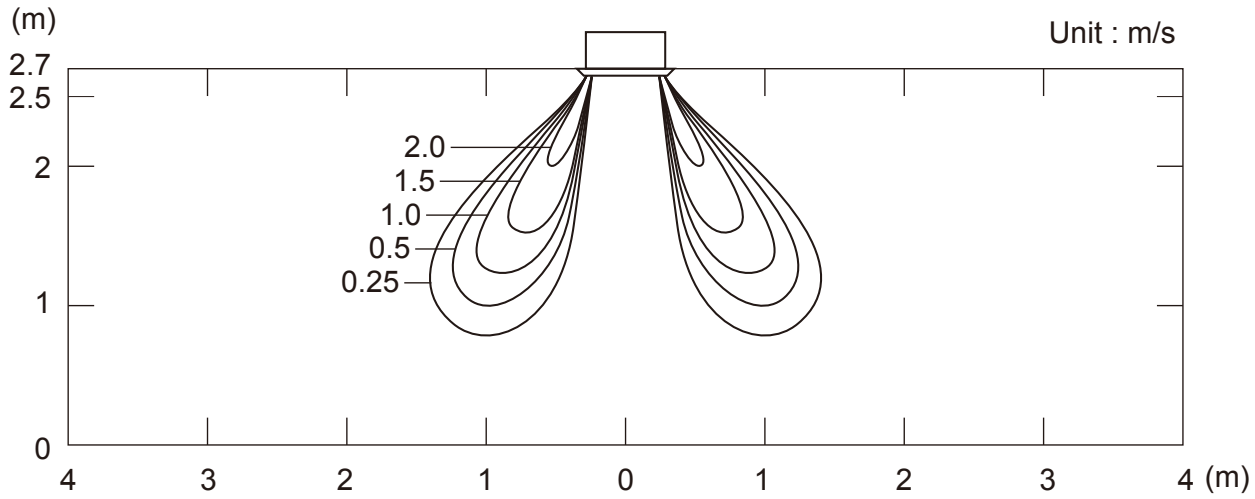

● Air temperature distribution

Side view
Vertical flap : Down

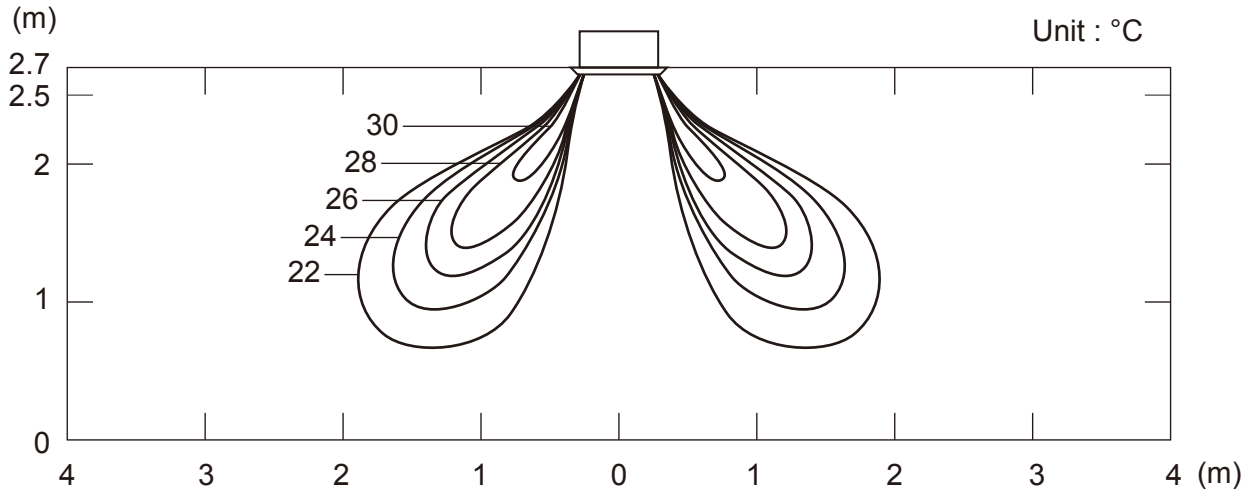

INDOOR UNITS

INDOOR UNITS

Conditions
Fan speed : High
Operation mode : Fan
Voltage : 230V

■ MODELS : AUXB12GALH

● Air velocity distribution

Top view
Vertical flap : Upward

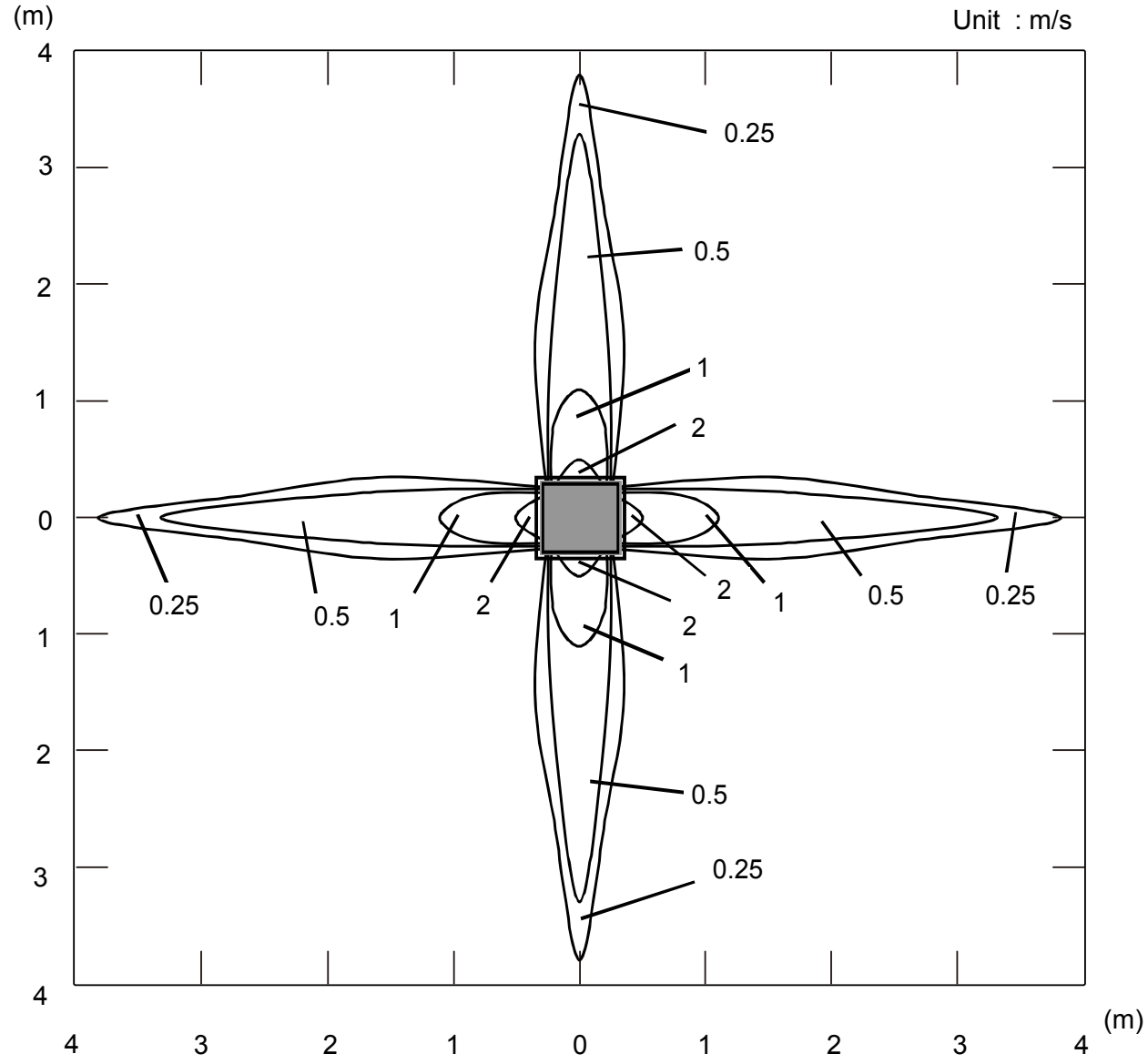

Side view
Vertical flap : Upward

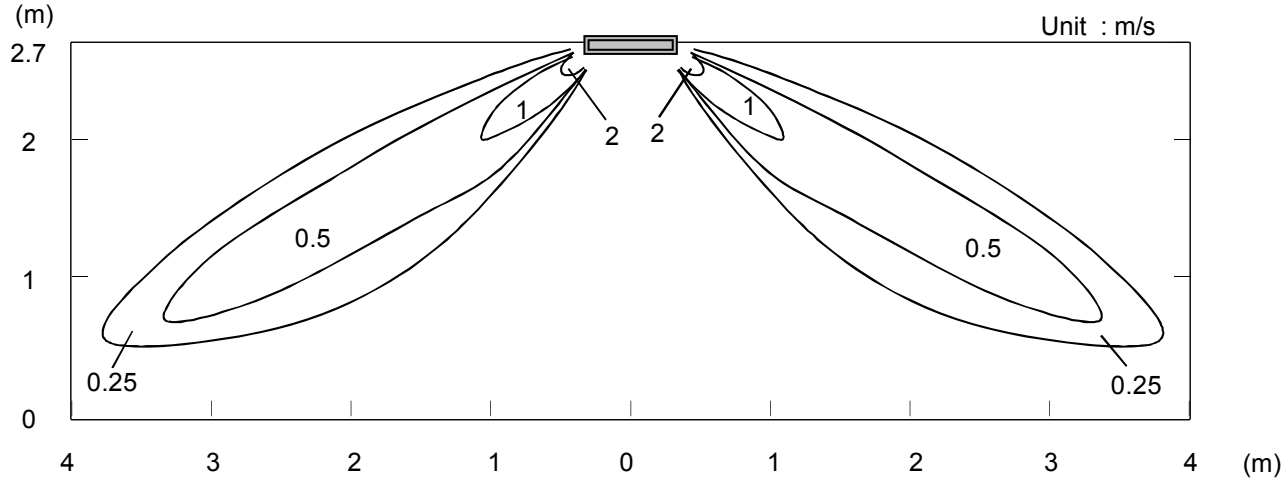

Conditions
Fan speed : High
Operation mode : Heat
Voltage : 230V
Reference Data

● Air velocity distribution

Side view
Vertical flap : Down

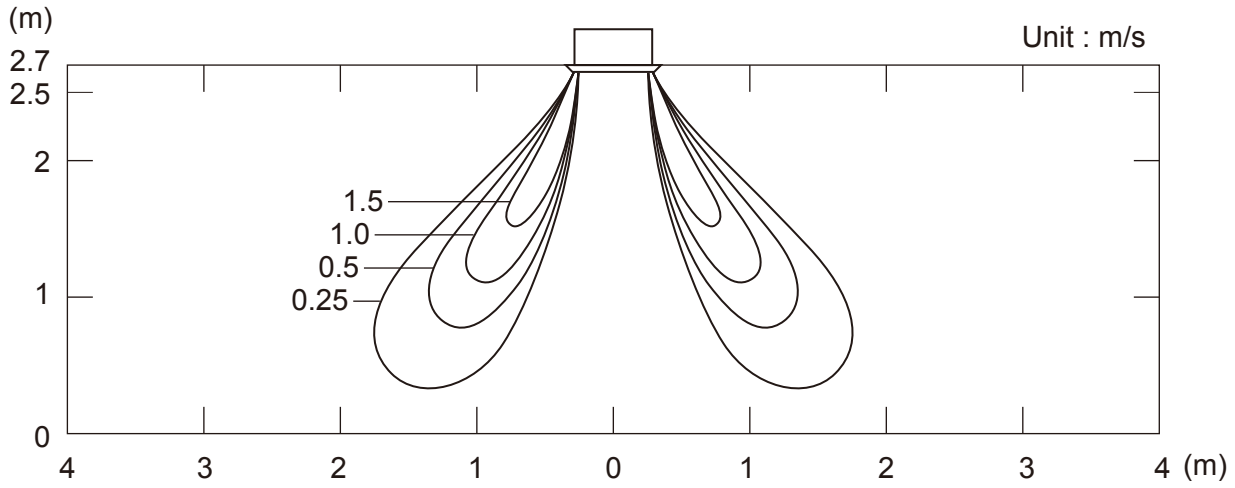

● Air temperature distribution

Side view
Vertical flap : Down

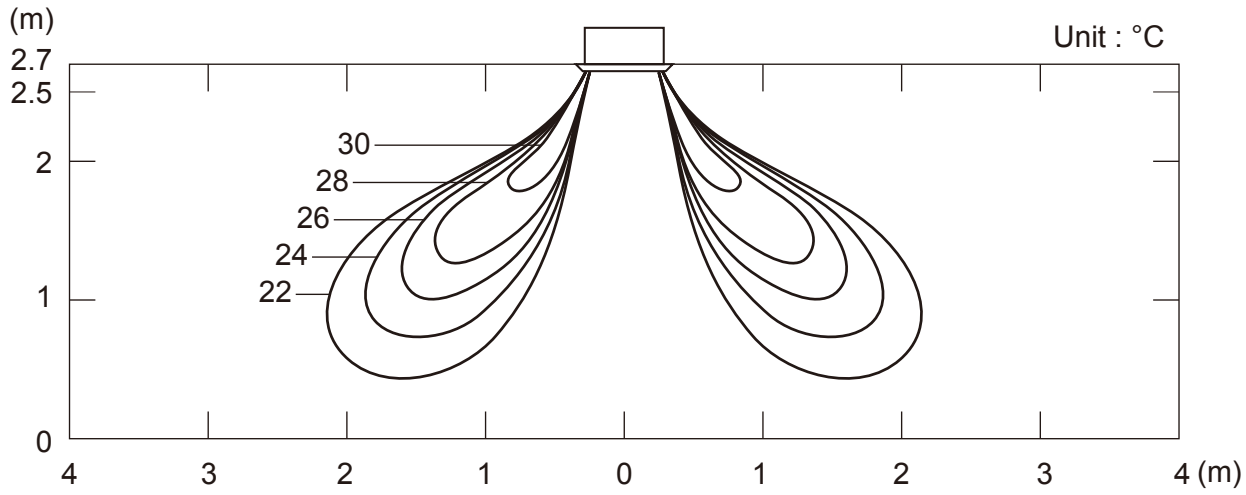

INDOOR UNITS

Conditions
Fan speed : High
Operation mode : Fan
Voltage : 230V

■ MODELS : AUXB14GALH

● Air velocity distribution

Top view
Vertical flap : Upward

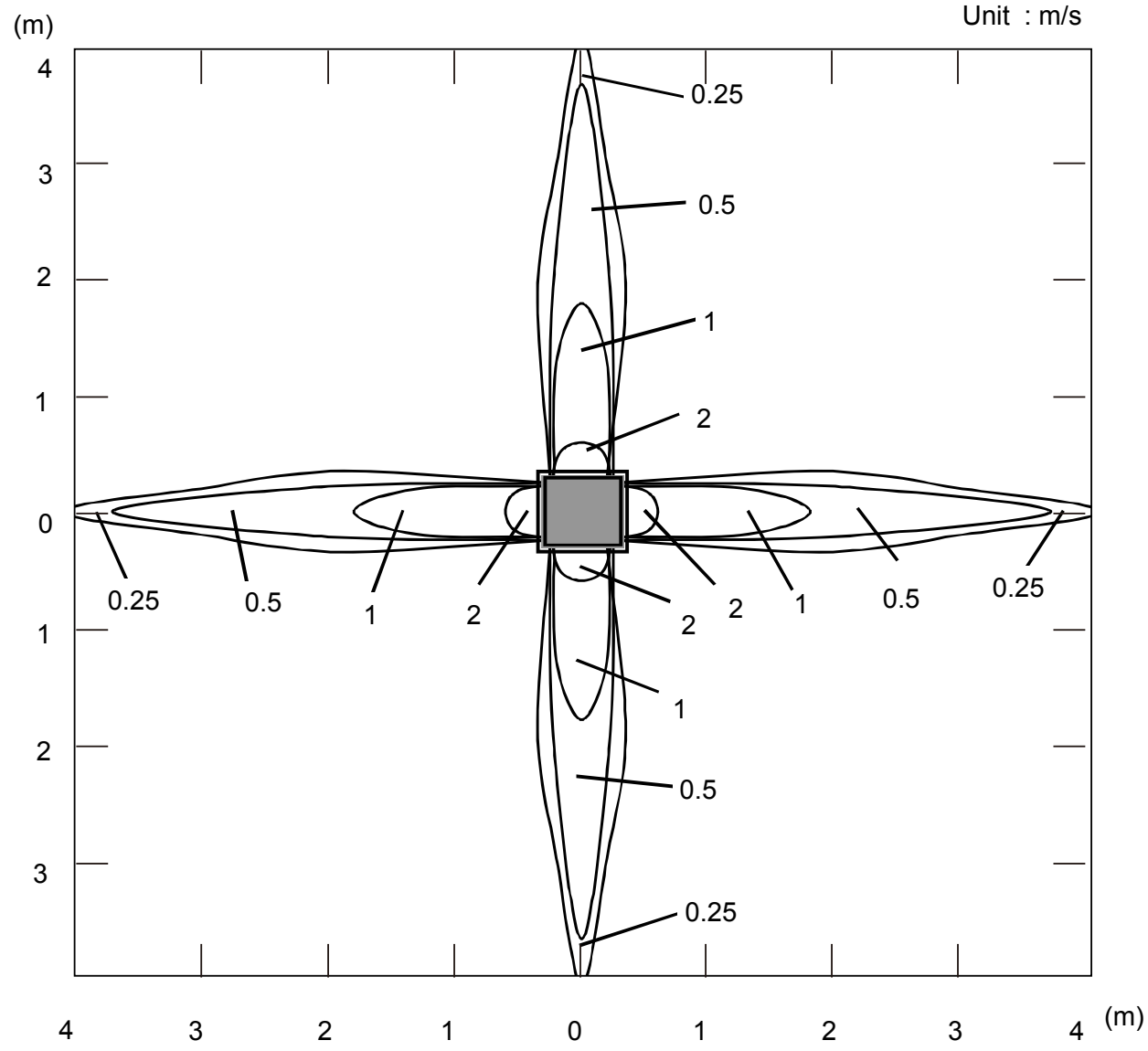

Side view
Vertical flap : Upward

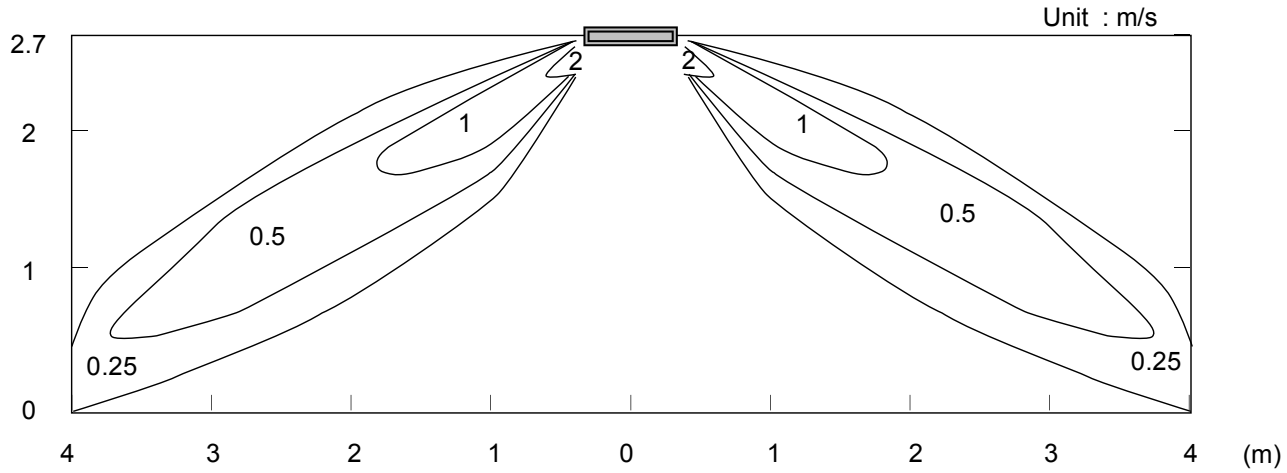

Conditions
Fan speed : High
Operation mode : Heat
Voltage : 230V
Reference Data

● Air velocity distribution

Side view
Vertical flap : Down

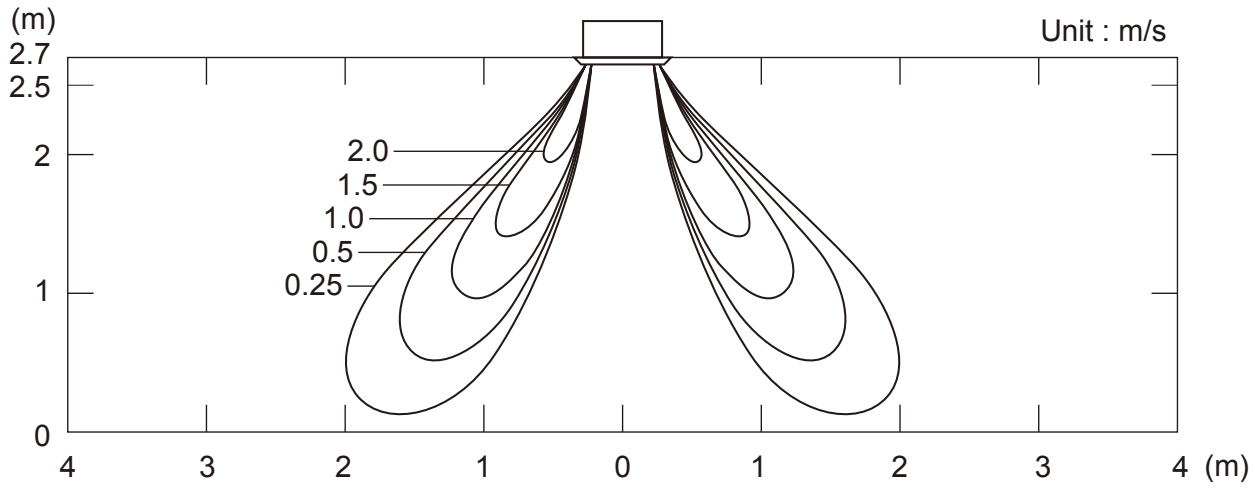

● Air temperature distribution

Side view
Vertical flap : Down

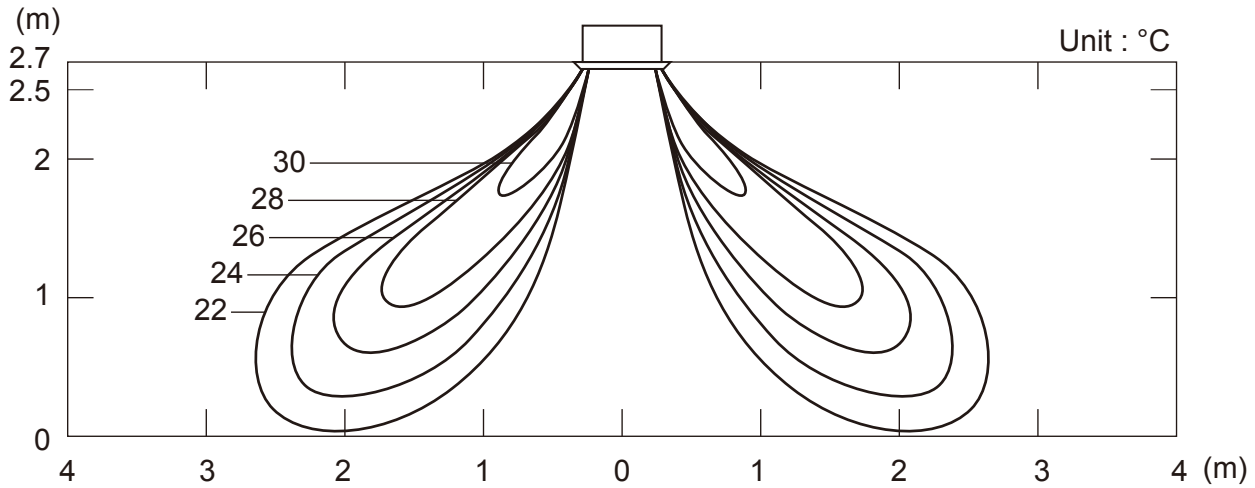

INDOOR UNITS

INDOOR UNITS

Conditions
Fan speed : High
Operation mode : Fan
Voltage : 230V

■ MODELS : AUXB18GALH

● Air velocity distribution

Top view
Vertical flap : Upward

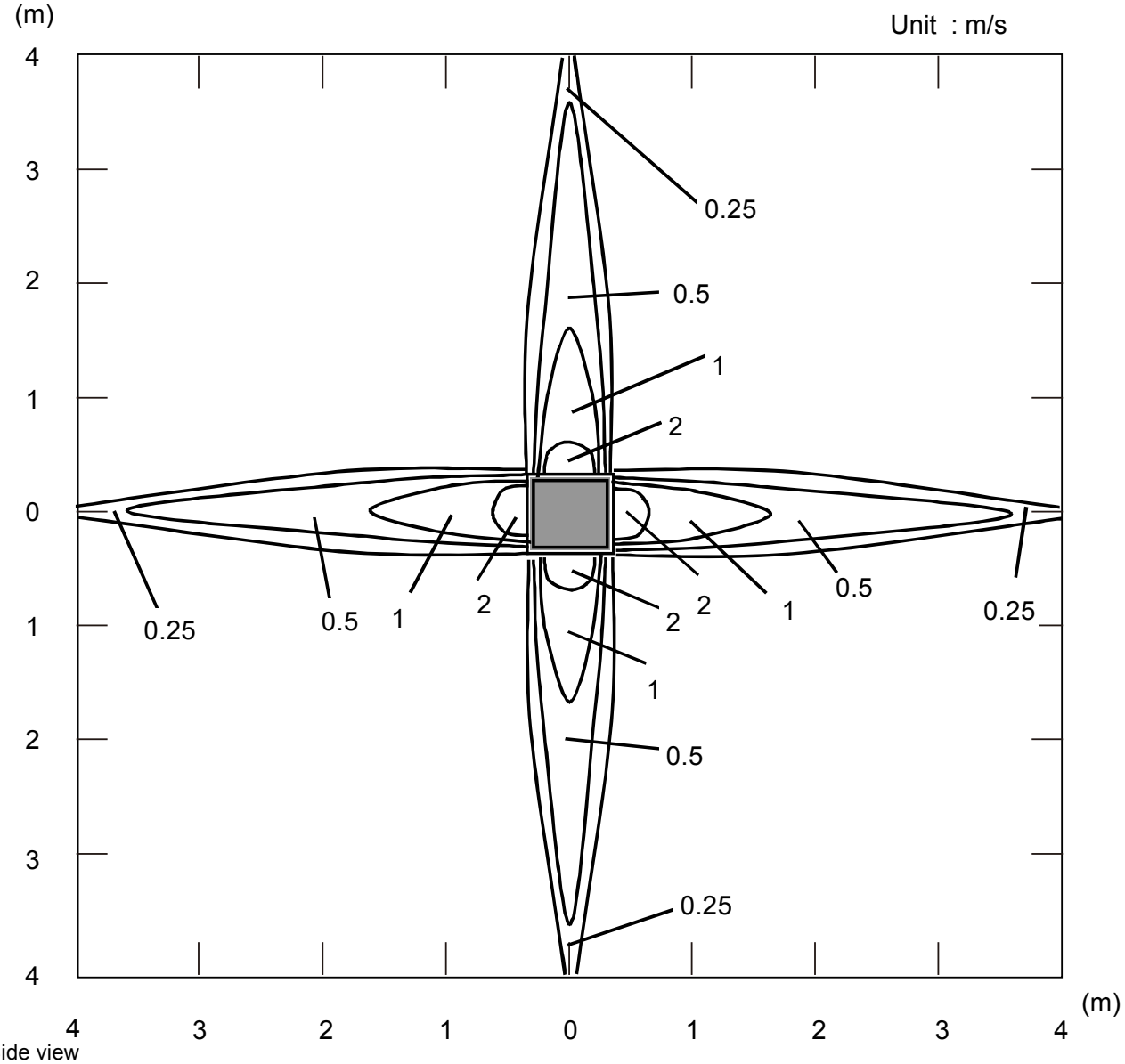

Side view
Vertical flap : Upward

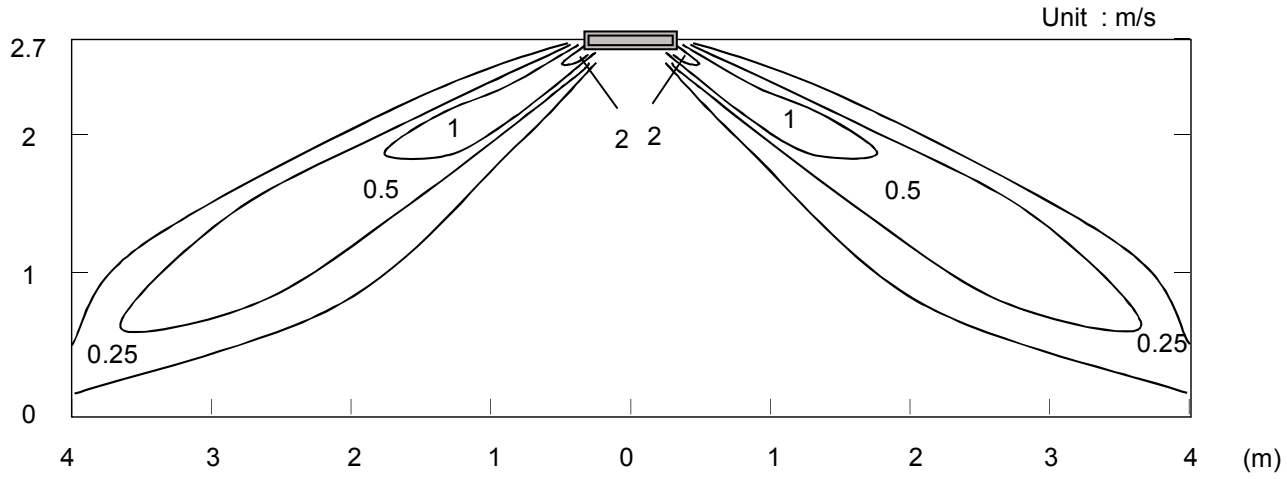

Conditions
Fan speed : High
Operation mode : Heat
Voltage : 230V
Reference Data

● Air velocity distribution

Side view
Vertical flap : Down

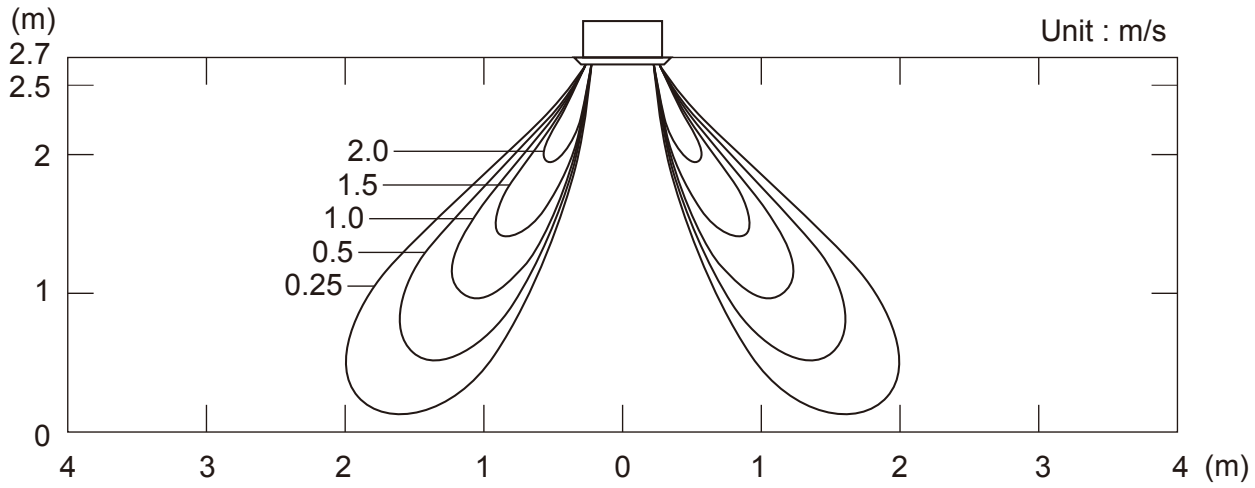

● Air temperature distribution

Side view
Vertical flap : Down

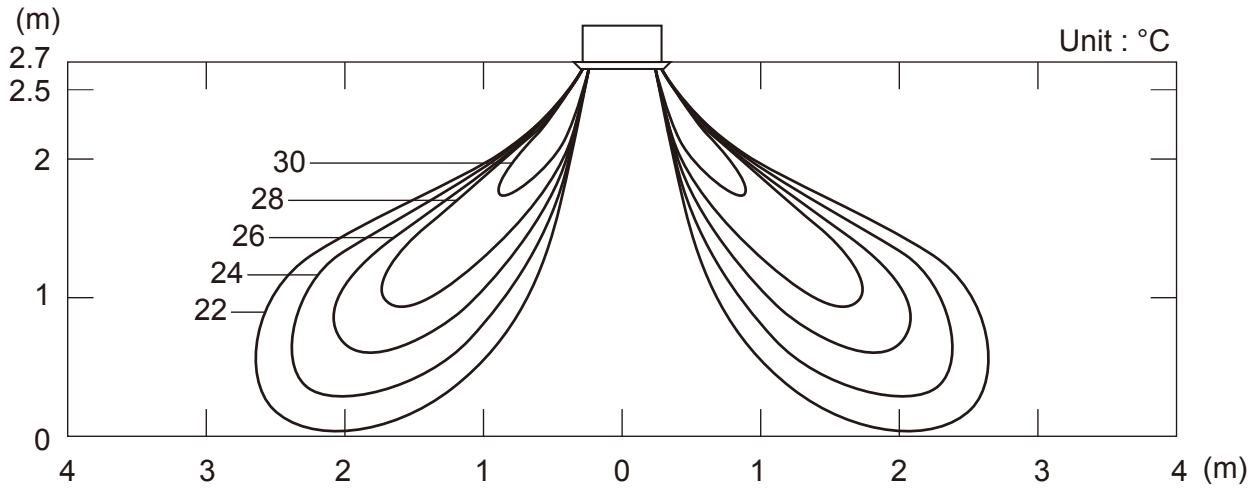

INDOOR UNITS

INDOOR UNITS

Conditions
Fan speed : High
Operation mode : Fan
Voltage : 230V

■ MODELS : AUXB24GALH

● Air velocity distribution

Top view
Vertical flap : Upward

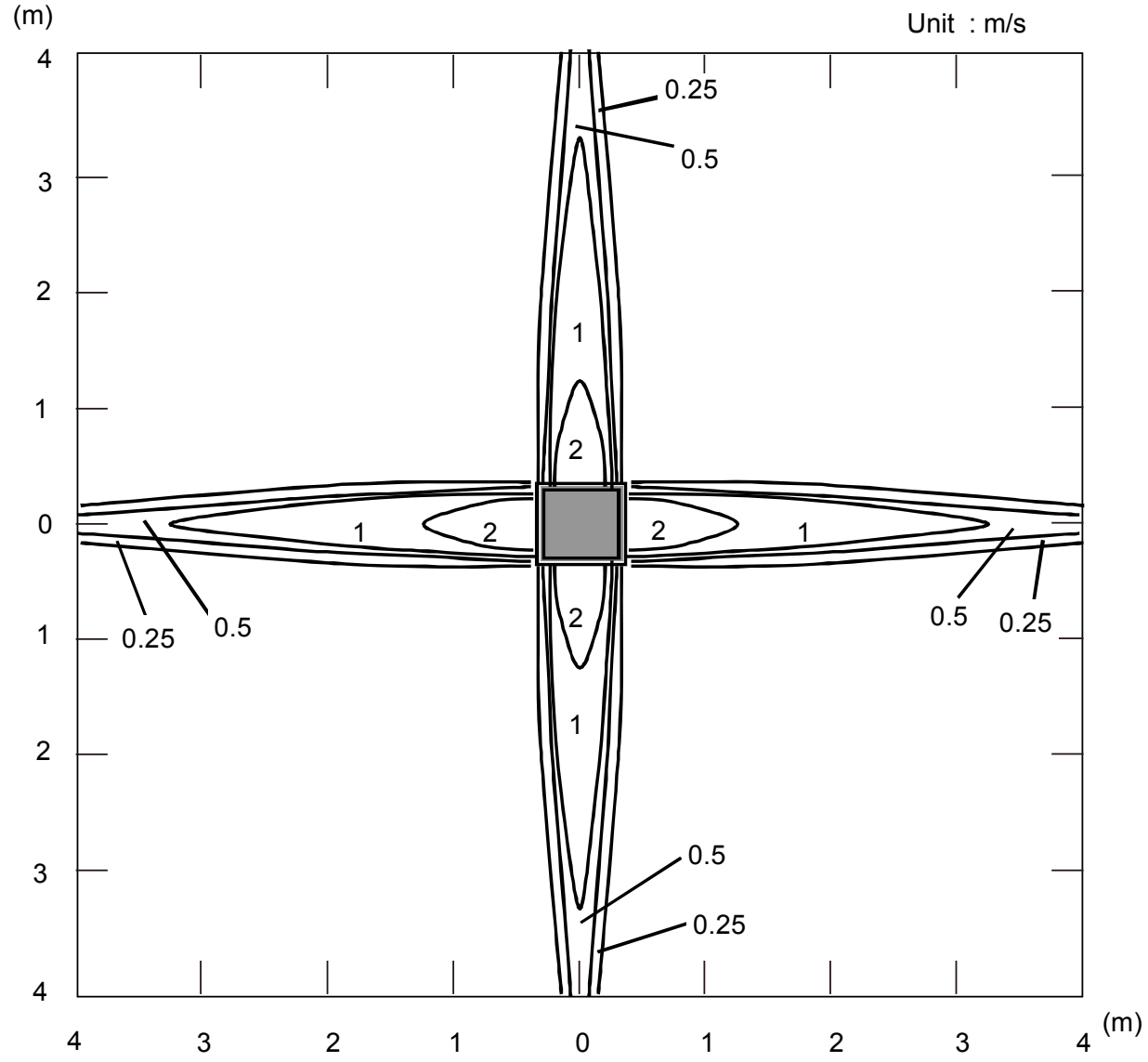

Side view
Vertical flap : Upward

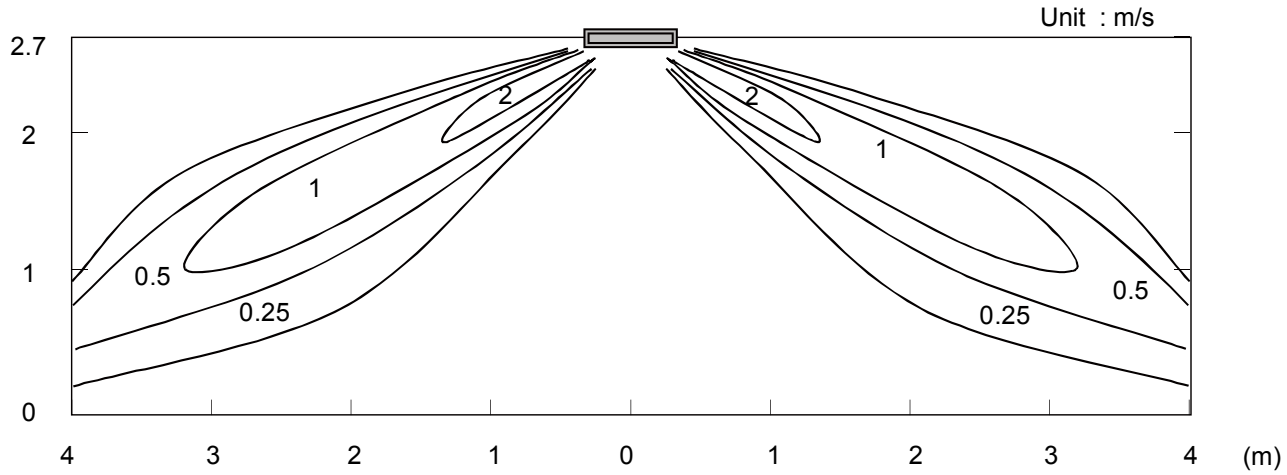

Conditions
Fan speed : High
Operation mode : Heat
Voltage : 230V
Reference Data

● Air velocity distribution

Side view
Vertical flap : Down

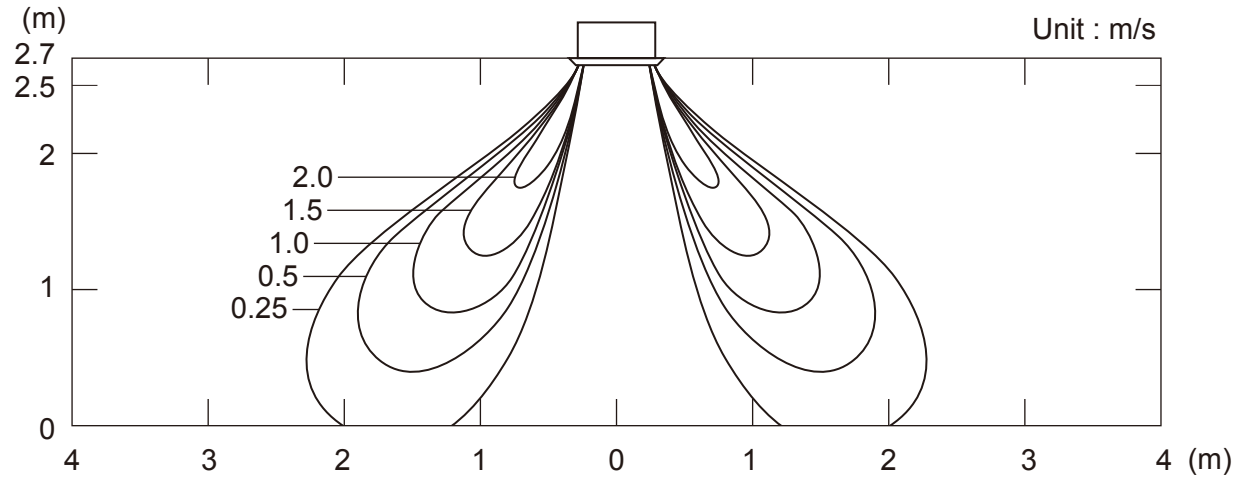

● Air temperature distribution

Side view
Vertical flap : Down

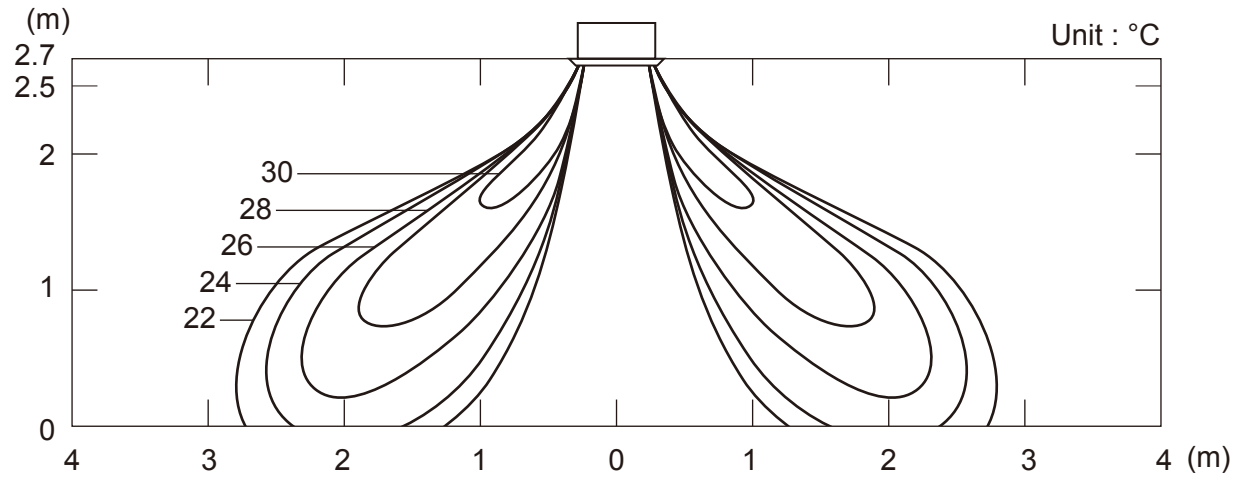

INDOOR UNITS

6-2. CASSETTE TYPE

■ MODELS : AUXD18GALH

● Air velocity distribution

Conditions
Fan speed : High
Operation mode : Fan
Voltage : 230V

Top view
Vertical flap : Upward

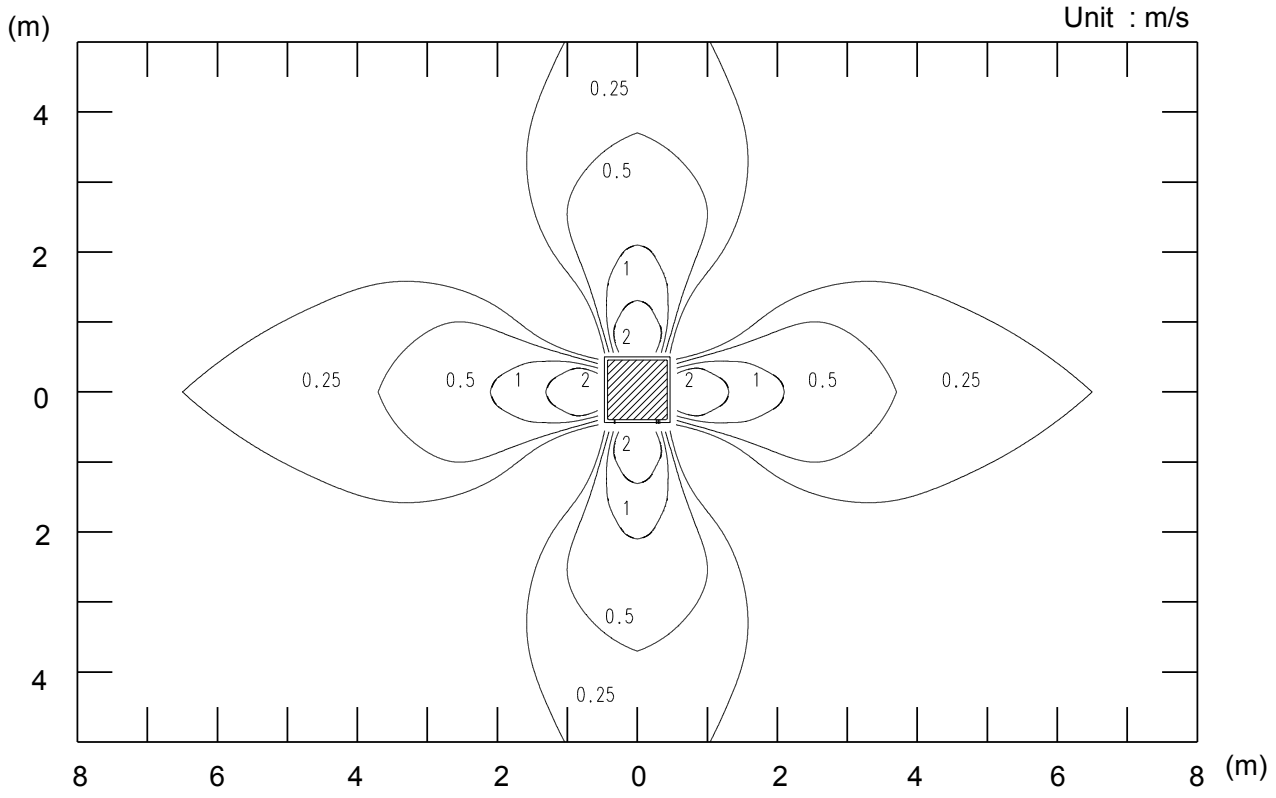

Side view
Vertical flap : Upward

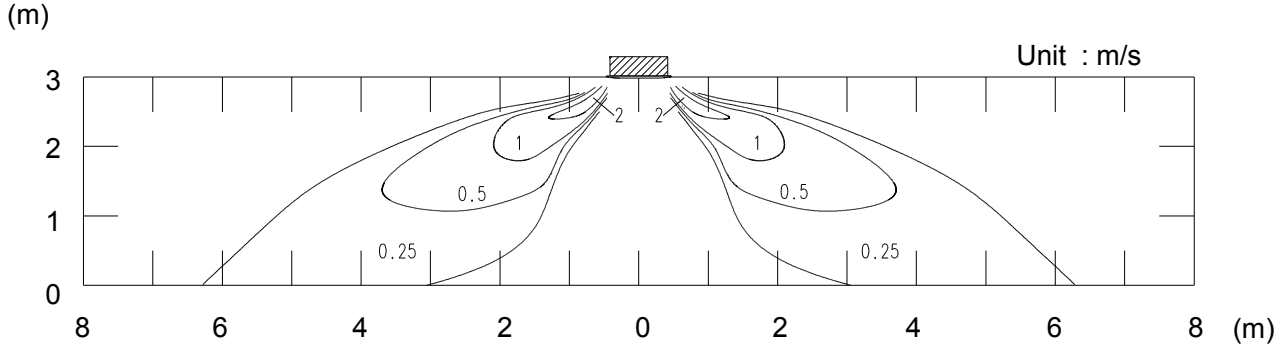

INDOOR UNITS

Conditions
Fan speed : High
Operation mode : Heat
Voltage : 230V
Reference Data

● Air velocity distribution

Side view
Vertical flap : Down

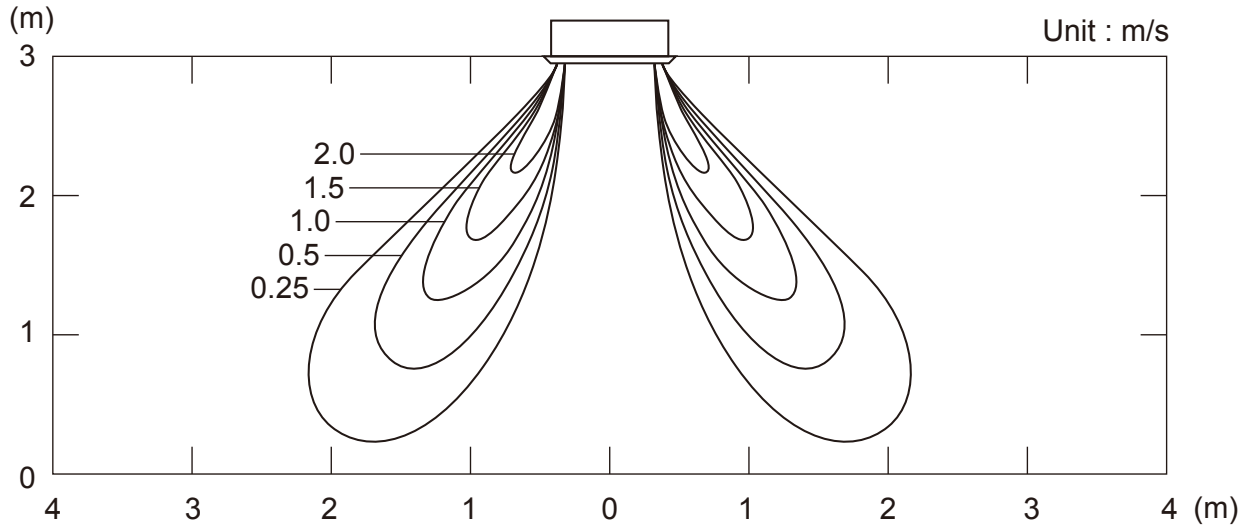

● Air temperature distribution

Side view
Vertical flap : Down

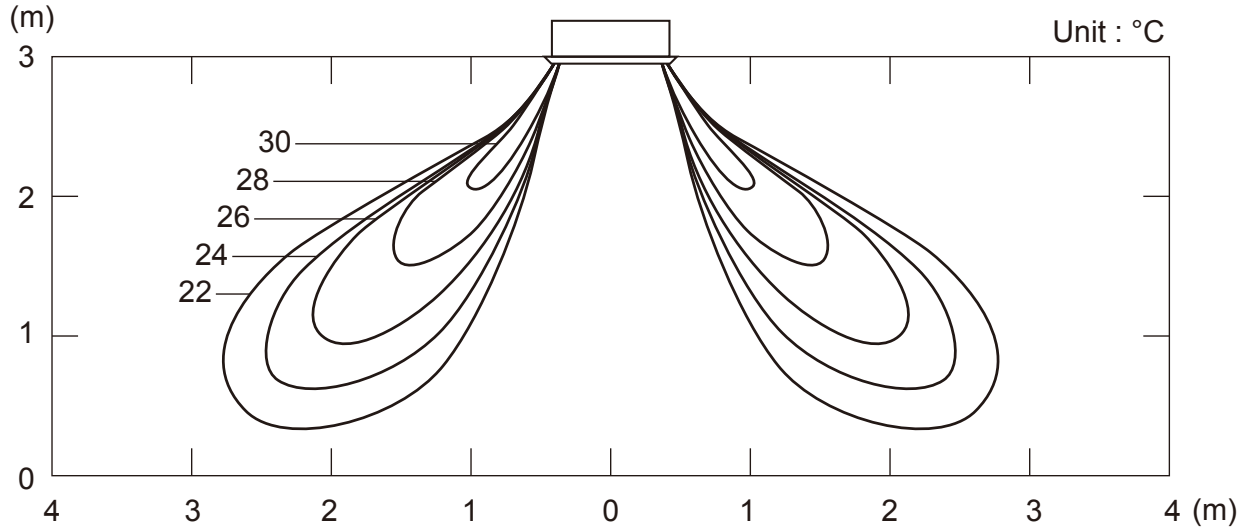

INDOOR UNITS

Conditions
Fan speed : High
Operation mode : Fan
Voltage : 230V

■ MODELS : AUXD24GALH

● Air velocity distribution

Top view
Vertical flap : Upward

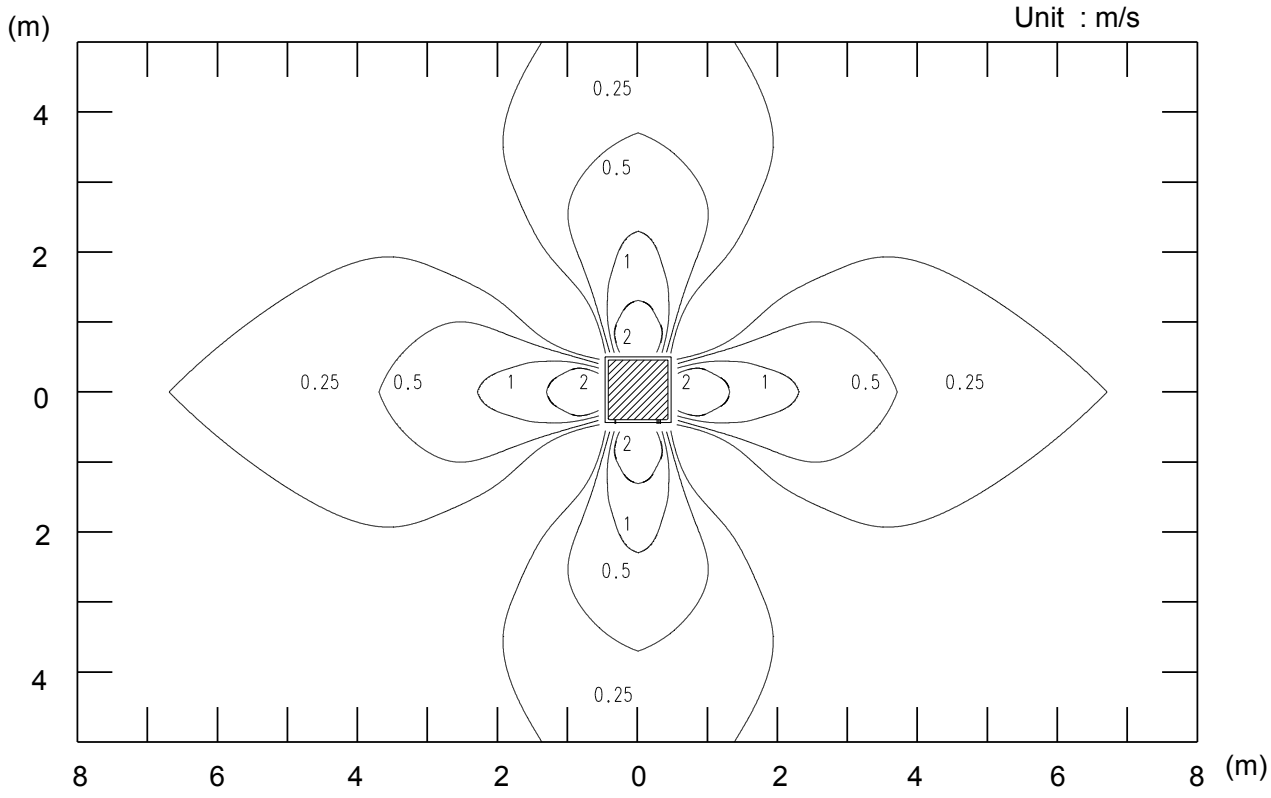

Side view
Vertical flap : Upward

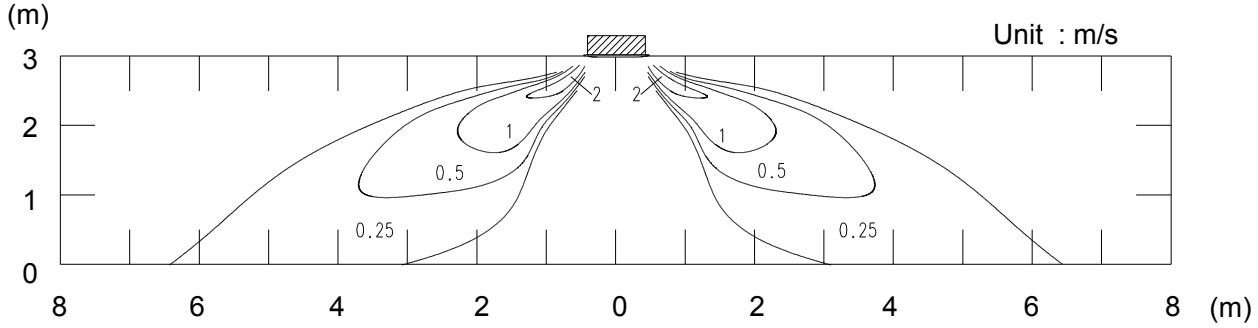

Conditions
Fan speed : High
Operation mode : Heat
Voltage : 230V
Reference Data

● Air velocity distribution

Side view
Vertical flap : Down

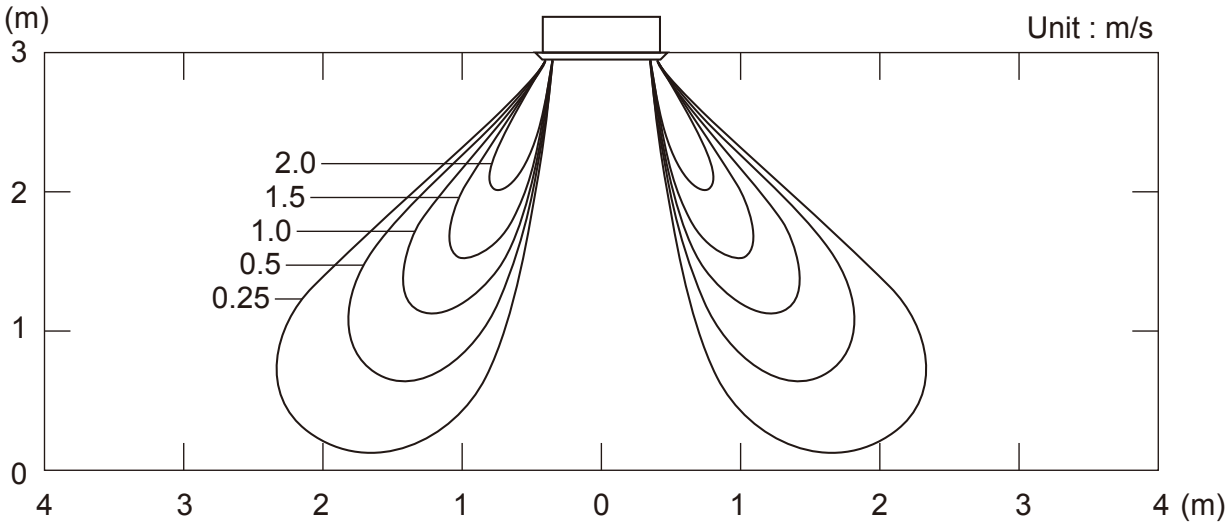

● Air temperature distribution

Side view
Vertical flap : Down

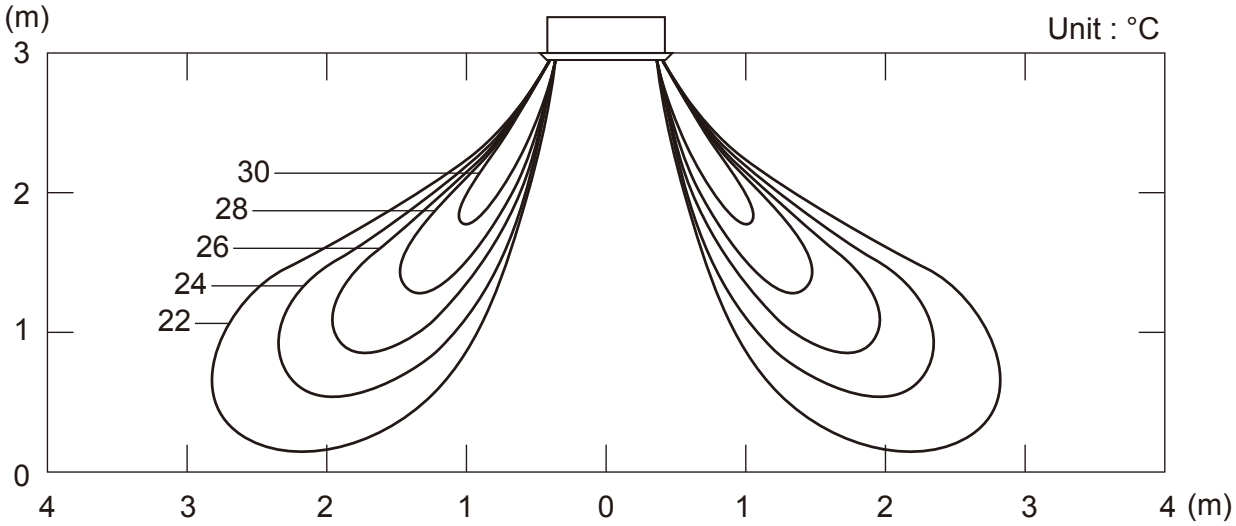

INDOOR UNITS

INDOOR UNITS

Conditions
Fan speed : High
Operation mode : Fan
Voltage : 230V

■ MODELS : AUXA30GALH

● Air velocity distribution

Top view
Vertical flap : Upward

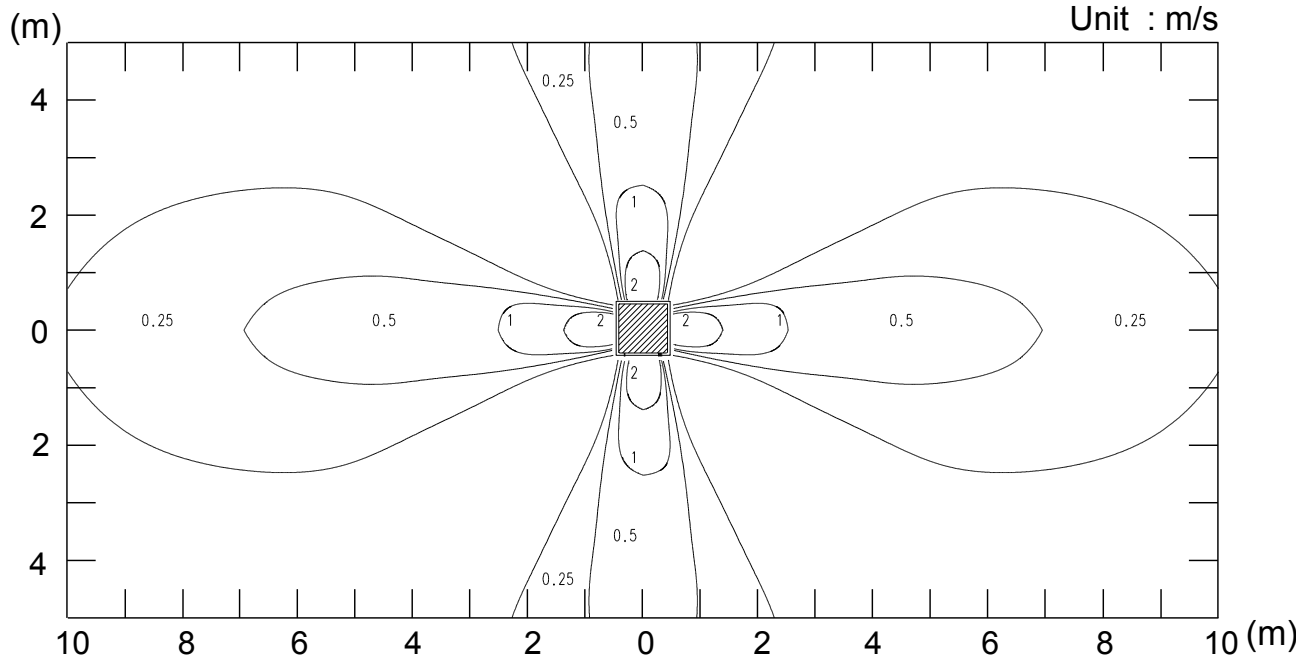

Side view
Vertical flap : Upward

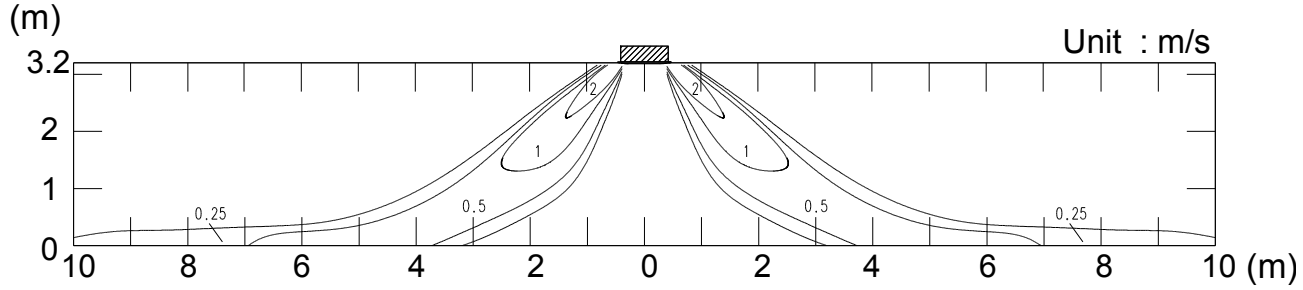

Conditions
Fan speed : High
Operation mode : Heat
Voltage : 230V
Reference Data

● Air velocity distribution

Side view
Vertical flap : Down

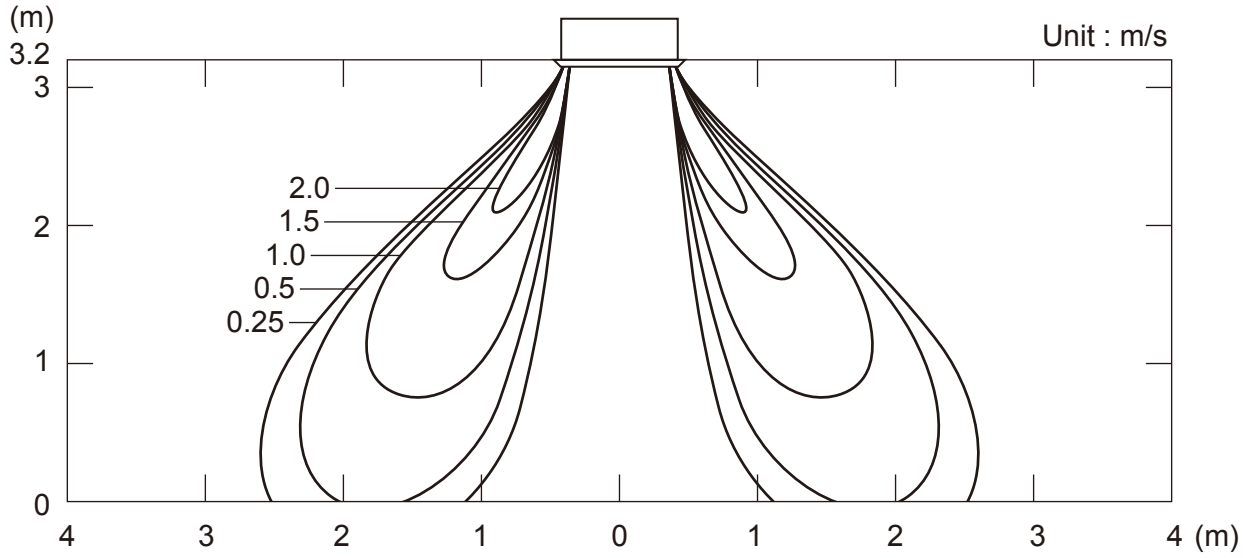

● Air temperature distribution

Side view
Vertical flap : Down

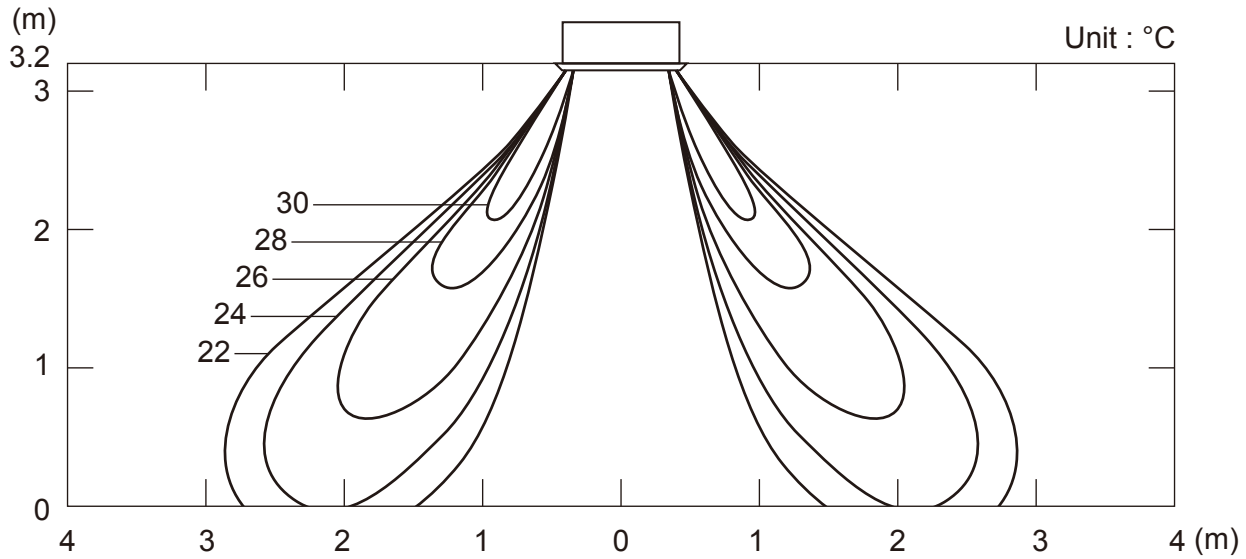

INDOOR UNITS

Conditions
Fan speed : High
Operation mode : Fan
Voltage : 230V

■ MODELS : AUXA36GALH

● Air velocity distribution

Top view
Vertical flap : Upward

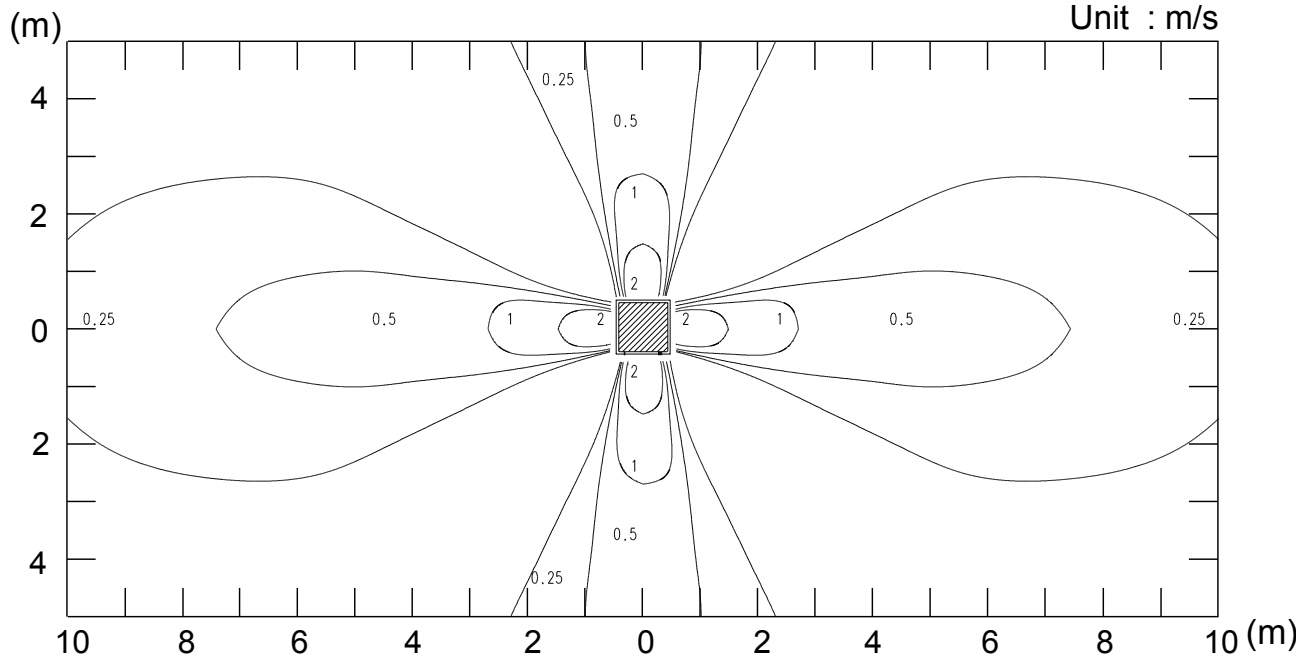

Side view
Vertical flap : Upward

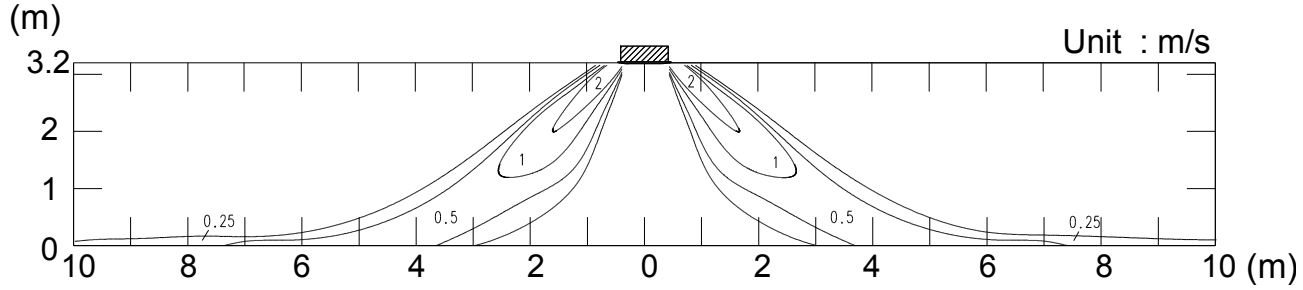

INDOOR UNITS

Conditions
Fan speed : High
Operation mode : Heat
Voltage : 230V
Reference Data

● Air velocity distribution

Side view
Vertical flap : Down

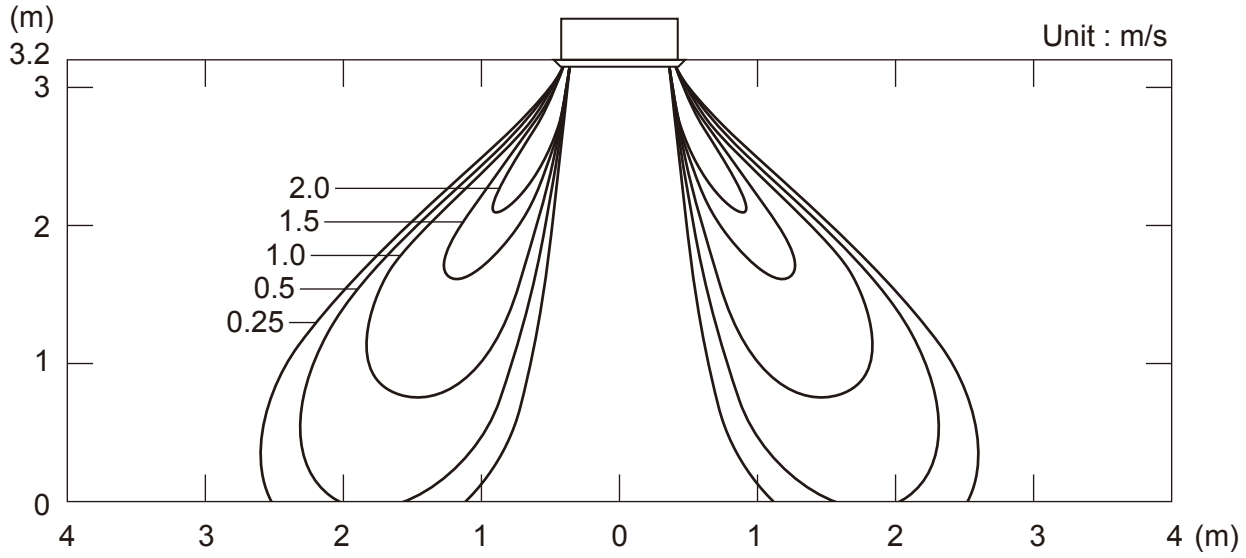

● Air temperature distribution

Side view
Vertical flap : Down

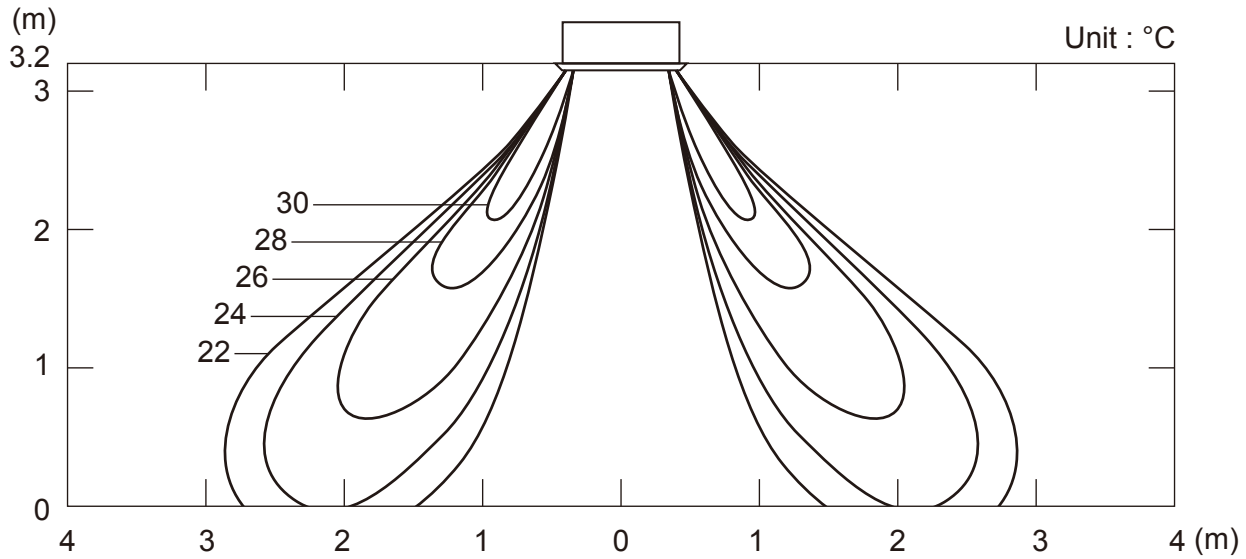

INDOOR UNITS

Conditions
Fan speed : High
Operation mode : Fan
Voltage : 230V

■ MODELS : AUXA45GALH

● Air velocity distribution

Top view
Vertical flap : Upward

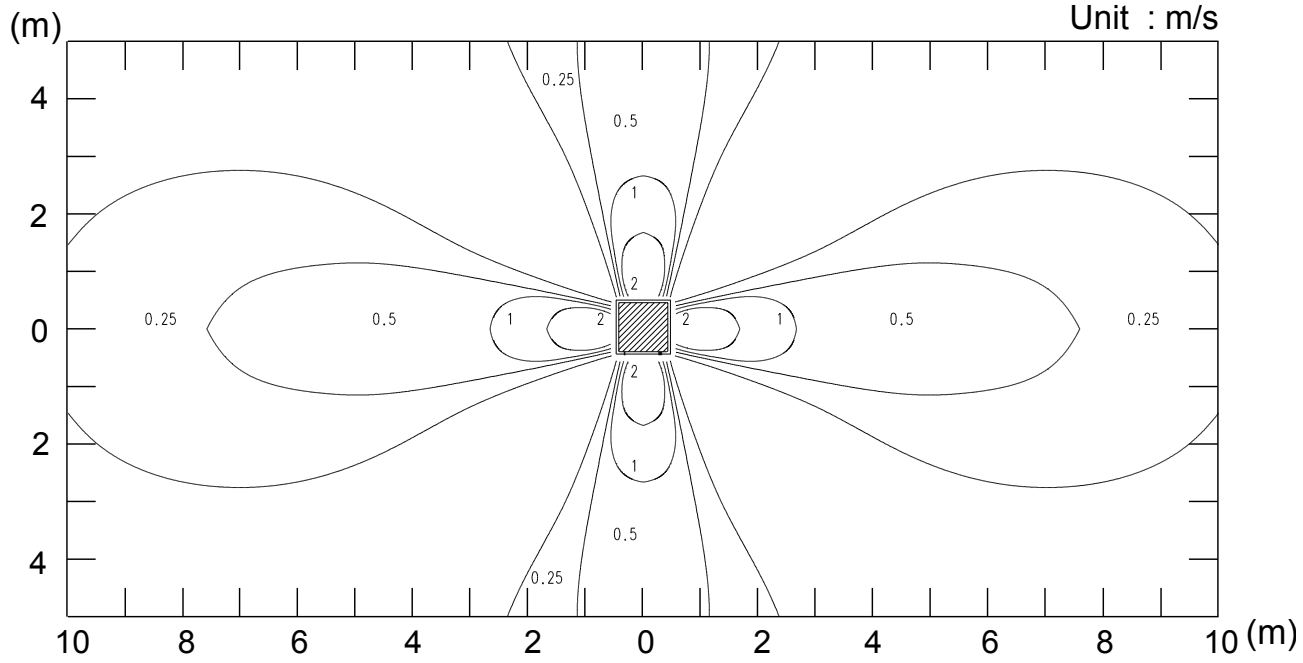

Side view
Vertical flap : Upward

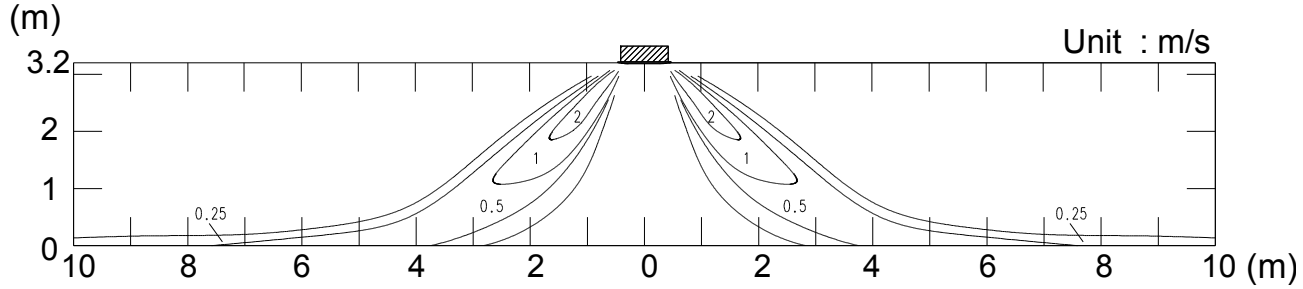

INDOOR UNITS

Conditions
Fan speed : High
Operation mode : Heat
Voltage : 230V
Reference Data

● Air velocity distribution

Side view
Vertical flap : Down

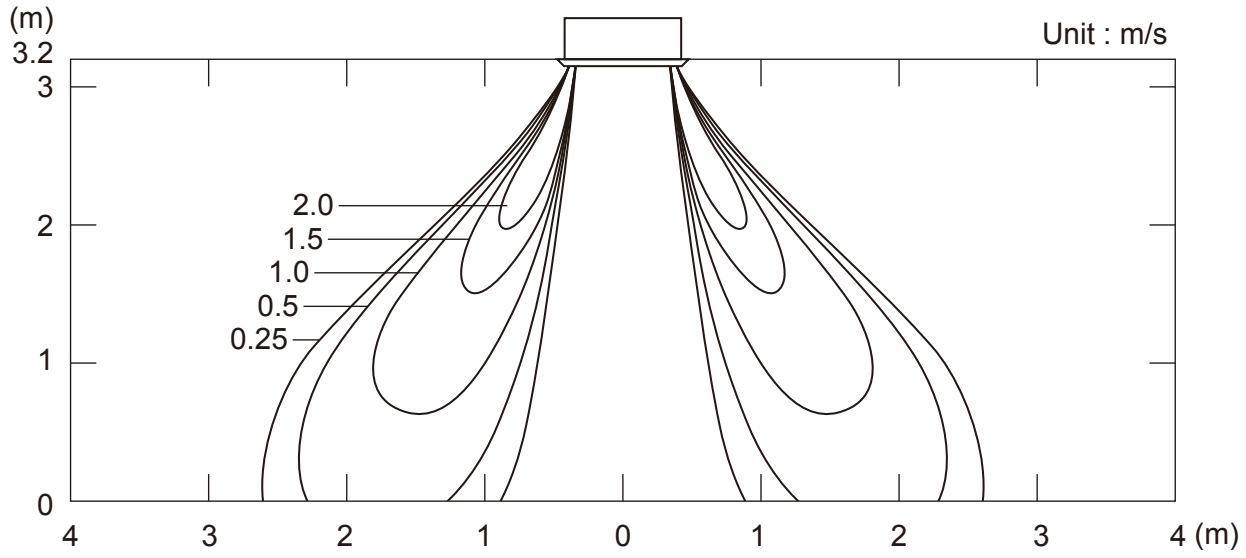

● Air temperature distribution

Side view
Vertical flap : Down

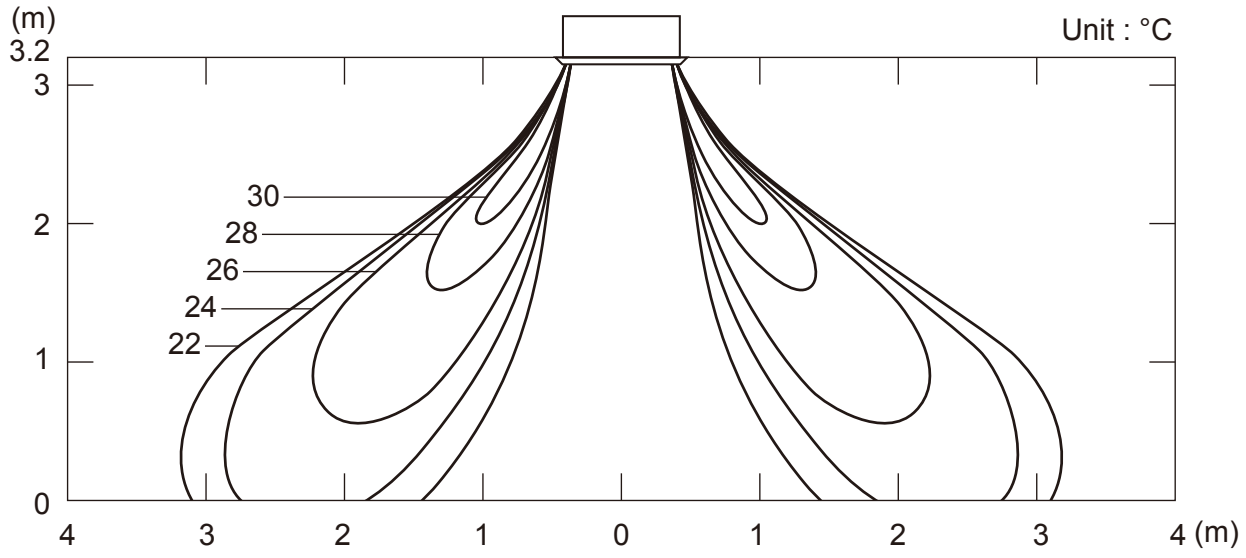

INDOOR UNITS

Conditions
Fan speed : High
Operation mode : Fan
Voltage : 230V

■ MODELS : AUXA54GALH

● Air velocity distribution

Top view
Vertical flap : Upward

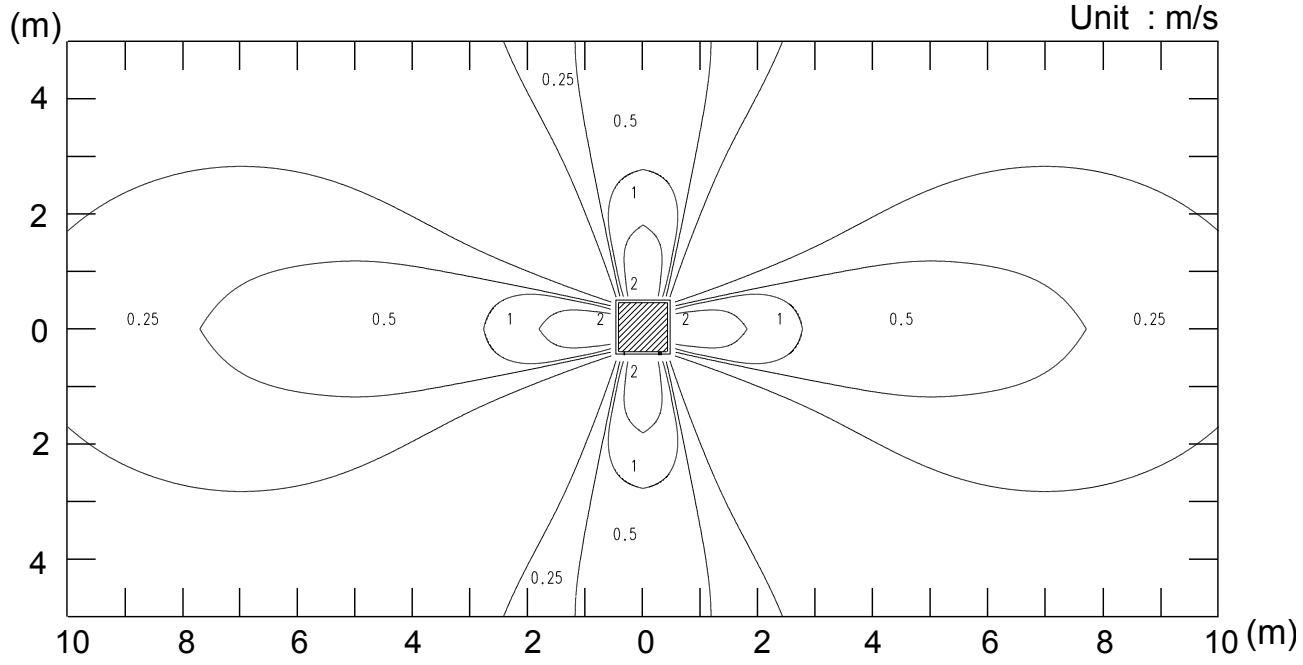

Side view
Vertical flap : Upward

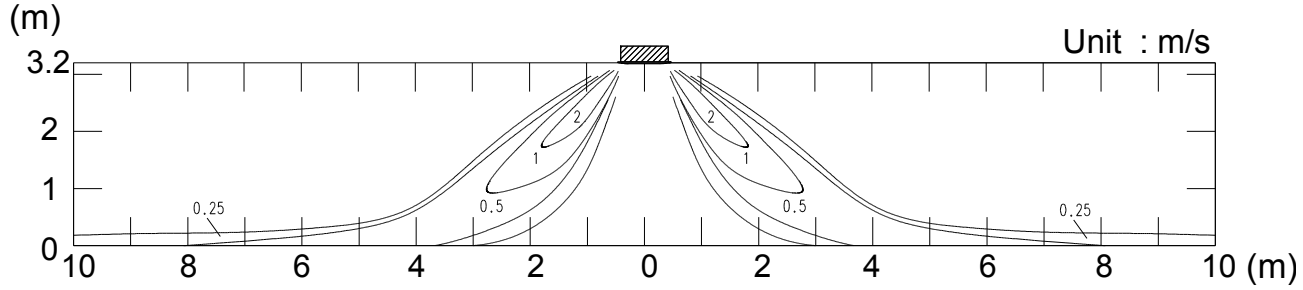

INDOOR UNITS

Conditions
Fan speed : High
Operation mode : Heat
Voltage : 230V
Reference Data

● Air velocity distribution

Side view
Vertical flap : Down

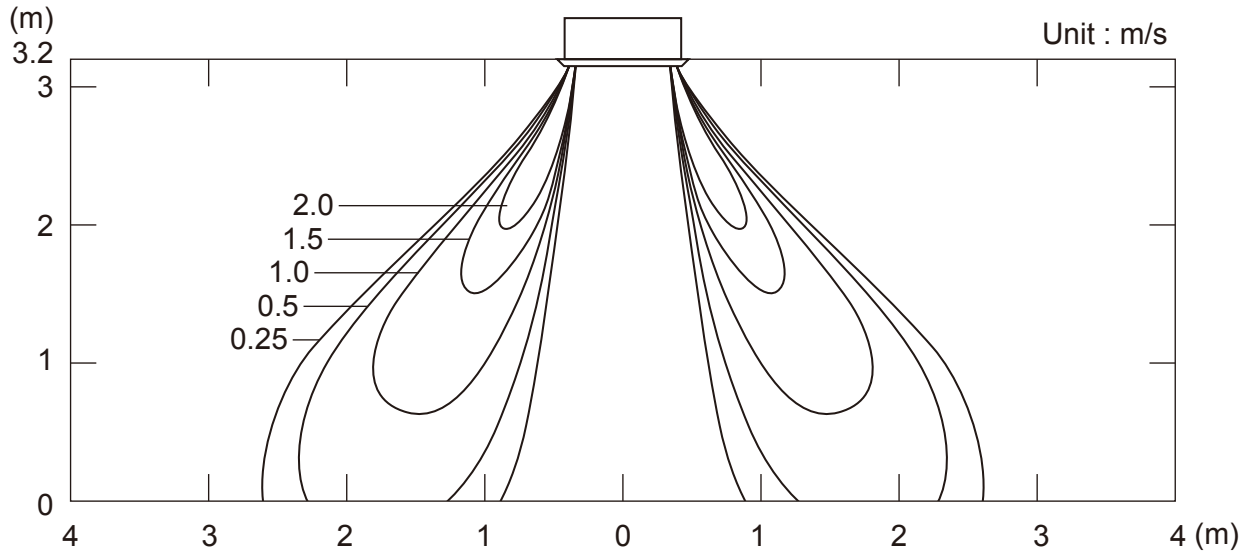

● Air temperature distribution

Side view
Vertical flap : Down

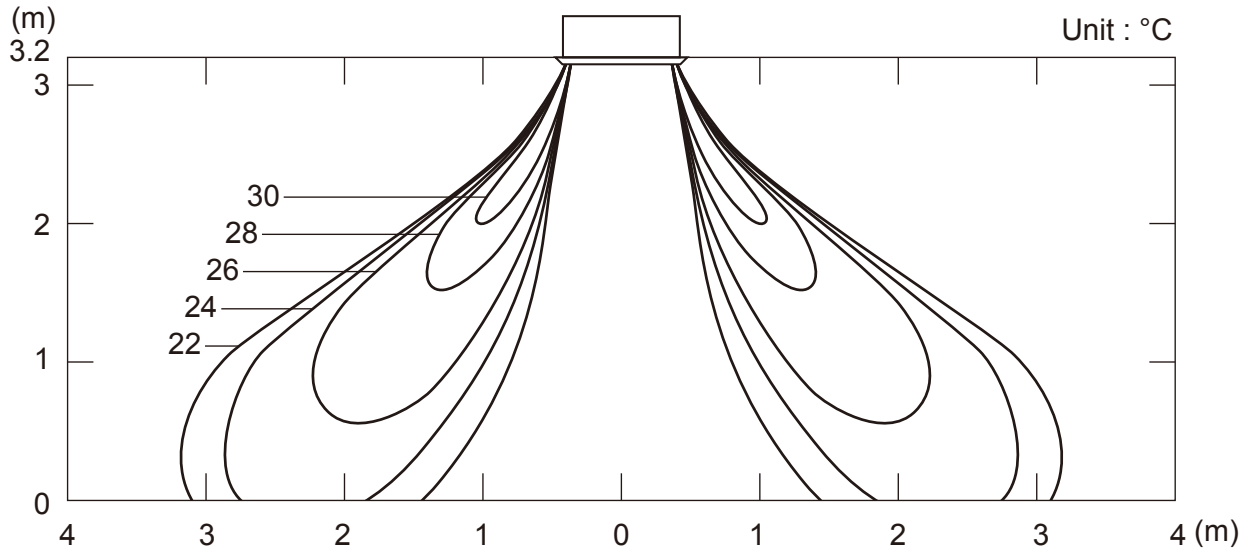

INDOOR UNITS

6-3. SLIM DUCT TYPE with Auto louver grille kit

■ MODEL : ARXD04GALH (UTD-GXSA-W)

Note: This data is measured with Auto louver grille kit (Optional parts).

● Air velocity distribution

Top view
Vertical flap : Up
Horizontal flap : Center

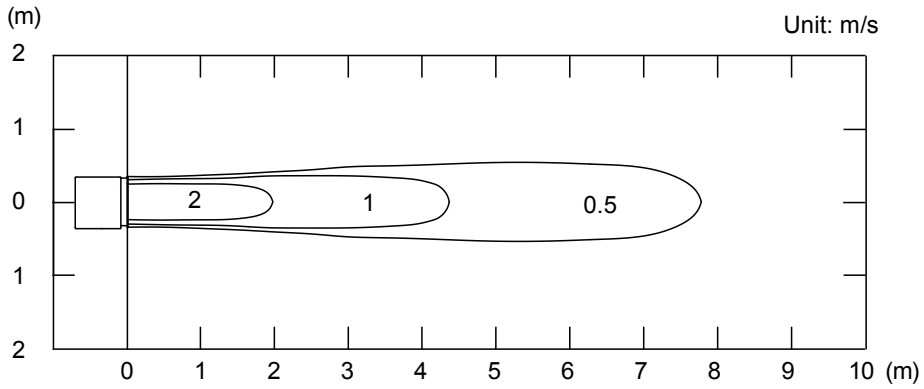

Top view
Vertical flap : Up
Horizontal flap : Right & Left

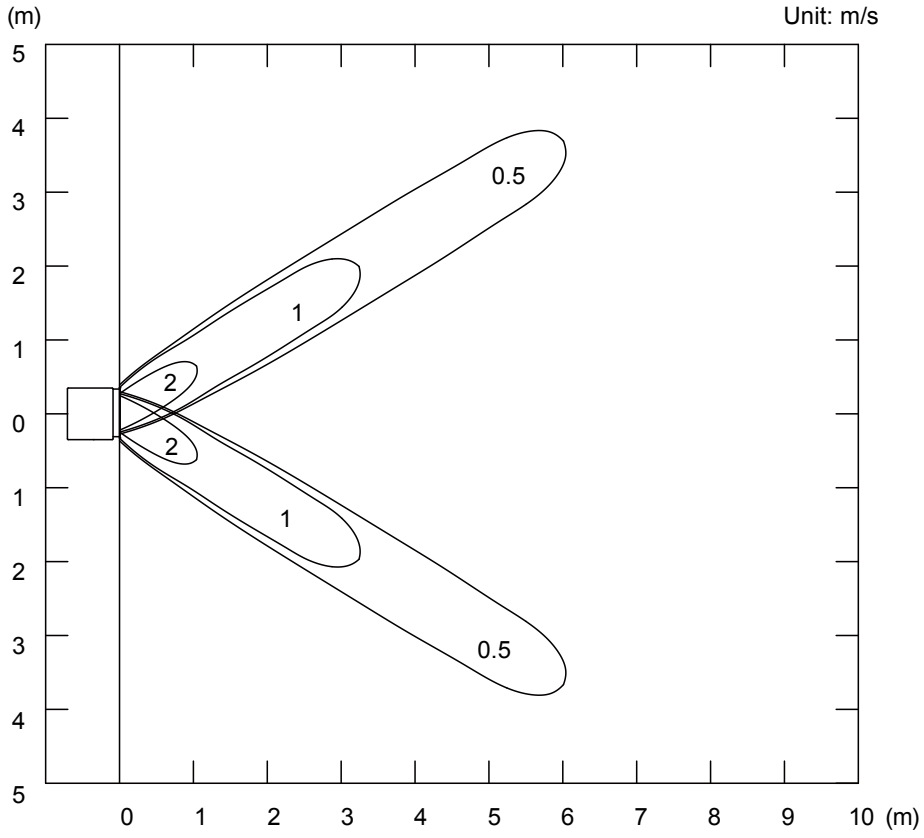

Side view
Vertical flap : Up
Horizontal flap : Center

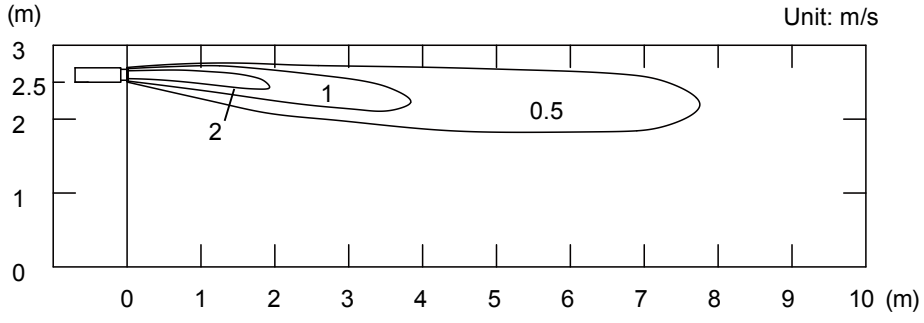

INDOOR UNITS

Note: This data is measured with Auto louver grille kit (Optional parts).

Conditions	
Fan speed	: High
Operation mode	: Heat
Voltage	: 230V
Reference Data	

● Air velocity distribution

Side view
Vertical flap : Down
Horizontal flap : Center

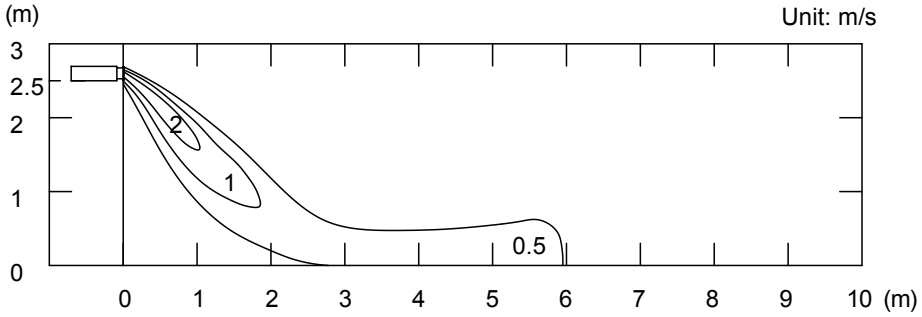

INDOOR UNITS

● Air temperature distribution

Side view
Vertical flap : Down
Horizontal flap : Center

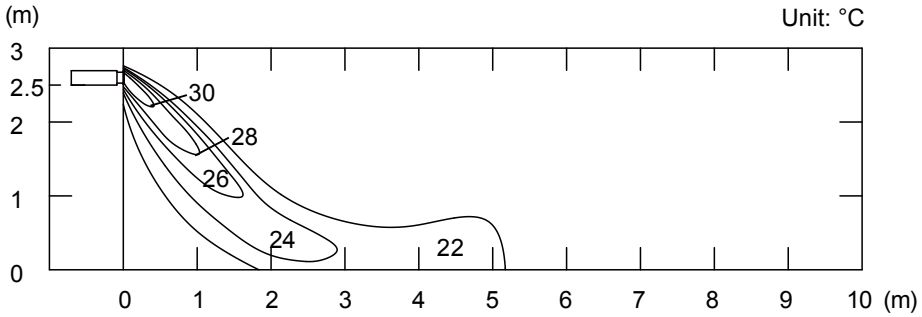

■ MODEL : ARXD07GALH (UTD-GXSA-W)

Note: This data is measured with Auto louver grille kit (Optional parts).

Conditions	
Fan speed	: High
Operation mode	: Fan
Voltage	: 230V

● Air velocity distribution

Top view
Vertical flap : Up
Horizontal flap : Center

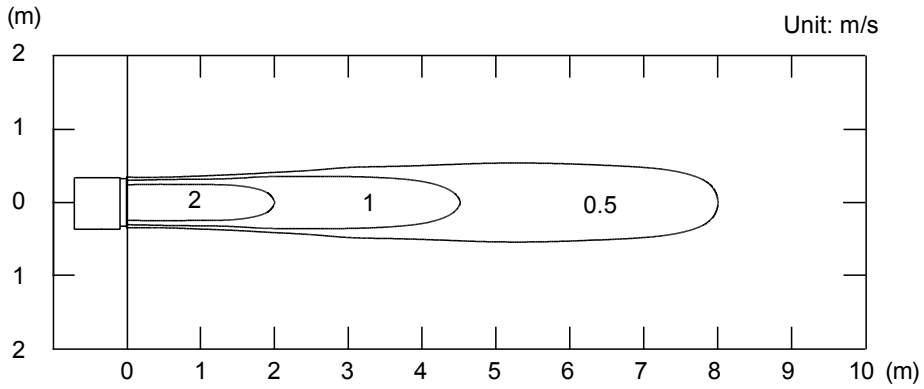

Top view
Vertical flap : Up
Horizontal flap : Right & Left

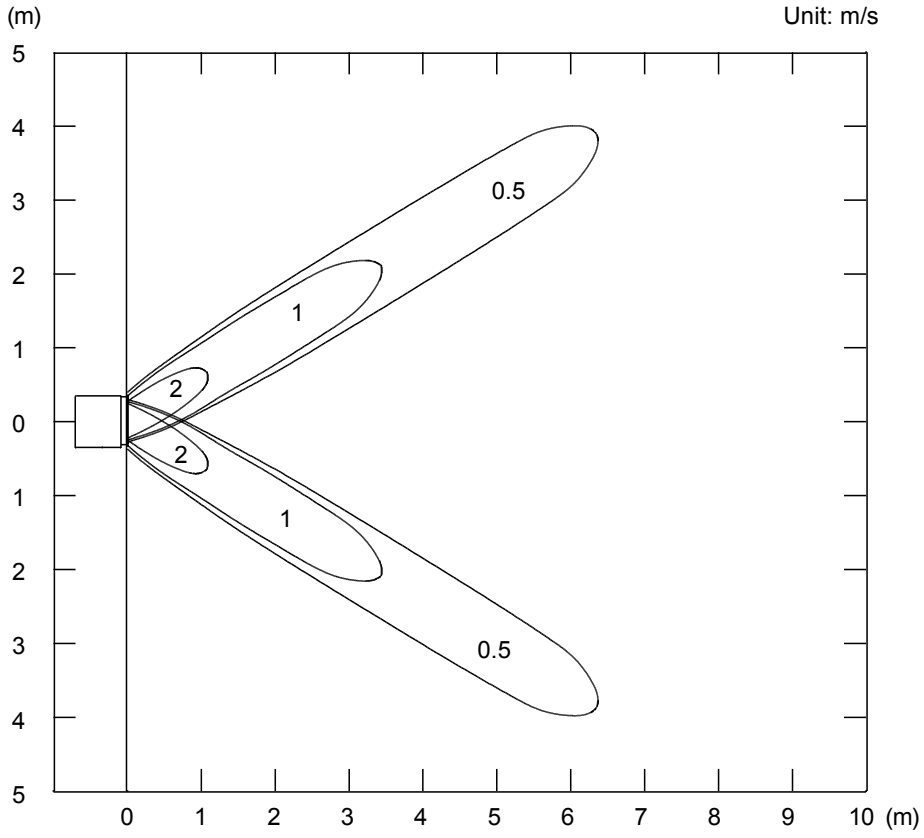

Side view
Vertical flap : Up
Horizontal flap : Center

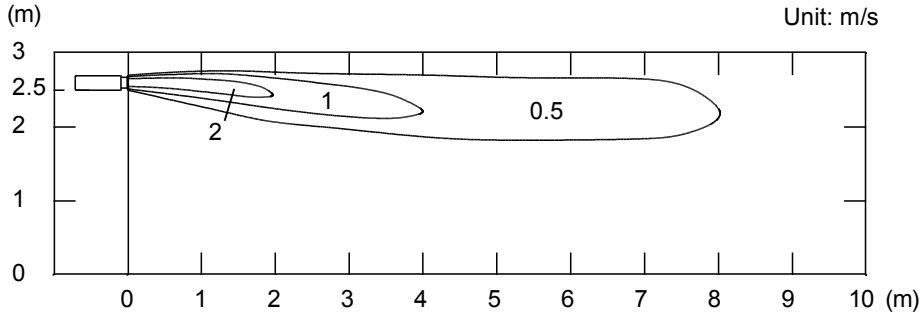

INDOOR UNITS

Note: This data is measured with Auto louver grille kit (Optional parts).

Conditions	
Fan speed	: High
Operation mode	: Heat
Voltage	: 230V
Reference Data	

● Air velocity distribution

Side view
Vertical flap : Down
Horizontal flap : Center

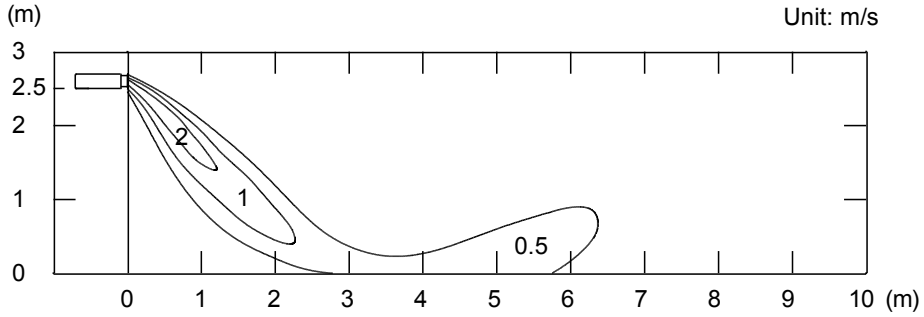

INDOOR UNITS

● Air temperature distribution

Side view
Vertical flap : Down
Horizontal flap : Center

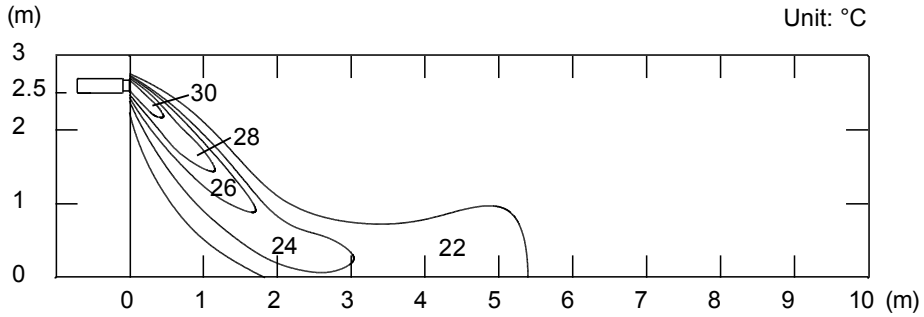

■ MODEL : ARXD09GALH (UTD-GXSA-W)

Note: This data is measured with Auto louver grille kit (Optional parts).

Conditions	
Fan speed	: High
Operation mode	: Fan
Voltage	: 230V

● Air velocity distribution

Top view
Vertical flap : Up
Horizontal flap : Center

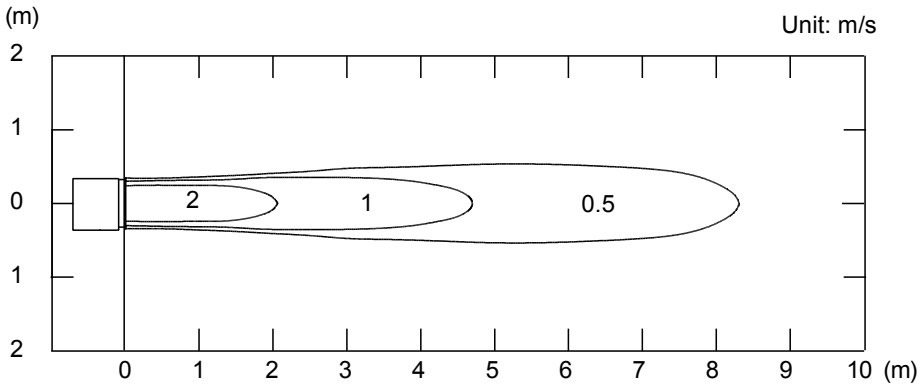

Top view
Vertical flap : Up
Horizontal flap : Right & Left

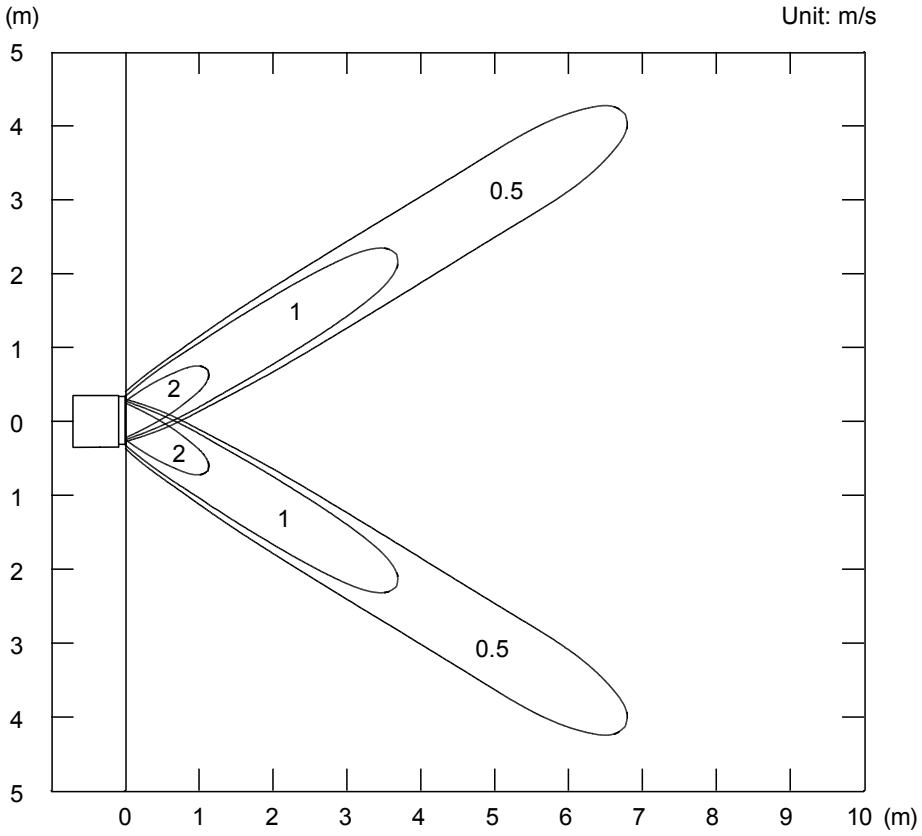

Side view
Vertical flap : Up
Horizontal flap : Center

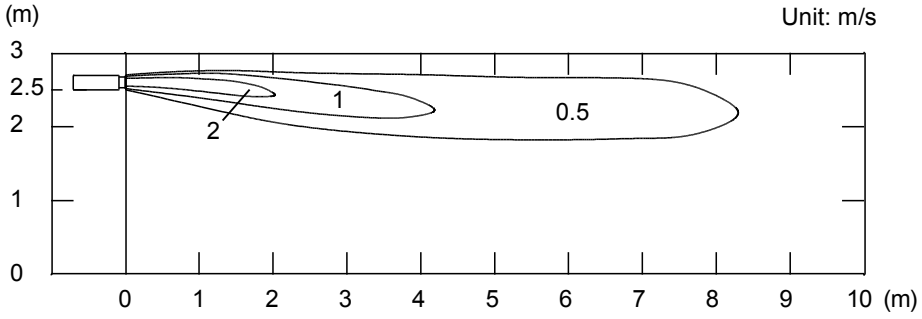

INDOOR UNITS

Note: This data is measured with Auto louver grille kit (Optional parts).

Conditions	
Fan speed	: High
Operation mode	: Heat
Voltage	: 230V
Reference Data	

● Air velocity distribution

Side view
Vertical flap : Down
Horizontal flap : Center

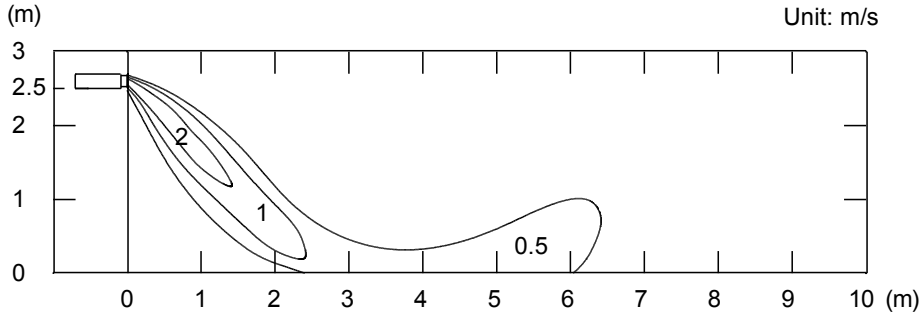

INDOOR UNITS

● Air temperature distribution

Side view
Vertical flap : Down
Horizontal flap : Center

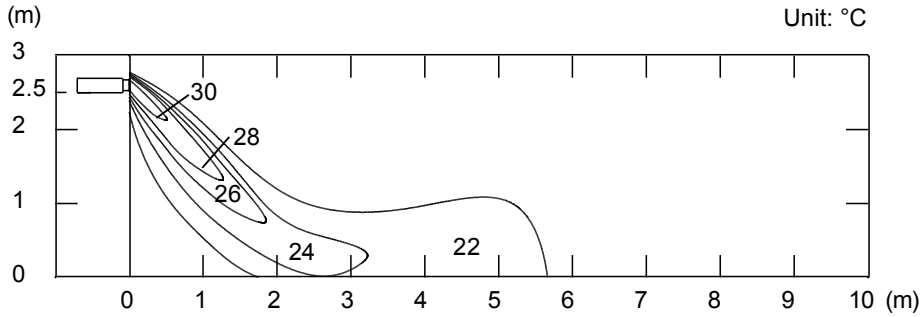

■ MODEL : ARXD12GALH (UTD-GXSA-W)

Note: This data is measured with Auto louver grille kit (Optional parts).

Conditions	
Fan speed	: High
Operation mode	: Fan
Voltage	: 230V

● Air velocity distribution

Top view
Vertical flap : Up
Horizontal flap : Center

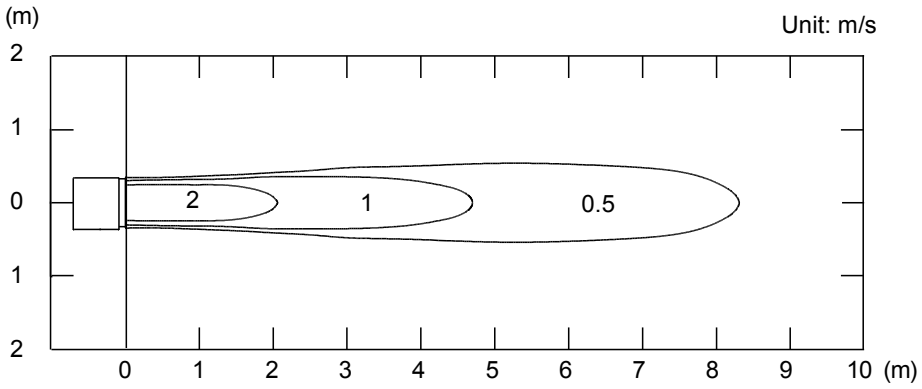

Top view
Vertical flap : Up
Horizontal flap : Right & Left

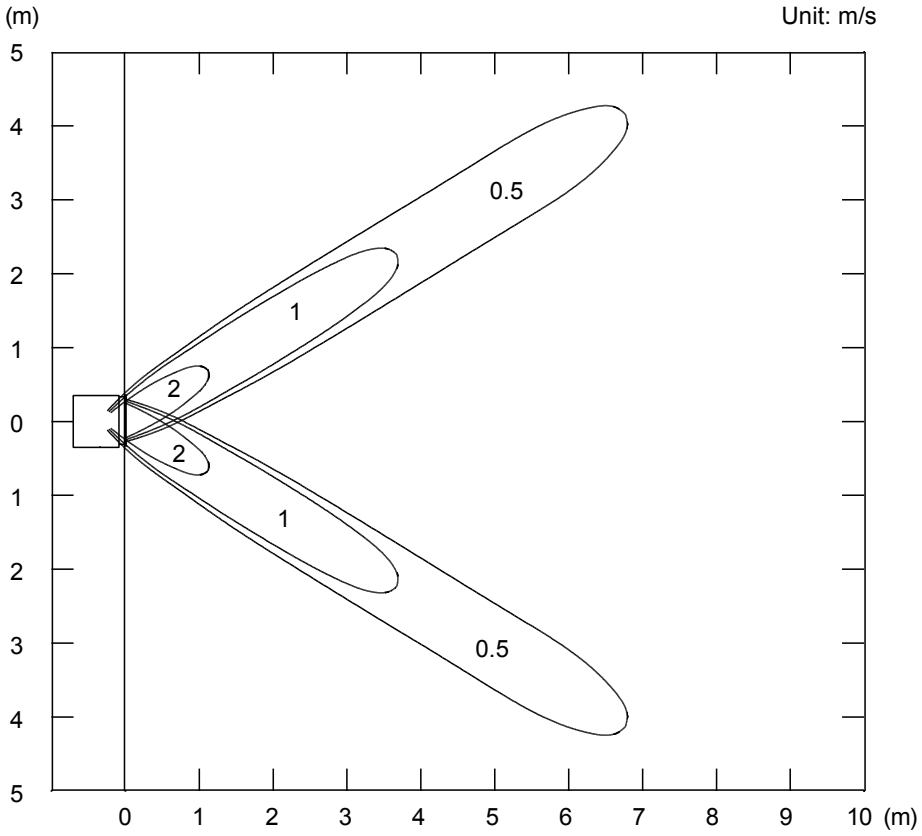

Side view
Vertical flap : Up
Horizontal flap : Center

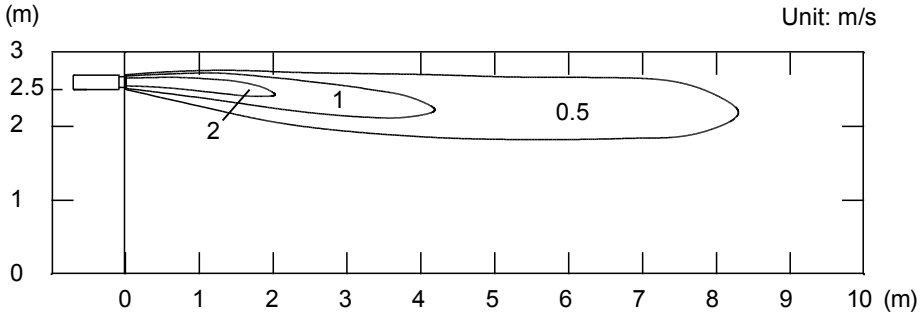

INDOOR UNITS

Note: This data is measured with Auto louver grille kit (Optional parts).

Conditions	
Fan speed	: High
Operation mode	: Heat
Voltage	: 230V
Reference Data	

● Air velocity distribution

Side view
Vertical flap : Down
Horizontal flap : Center

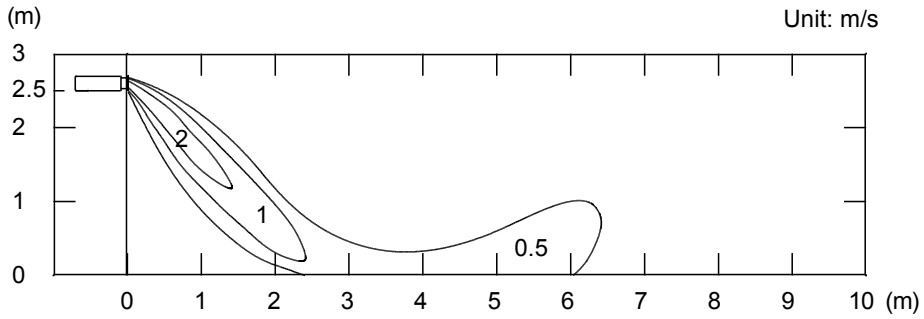

INDOOR UNITS

● Air temperature distribution

Side view
Vertical flap : Down
Horizontal flap : Center

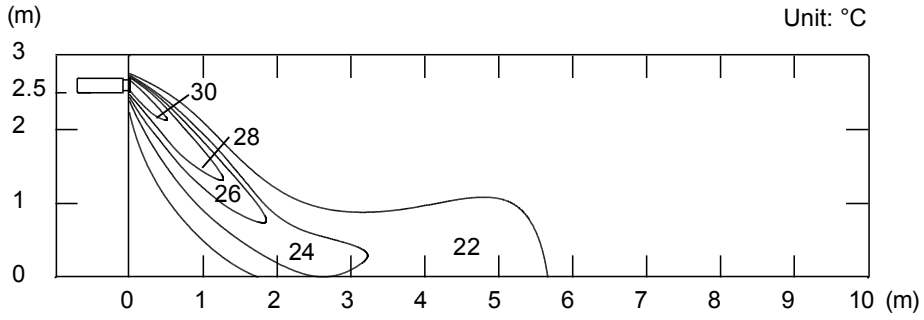

■ MODEL : ARXD14GALH (UTD-GXSA-W)

Note: This data is measured with Auto louver grille kit (Optional parts).

Conditions	
Fan speed	: High
Operation mode	: Fan
Voltage	: 230V

● Air velocity distribution

Top view
Vertical flap : Up
Horizontal flap : Center

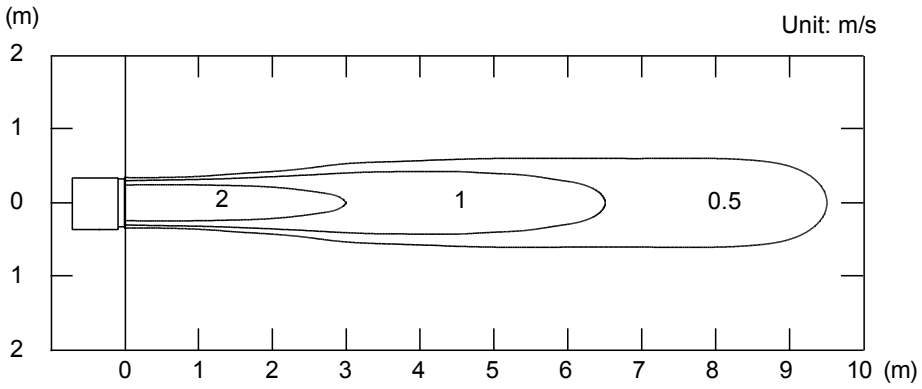

Top view
Vertical flap : Up
Horizontal flap : Right & Left

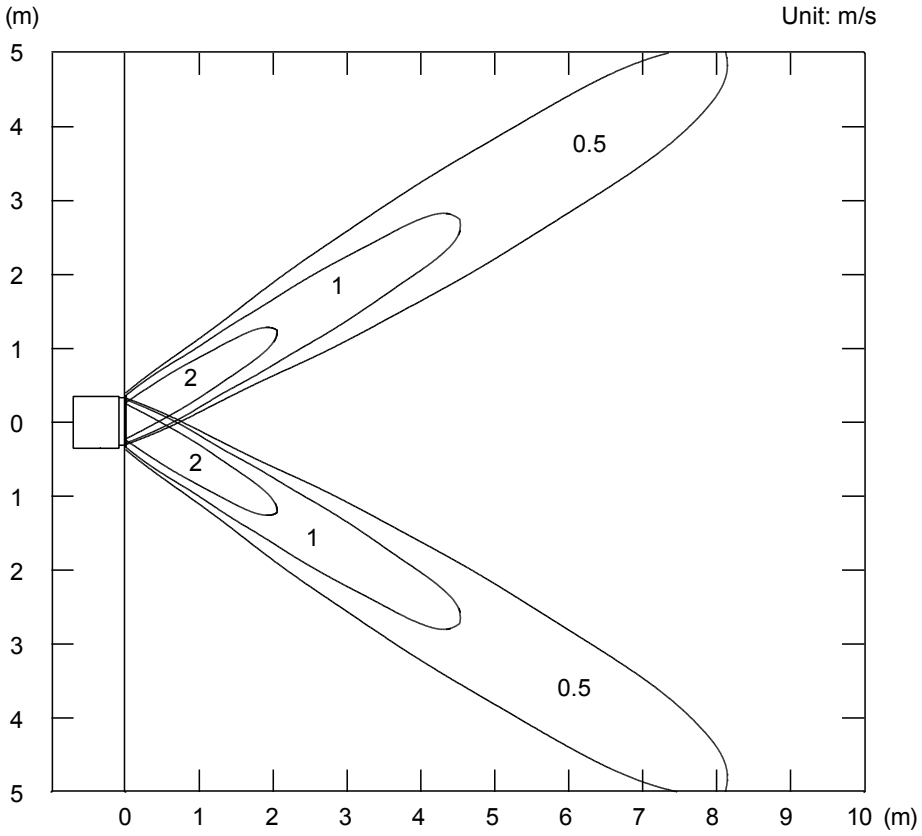

Side view
Vertical flap : Up
Horizontal flap : Center

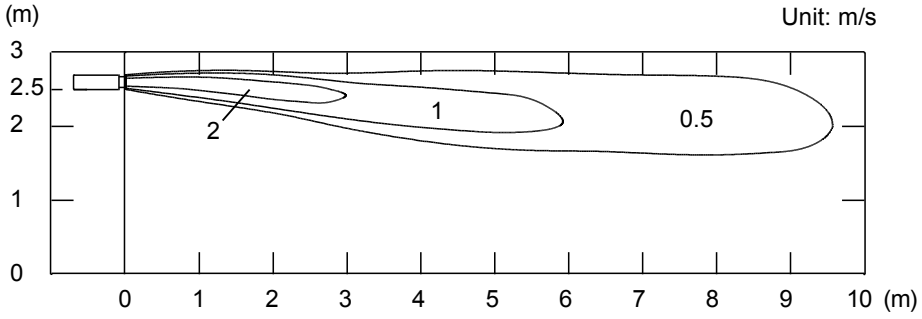

Note: This data is measured with Auto louver grille kit (Optional parts).

Conditions	
Fan speed	: High
Operation mode	: Heat
Voltage	: 230V
Reference Data	

● Air velocity distribution

Side view
Vertical flap : Down
Horizontal flap : Center

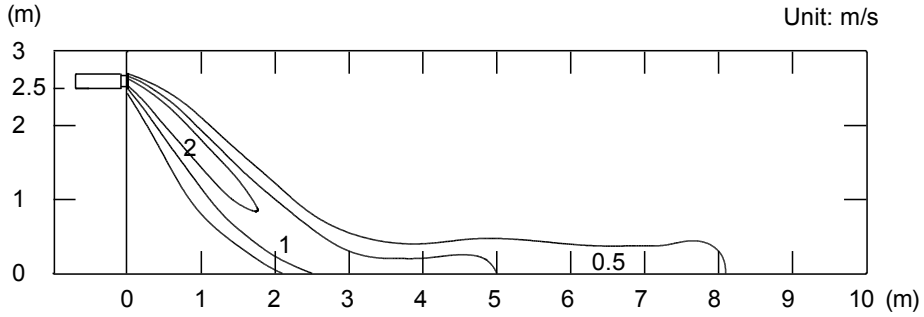

INDOOR UNITS

● Air temperature distribution

Side view
Vertical flap : Down
Horizontal flap : Center

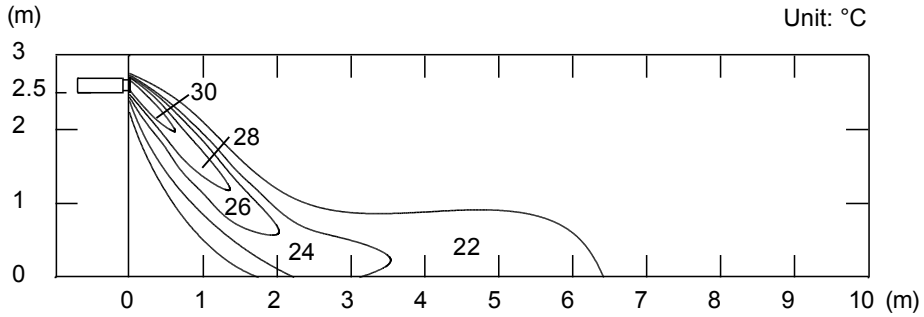

■ MODEL : ARXD18GALH (UTD-GXSB-W)

Note: This data is measured with Auto louver grille kit (Optional parts).

Conditions	
Fan speed	: High
Operation mode	: Fan
Voltage	: 230V

● Air velocity distribution

Top view
Vertical flap : Up
Horizontal flap : Center

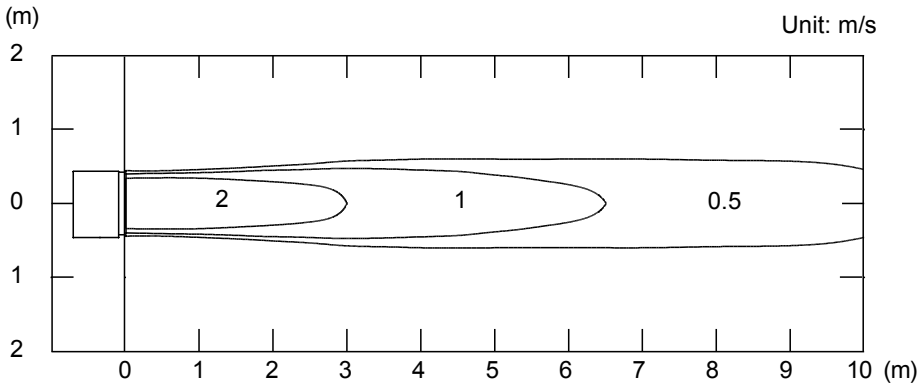

Top view
Vertical flap : Up
Horizontal flap : Right & Left

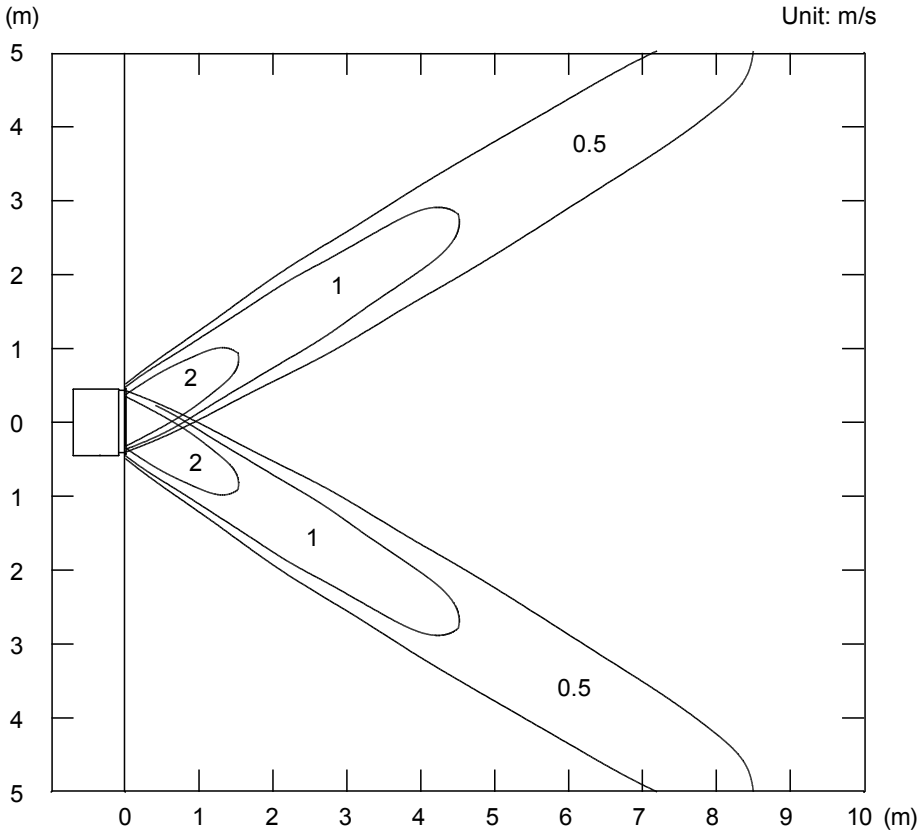

Side view
Vertical flap : Up
Horizontal flap : Center

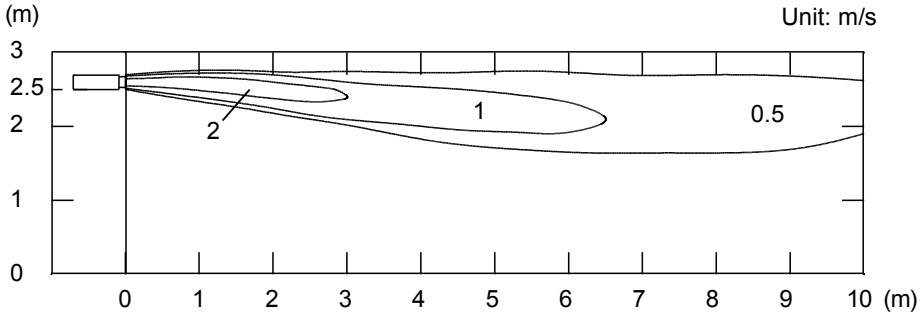

INDOOR UNITS

Note: This data is measured with Auto louver grille kit (Optional parts).

Conditions	
Fan speed	: High
Operation mode	: Heat
Voltage	: 230V
Reference Data	

● Air velocity distribution

Side view
Vertical flap : Down
Horizontal flap : Center

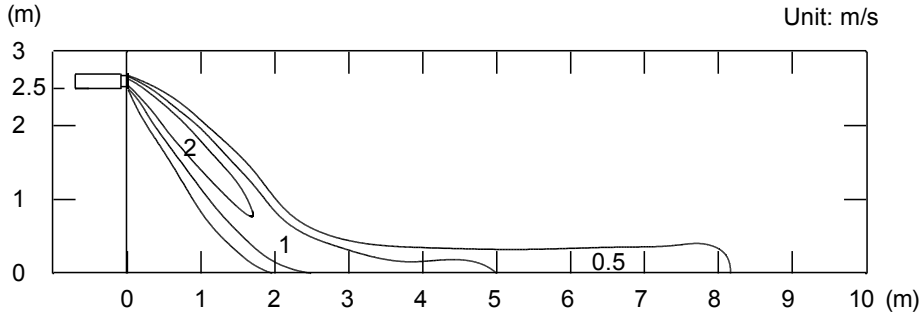

INDOOR UNITS

● Air temperature distribution

Side view
Vertical flap : Down
Horizontal flap : Center

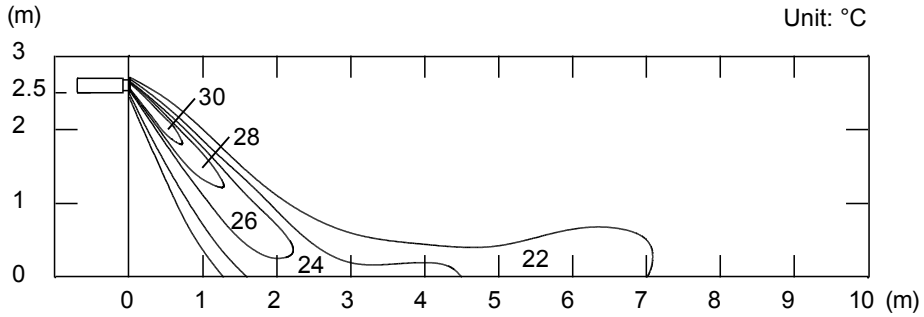

■ MODEL : ARXD24GALH (UTD-GXSC-W)

Note: This data is measured with Auto louver grille kit (Optional parts).

Conditions	
Fan speed	: High
Operation mode	: Fan
Voltage	: 230V

● Air velocity distribution

Top view
Vertical flap : Up
Horizontal flap : Center

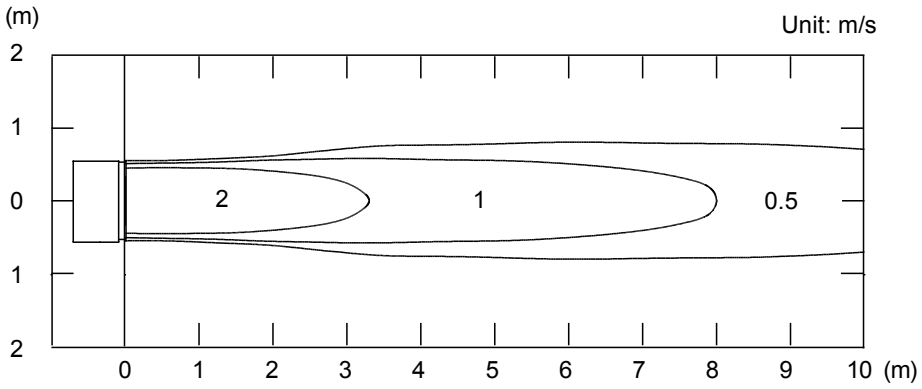

Top view
Vertical flap : Up
Horizontal flap : Right & Left

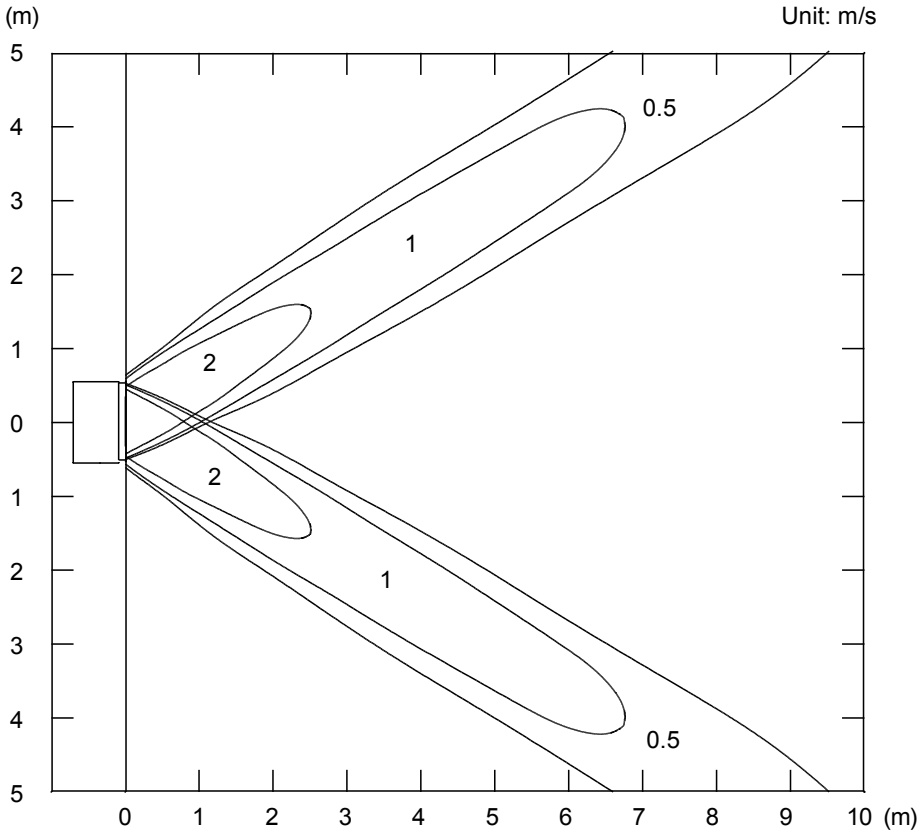

Side view
Vertical flap : Up
Horizontal flap : Center

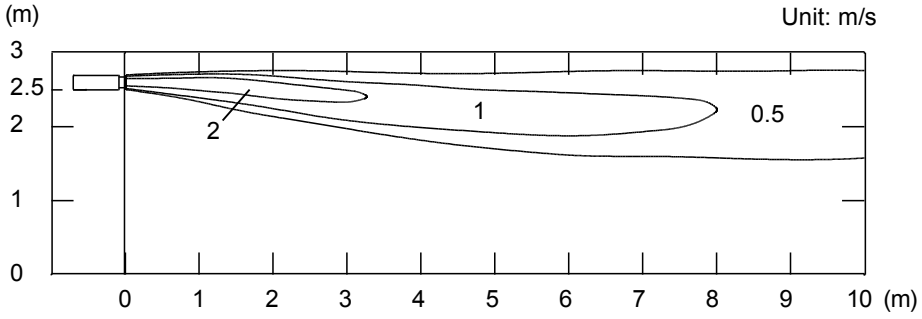

INDOOR UNITS

Note: This data is measured with Auto louver grille kit (Optional parts).

Conditions	
Fan speed	: High
Operation mode	: Heat
Voltage	: 230V
Reference Data	

● Air velocity distribution

Side view
Vertical flap : Down
Horizontal flap : Center

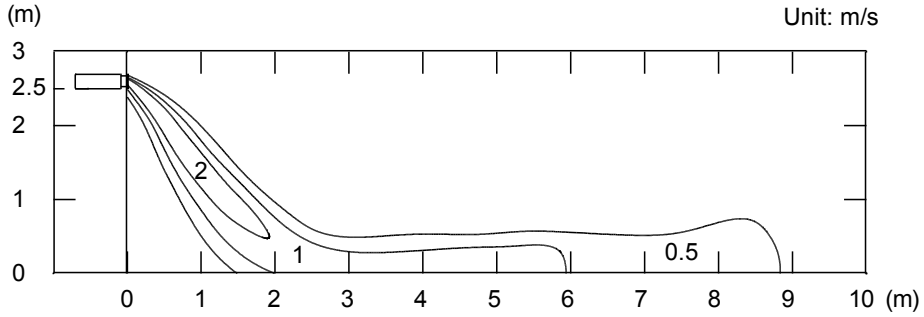

INDOOR UNITS

● Air temperature distribution

Side view
Vertical flap : Down
Horizontal flap : Center

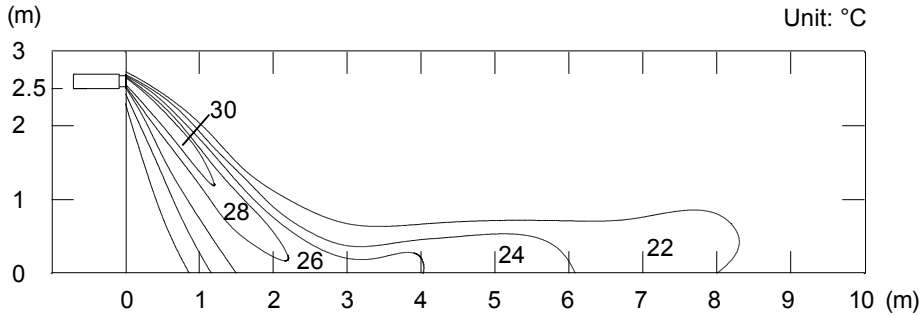

6-4. FLOOR / CEILING TYPE

■ MODELS : AB∗A12GATH, AB∗A14GATH (FLOOR CONSOLE)

Conditions	
Fan speed	: High
Operation mode	: Fan
Voltage	: 230V

Top view
Vertical flap : Down
Horizontal flap : Center

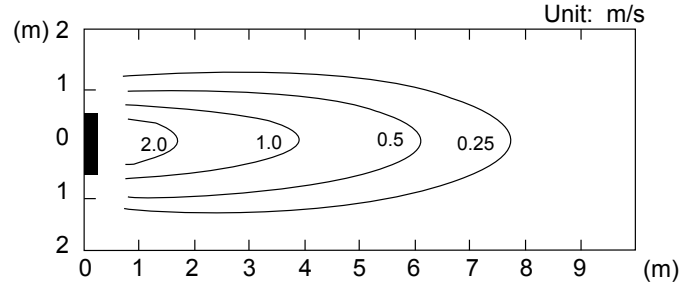

Top view
Vertical flap : Down
Horizontal flap : Right & Left

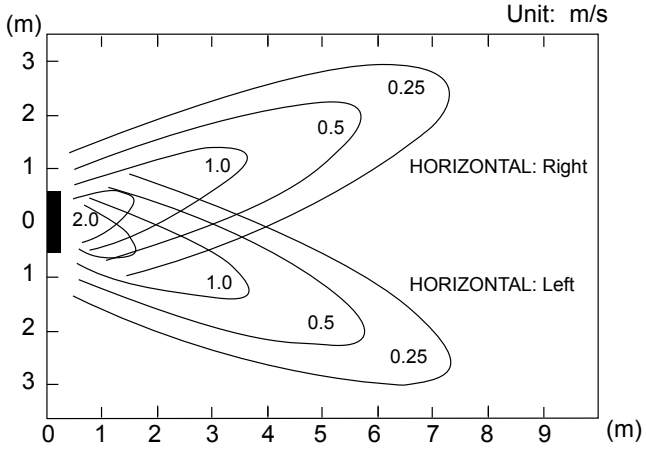

Side view
Vertical flap : Down
Horizontal flap : Center

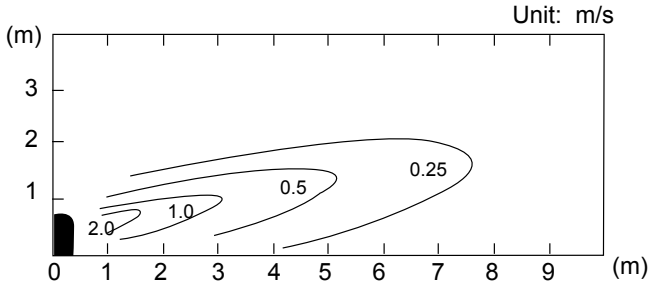

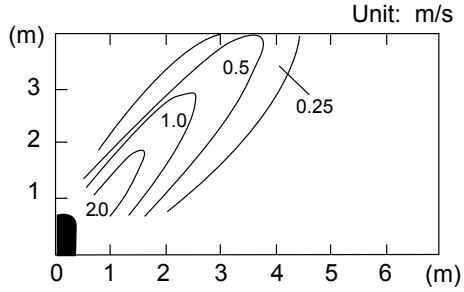

Side view
Vertical flap : Center
Horizontal flap : Center

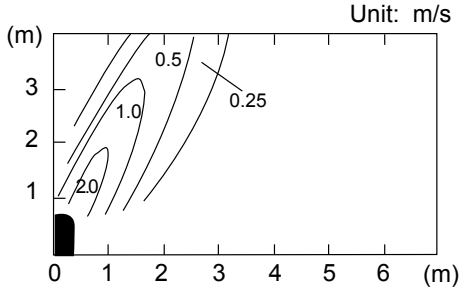

Side view
Vertical flap : Up
Horizontal flap : Center

■ MODELS : AB∗A12GATH, AB∗A14GATH (UNDER CEILING)

Conditions
Fan speed : High
Operation mode : Fan
Voltage : 230V

Top view
Vertical flap : Up
Horizontal flap : Center

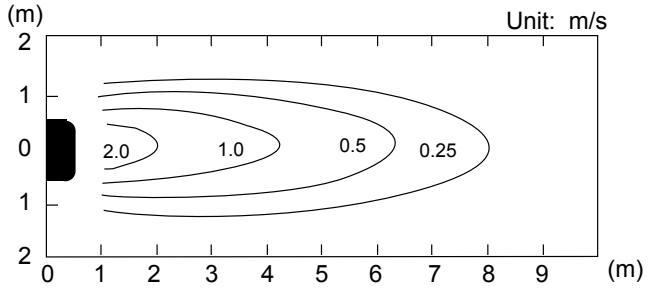

Top view
Vertical flap : Up
Horizontal flap : Right & Left

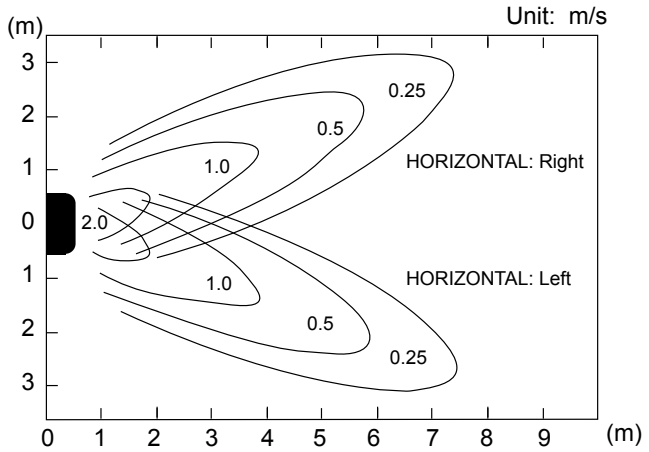

Side view
Vertical flap : Up
Horizontal flap : Center

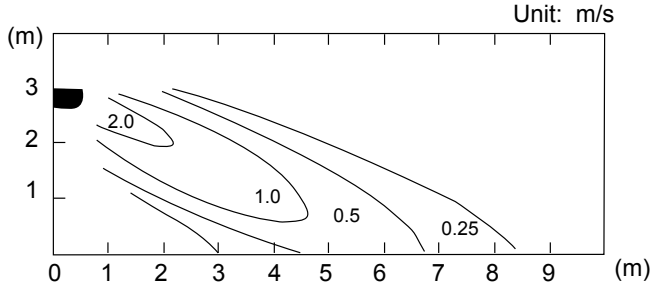

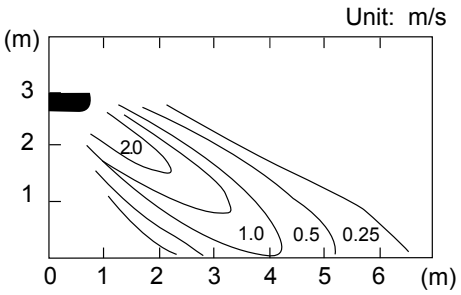

Side view
Vertical flap : Center
Horizontal flap : Center

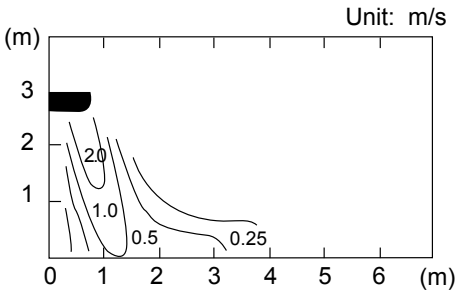

Side view
Vertical flap : Down
Horizontal flap : Center

■ MODEL : AB∗A18GATH (FLOOR CONSOLE)

Conditions	
Fan speed	: High
Operation mode	: Fan
Voltage	: 230V

Top view
Vertical flap : Down
Horizontal flap : Center

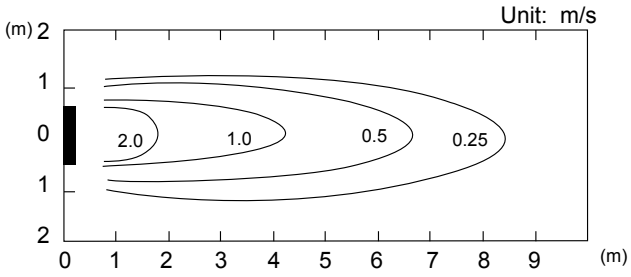

Top view
Vertical flap : Down
Horizontal flap : Right & Left

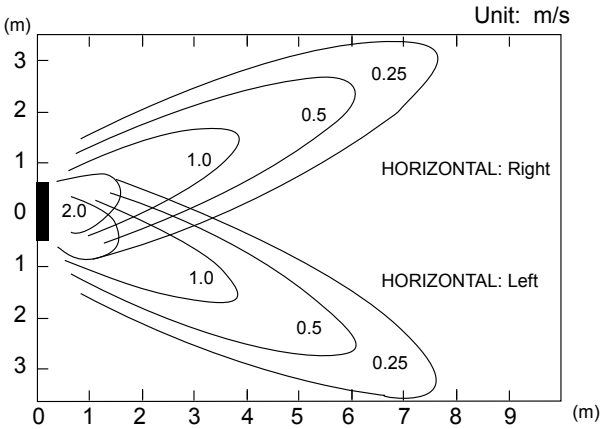

Side view
Vertical flap : Down
Horizontal flap : Center

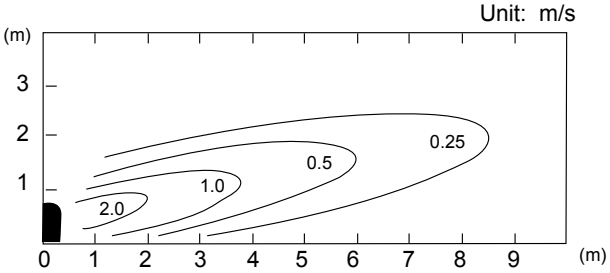

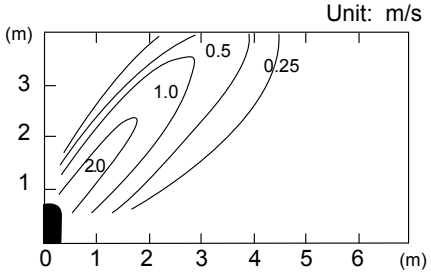

Side view
Vertical flap : Center
Horizontal flap : Center

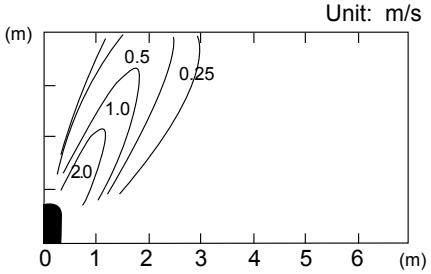

Side view
Vertical flap : Up
Horizontal flap : Center

■ MODEL : AB∗A18GATH (UNDER CEILING)

Conditions
Fan speed : High
Operation mode : Fan
Voltage : 230V

Top view
Vertical flap : Up
Horizontal flap : Center

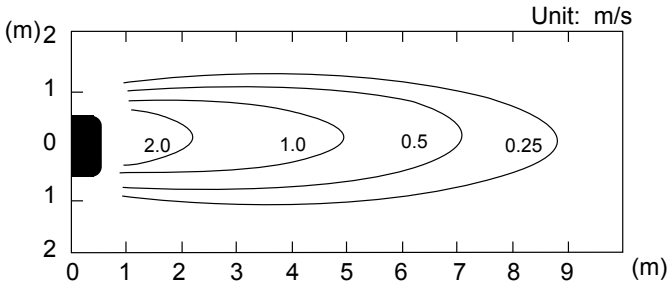

Top view
Vertical flap : Up
Horizontal flap : Right & Left

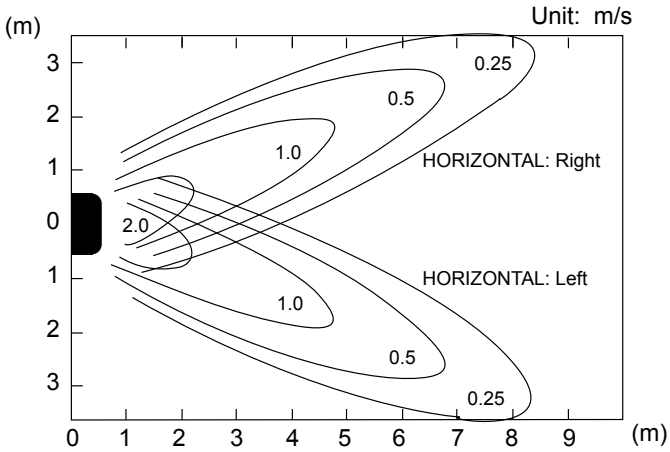

Side view
Vertical flap : Up
Horizontal flap : Center

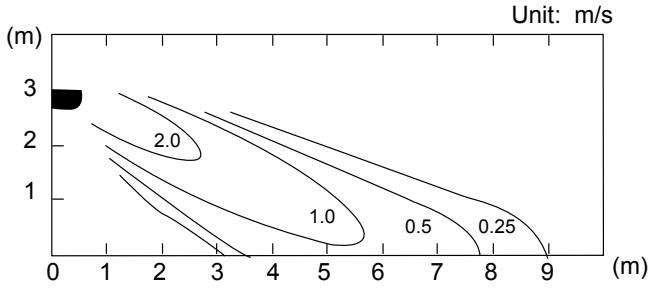

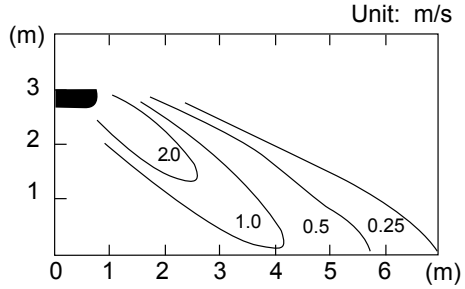

Side view
Vertical flap : Center
Horizontal flap : Center

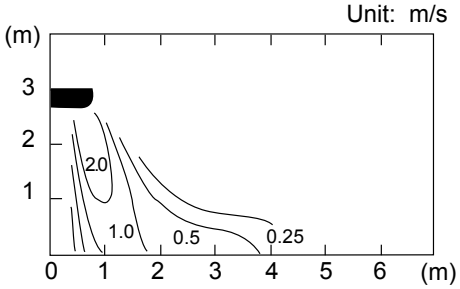

Side view
Vertical flap : Down
Horizontal flap : Center

■ MODEL : AB∗A24GATH (FLOOR CONSOLE)

Conditions
Fan speed : High
Operation mode : Fan
Voltage : 230V

Top view
Vertical flap : Down
Horizontal flap : Center

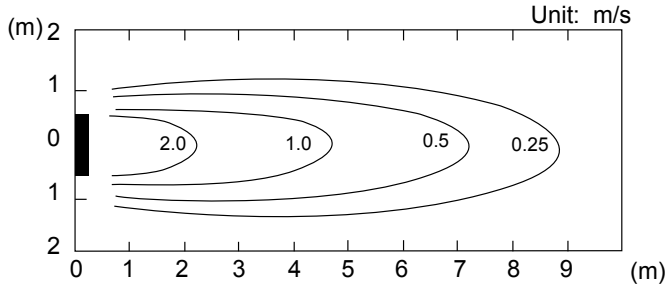

Top view
Vertical flap : Down
Horizontal flap : Right & Left

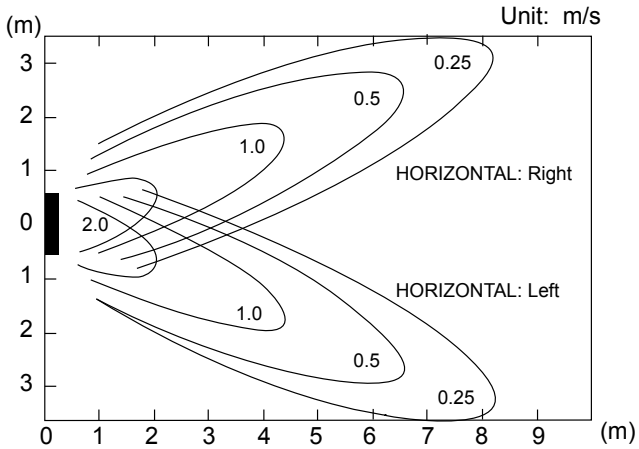

Side view
Vertical flap : Down
Horizontal flap : Center

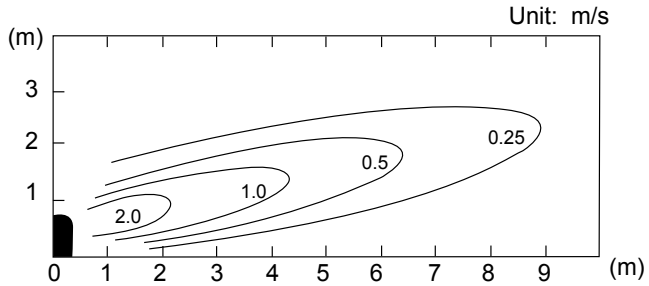

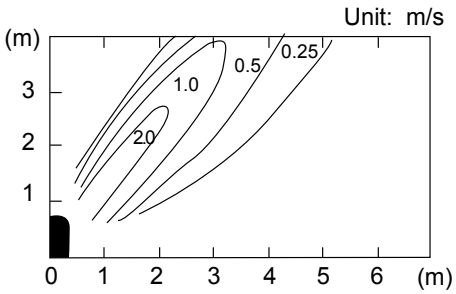

Side view
Vertical flap : Center
Horizontal flap : Center

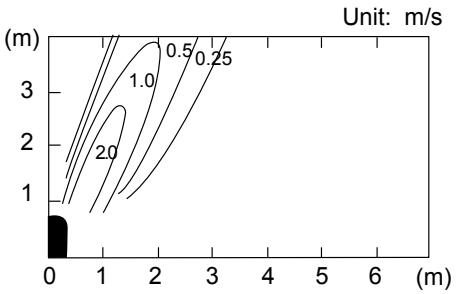

Side view
Vertical flap : Up
Horizontal flap : Center

■ MODEL : AB∗A24GATH (UNDER CEILING)

Conditions
Fan speed : High
Operation mode : Fan
Voltage : 230V

Top view
Vertical flap : Up
Horizontal flap : Center

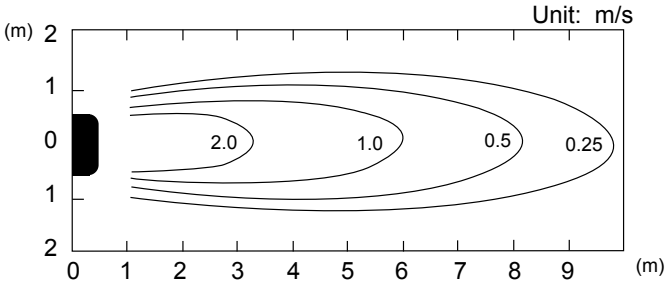

Top view
Vertical flap : Up
Horizontal flap : Right & Left

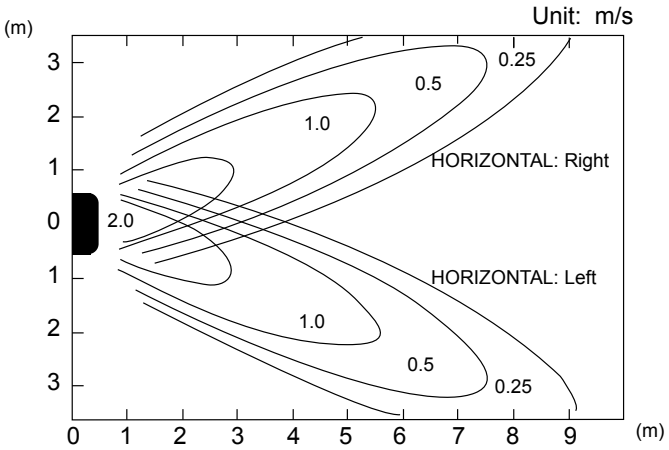

Side view
Vertical flap : Up
Horizontal flap : Center

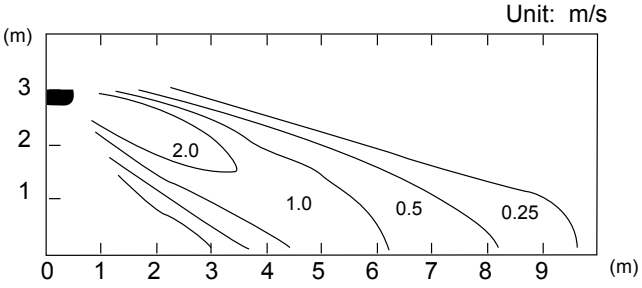

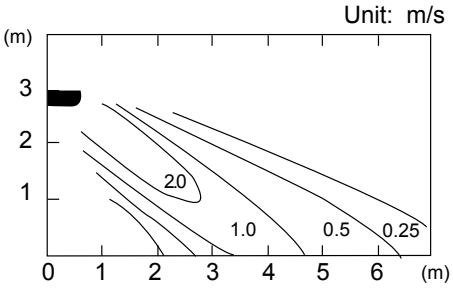

Side view
Vertical flap : Center
Horizontal flap : Center

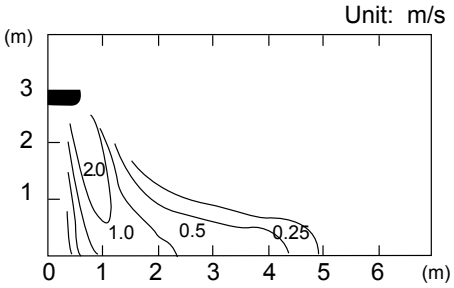

Side view
Vertical flap : Down
Horizontal flap : Center

6-5. CEILING TYPE

■ MODEL : AB∗A30GATH

Conditions
Fan speed : High
Operation mode : Fan
Voltage : 230V

Top view
Vertical flap : Up
Horizontal flap : Center

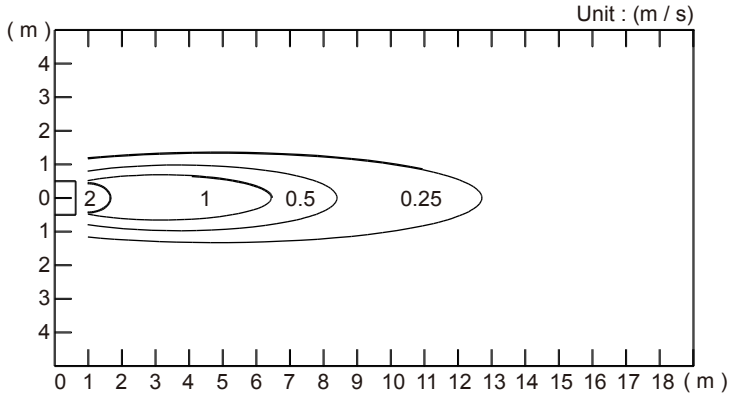

Top view
Vertical flap : Up
Horizontal flap : Right & Left

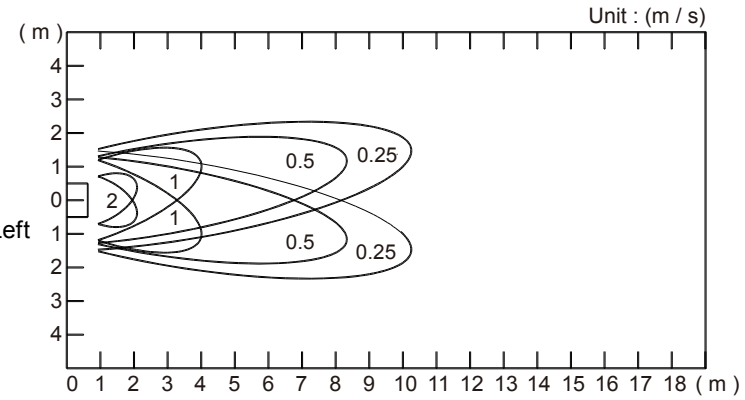

Side view
Vertical flap : Up
Horizontal flap : Center

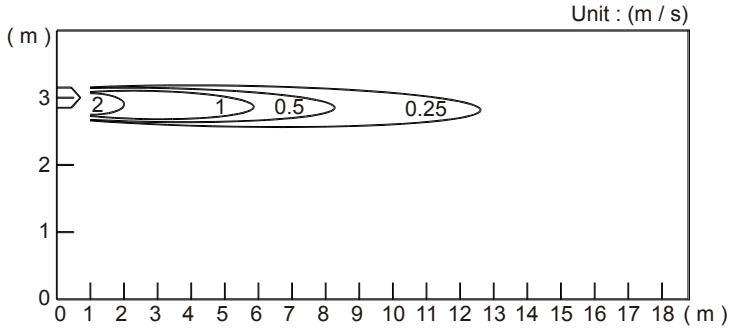

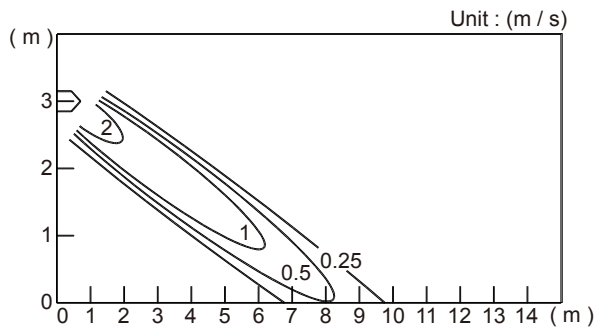

Side view
Vertical flap : Center
Horizontal flap : Center

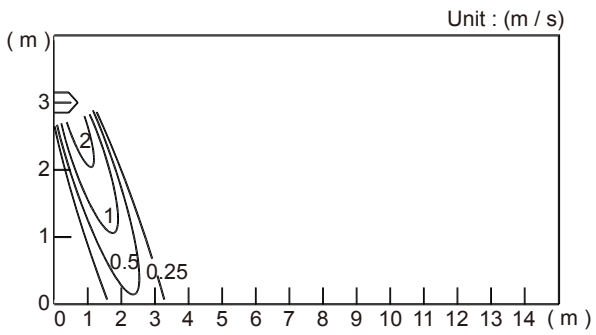

Side view
Vertical flap : Down
Horizontal flap : Center

■ MODEL : AB∗A36GATH

Conditions
Fan speed : High
Operation mode : Fan
Voltage : 230V

Top view
Vertical flap : Up
Horizontal flap : Center

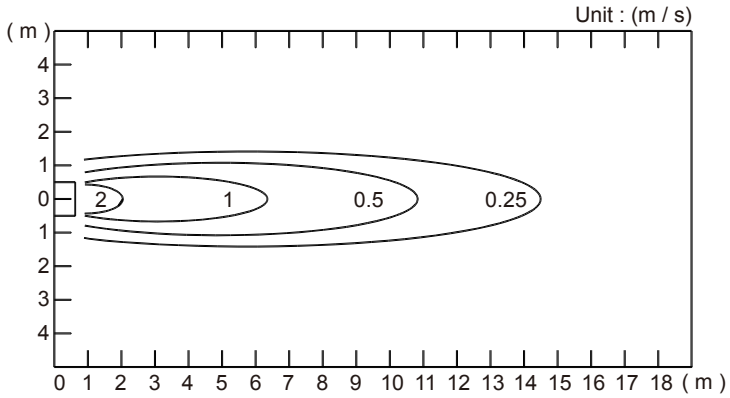

Top view
Vertical flap : Up
Horizontal flap : Right & Left

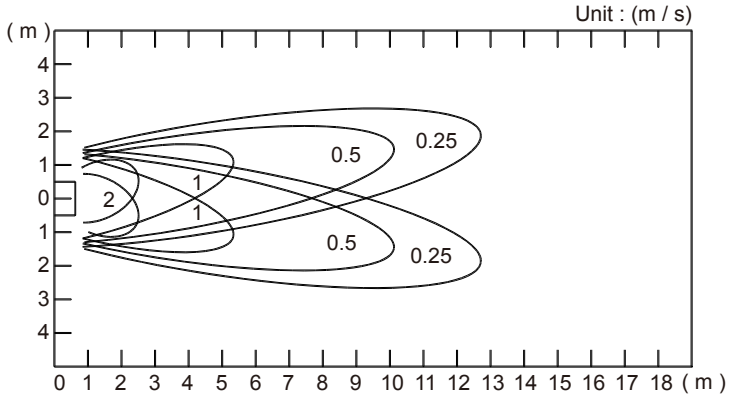

Side view
Vertical flap : Up
Horizontal flap : Center

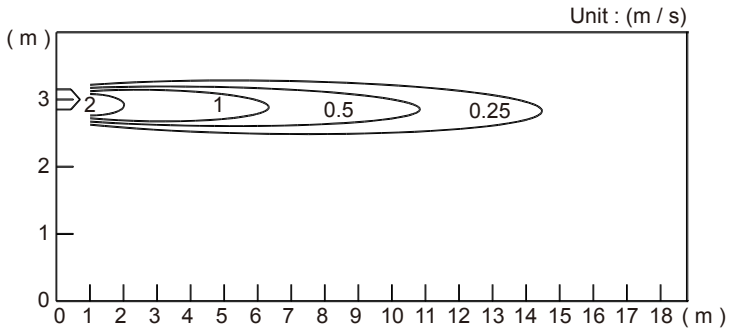

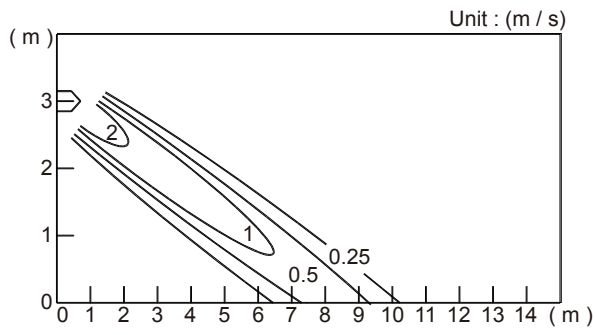

Side view
Vertical flap : Center
Horizontal flap : Center

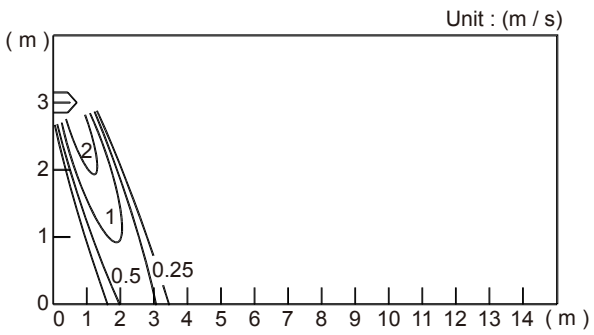

Side view
Vertical flap : Down
Horizontal flap : Center

■ MODEL : AB∗A45GATH

Conditions
Fan speed : High
Operation mode : Fan
Voltage : 230V

Top view
Vertical flap : Up
Horizontal flap : Center

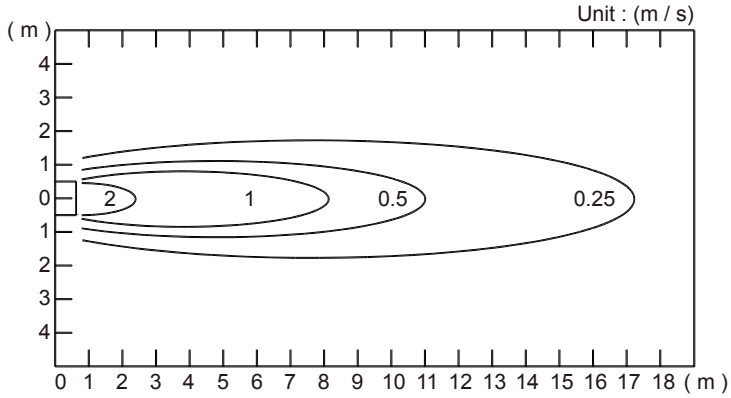

Top view
Vertical flap : Up
Horizontal flap : Right & Left

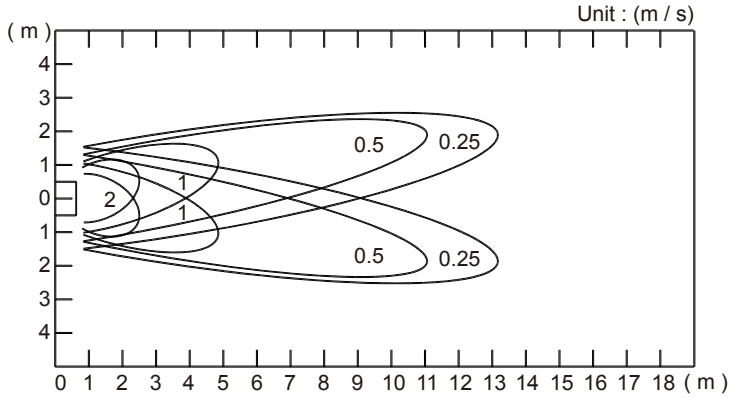

Side view
Vertical flap : Up
Horizontal flap : Center

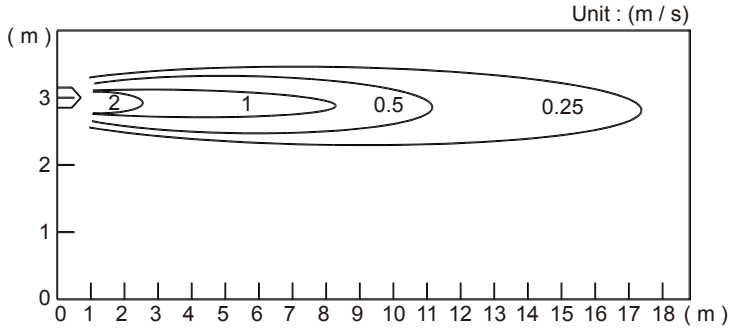

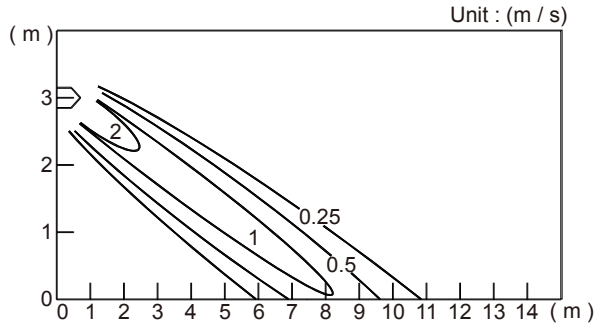

Side view
Vertical flap : Center
Horizontal flap : Center

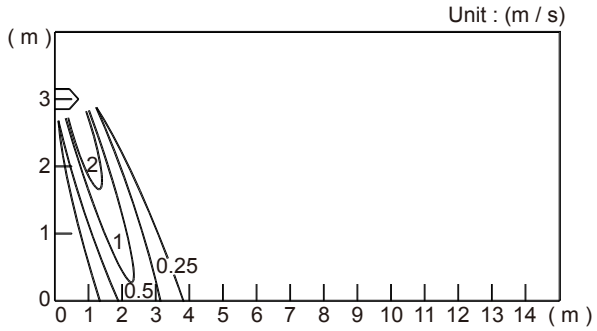

Side view
Vertical flap : Down
Horizontal flap : Center

■ MODEL : AB∗A54GATH

Conditions
Fan speed : High
Operation mode : Fan
Voltage : 230V

Top view
Vertical flap : Up
Horizontal flap : Center

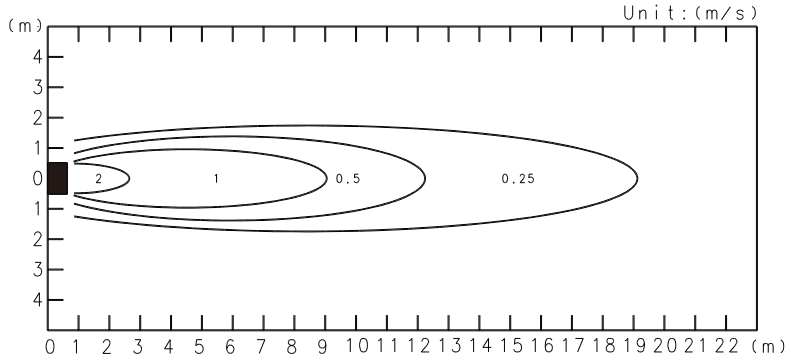

Top view
Vertical flap : Up
Horizontal flap : Right & Left

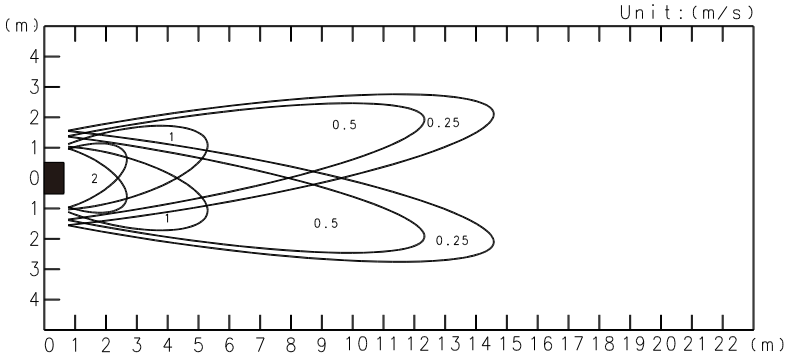

Side view
Vertical flap : Up
Horizontal flap : Center

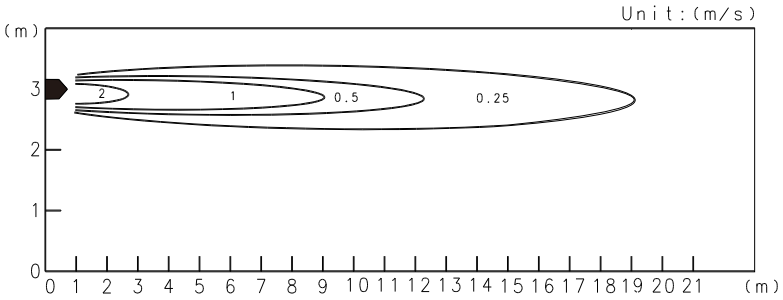

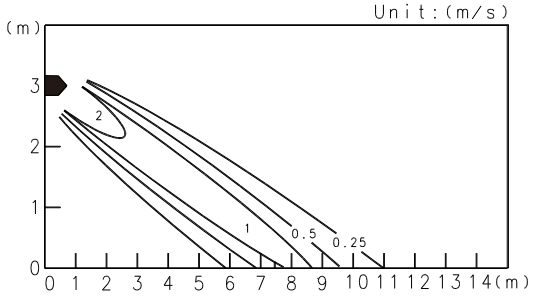

Side view
Vertical flap : Center
Horizontal flap : Center

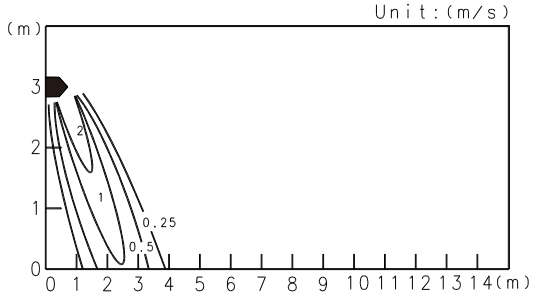

Side view
Vertical flap : Down
Horizontal flap : Center

6-6. WALL MOUNTED TYPE

■ MODEL : AS∗A04GACH

Conditions
Fan speed : High
Operation mode : Fan
Voltage : 230V

Top view
Vertical flap : Up
Horizontal flap : Center

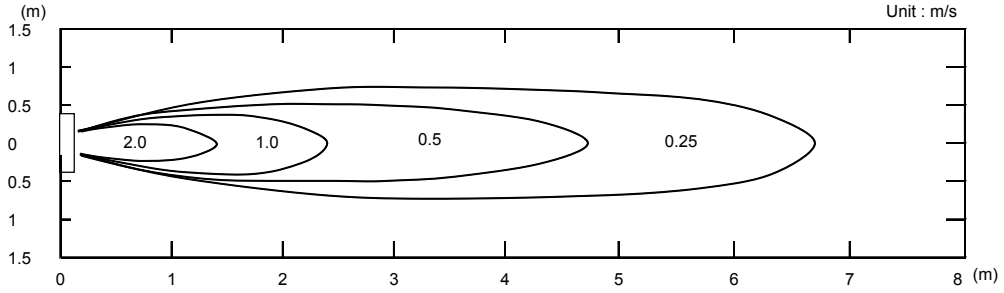

INDOOR UNITS

Top view
Vertical flap : Up
Horizontal flap : Right & Left

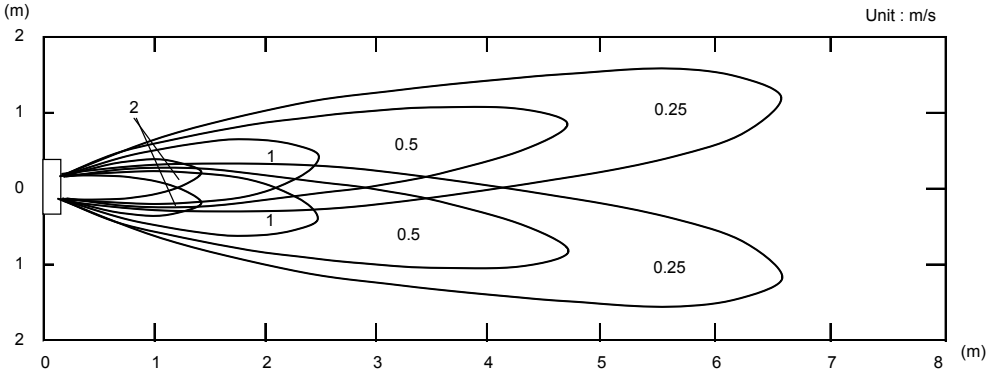

Side view
Vertical flap : Up
Horizontal flap : Center

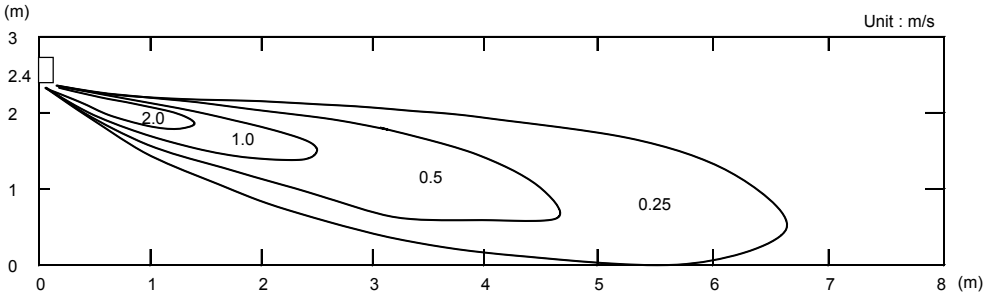

Conditions
Fan speed : High
Operation mode : Fan
Voltage : 230V

Side view
Vertical flap : Down
Horizontal flap : Center

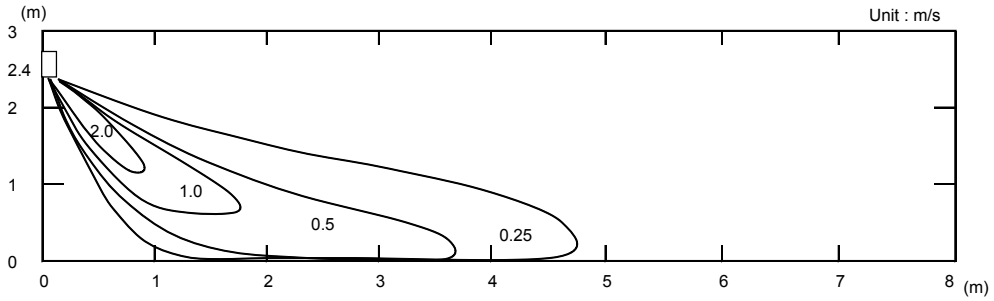

INDOOR UNITS

Conditions
Fan speed : High
Operation mode : Heat
Voltage : 230V
Reference Data

Side view
Vertical flap : Down
Horizontal flap : Center

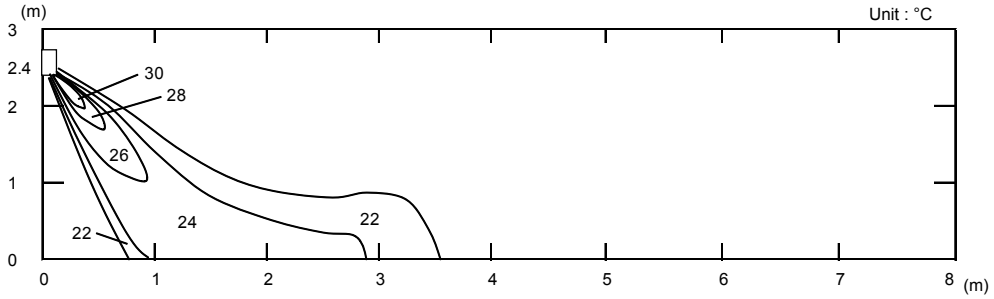

■ MODELS : AS∗A07GACH, AS∗A09GACH

Conditions
Fan speed : High
Operation mode : Fan
Voltage : 230V

Top view
Vertical flap : Up
Horizontal flap : Center

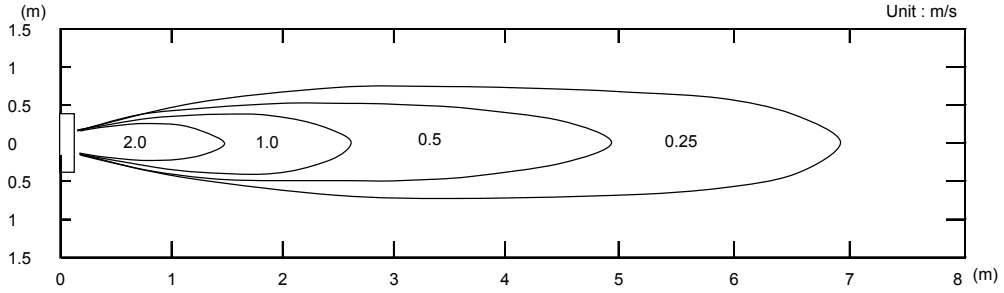

Top view
Vertical flap : Up
Horizontal flap : Right & Left

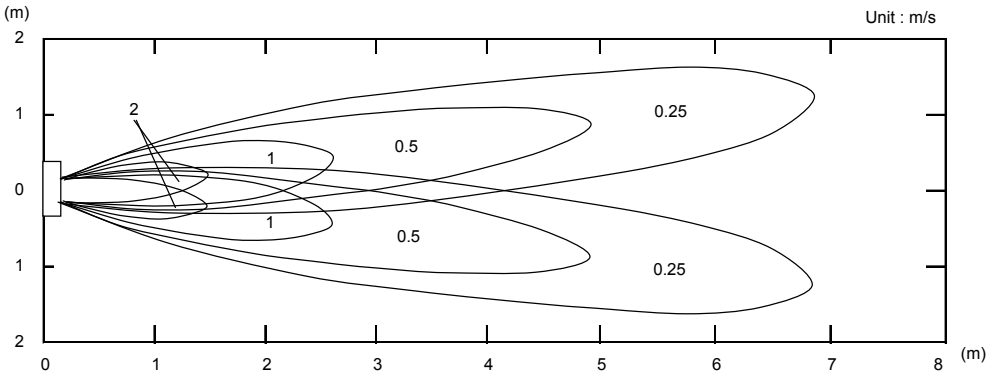

Side view
Vertical flap : Up
Horizontal flap : Center

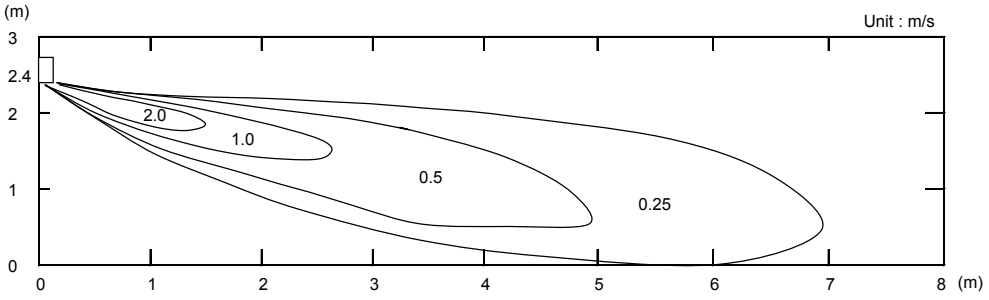

Side view
Vertical flap : Down
Horizontal flap : Center

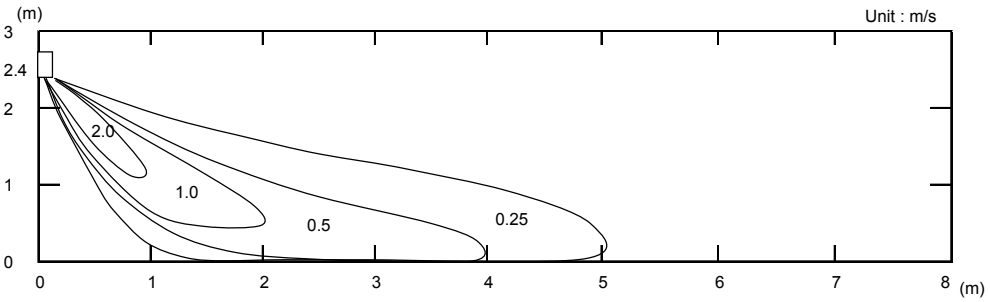

INDOOR UNITS

■ MODEL : AS∗A12GACH

Conditions
Fan speed : High
Operation mode : Fan
Voltage : 230V

Top view
Vertical flap : Up
Horizontal flap : Center

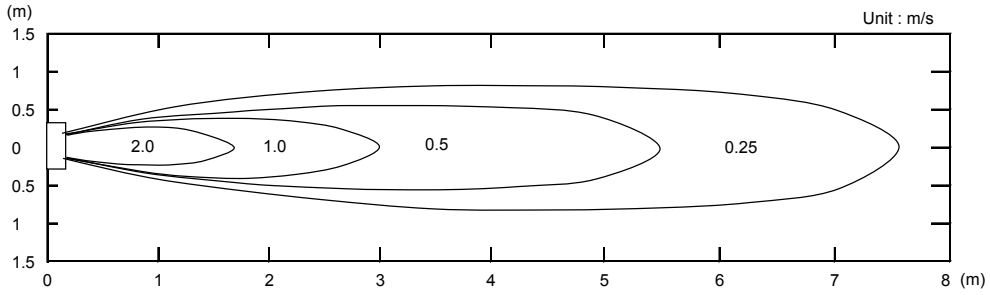

Top view
Vertical flap : Up
Horizontal flap : Right & Left

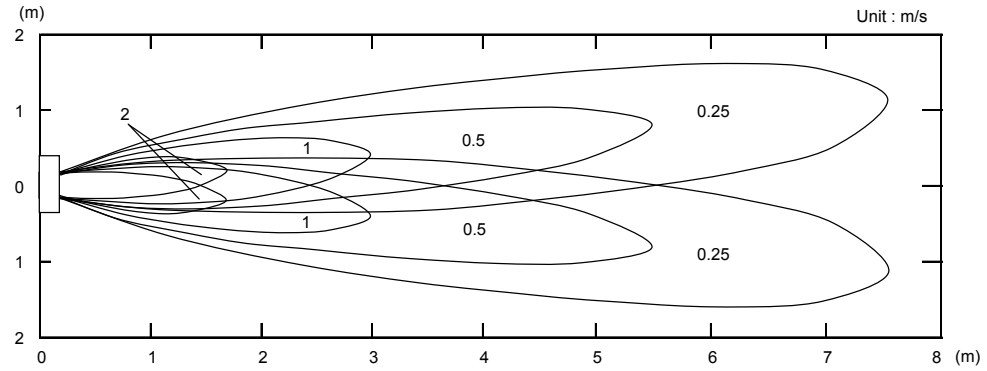

Side view
Vertical flap : Up
Horizontal flap : Center

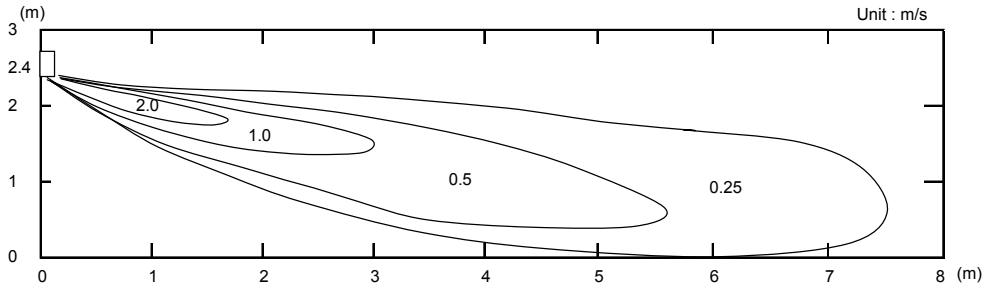

Side view
Vertical flap : Down
Horizontal flap : Center

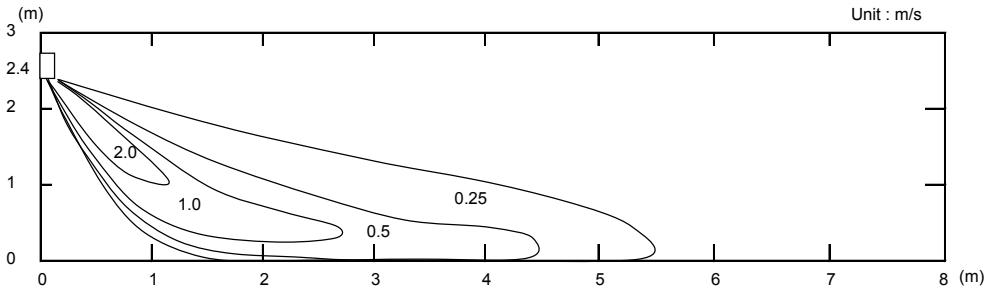

INDOOR UNITS

■ MODEL : AS∗A14GACH

Conditions
Fan speed : High
Operation mode : Fan
Voltage : 230V

Top view
Vertical flap : Up
Horizontal flap : Center

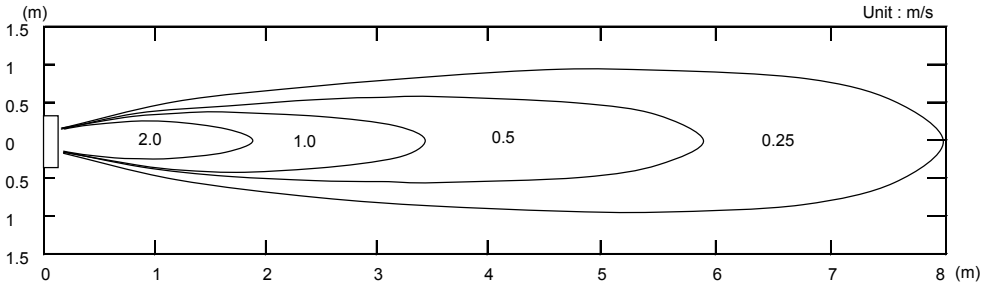

Top view
Vertical flap : Up
Horizontal flap : Right & Left

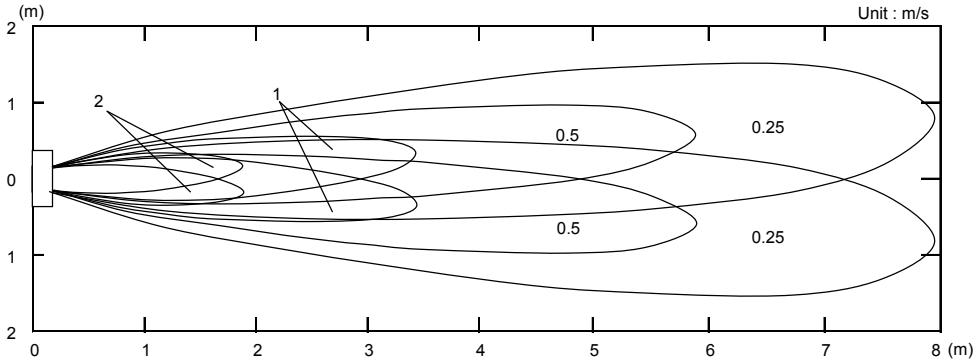

Side view
Vertical flap : Up
Horizontal flap : Center

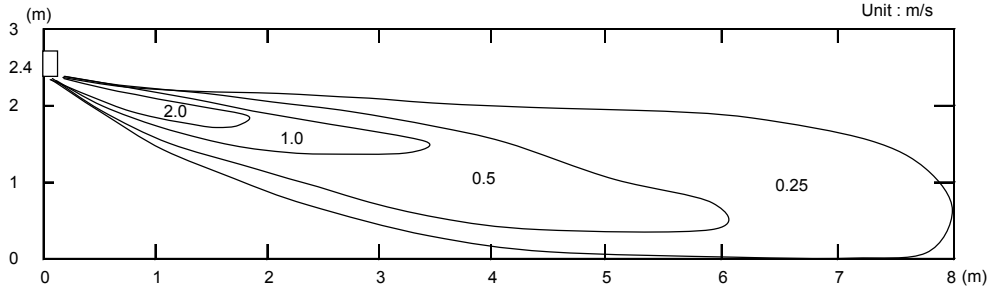

Side view
Vertical flap : Down
Horizontal flap : Center

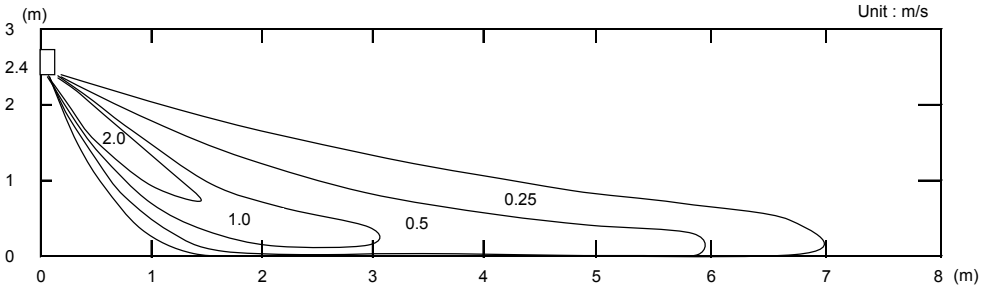

INDOOR UNITS

6-7. WALL MOUNTED TYPE (EEV external model)

■ MODEL : AS∗E04GACH

Conditions
Fan speed : High
Operation mode : Fan
Voltage : 230V

Top view
Vertical flap : Up
Horizontal flap : Center

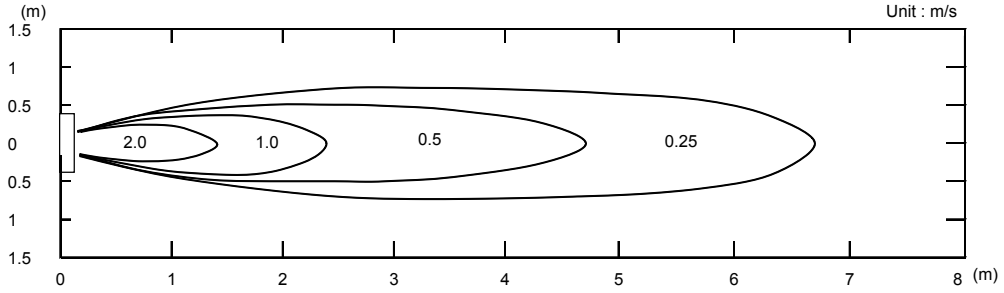

Top view
Vertical flap : Up
Horizontal flap : Right & Left

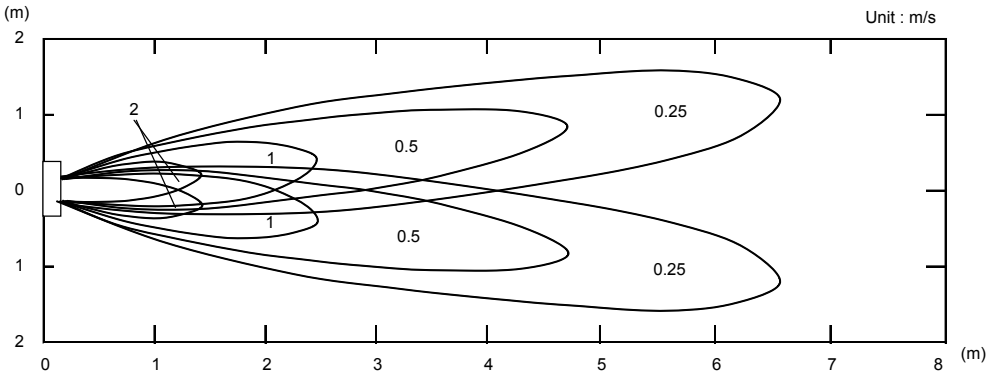

Side view
Vertical flap : Up
Horizontal flap : Center

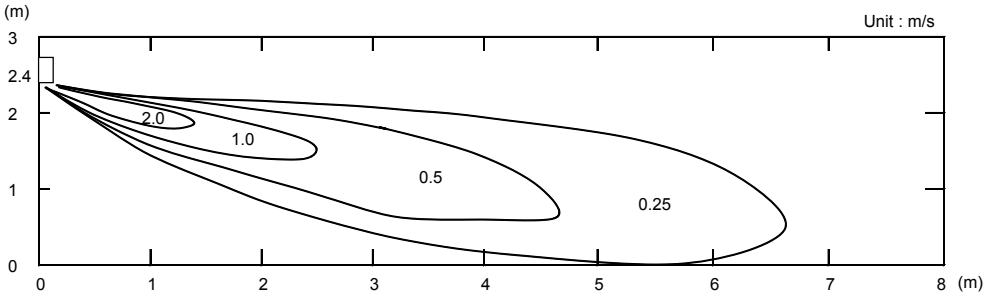

INDOOR UNITS

Conditions
Fan speed : High
Operation mode : Fan
Voltage : 230V

Side view
Vertical flap : Down
Horizontal flap : Center

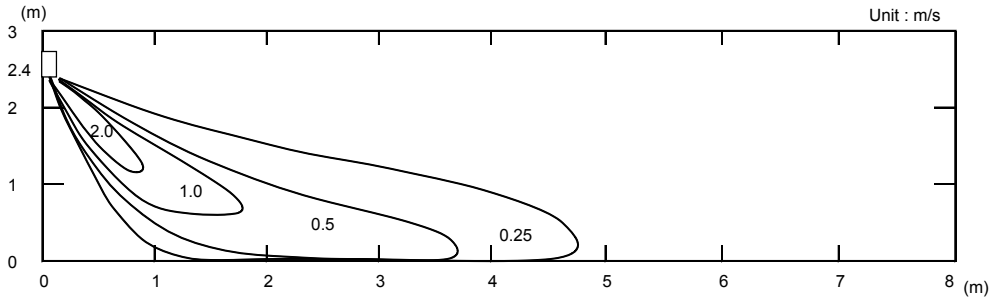

INDOOR UNITS

Conditions
Fan speed : High
Operation mode : Heat
Voltage : 230V
Reference Data

Side view
Vertical flap : Down
Horizontal flap : Center

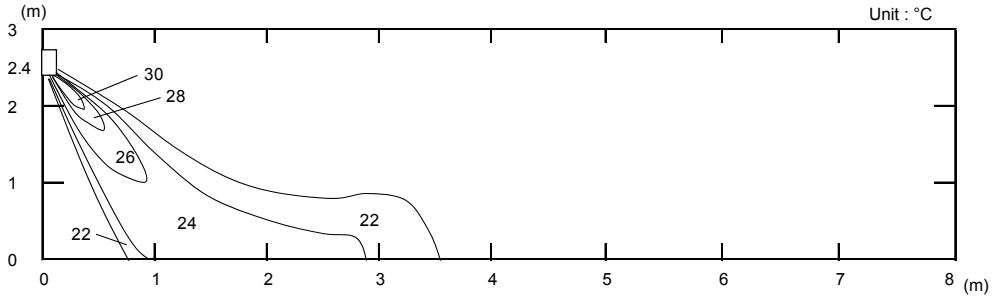

■ MODELS : AS∗E07GACH, AS∗E09GACH

Conditions
Fan speed : High
Operation mode : Fan
Voltage : 230V

Top view
Vertical flap : Up
Horizontal flap : Center

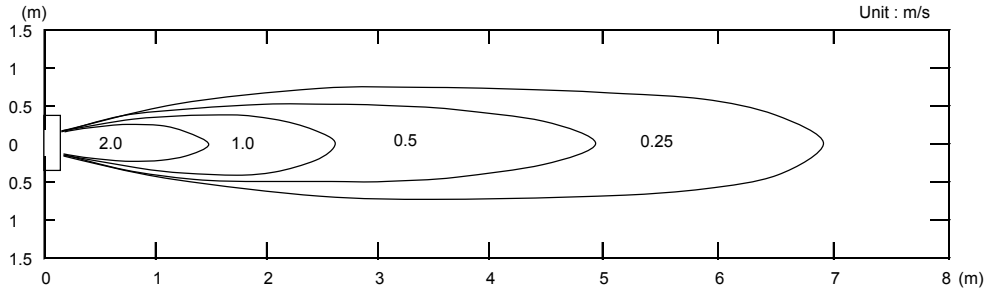

Top view
Vertical flap : Up
Horizontal flap : Right & Left

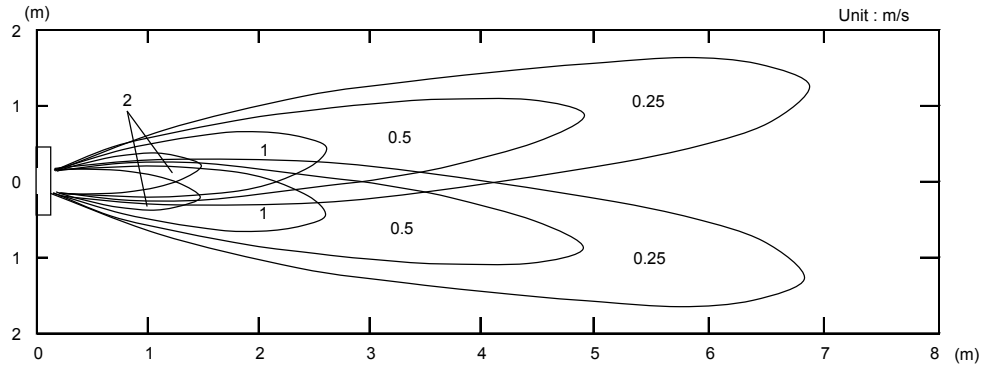

Side view
Vertical flap : Up
Horizontal flap : Center

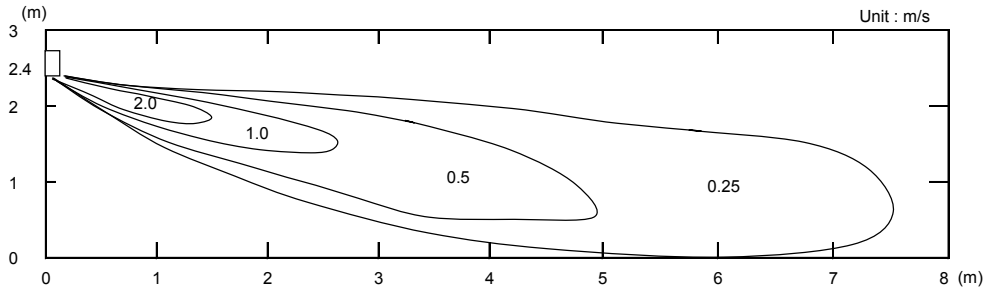

Side view
Vertical flap : Down
Horizontal flap : Center

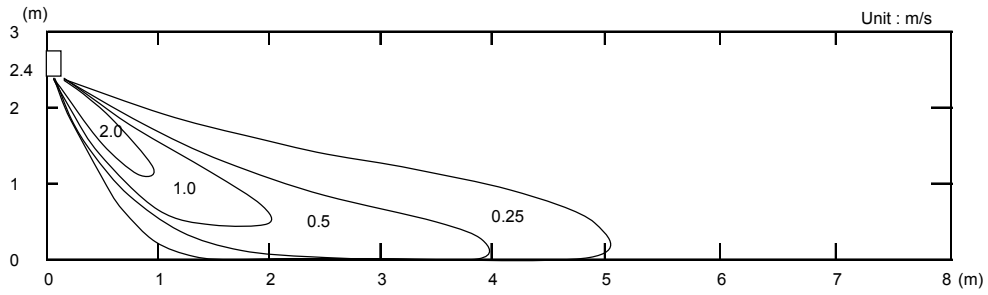

INDOOR UNITS

■ MODEL : AS∗E12GACH

Conditions
Fan speed : High
Operation mode : Fan
Voltage : 230V

Top view
Vertical flap : Up
Horizontal flap : Center

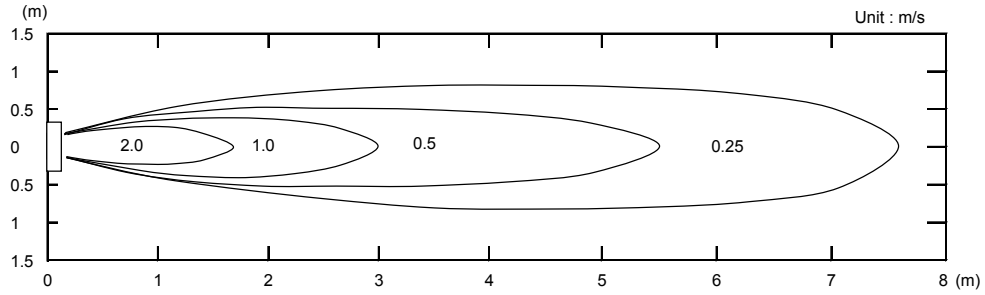

Top view
Vertical flap : Up
Horizontal flap : Right & Left

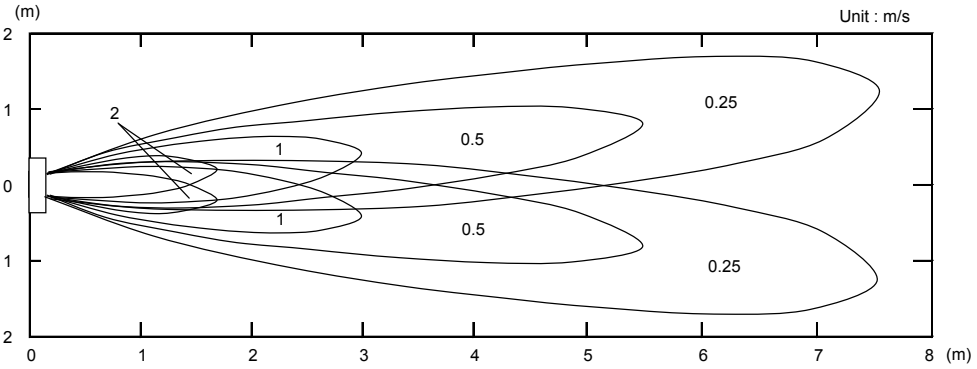

Side view
Vertical flap : Up
Horizontal flap : Center

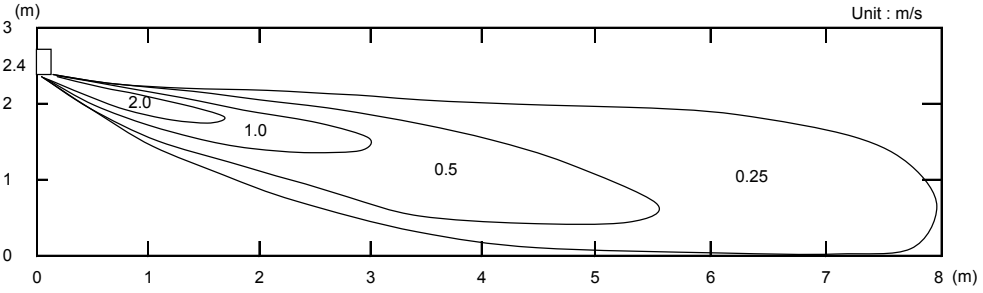

Side view
Vertical flap : Down
Horizontal flap : Center

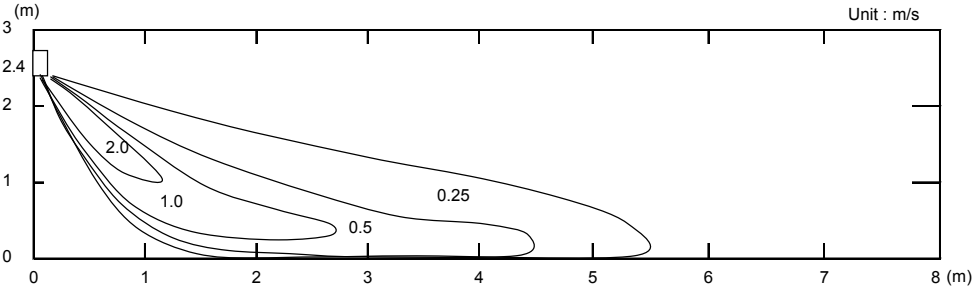

INDOOR UNITS

■ MODEL : AS∗E14GACH

Conditions
Fan speed : High
Operation mode : Fan
Voltage : 230V

Top view
Vertical flap : Up
Horizontal flap : Center

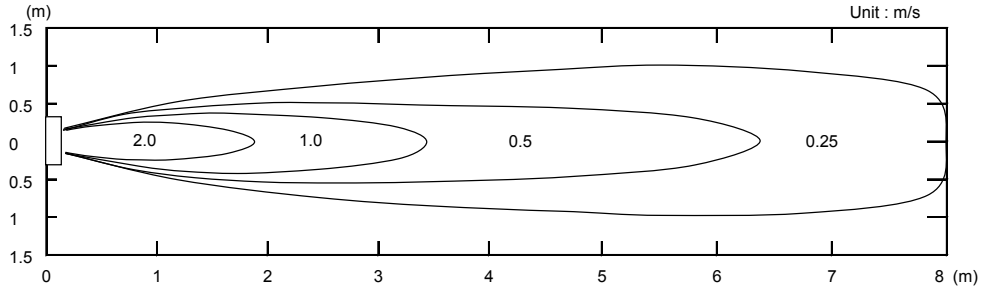

Top view
Vertical flap : Up
Horizontal flap : Right & Left

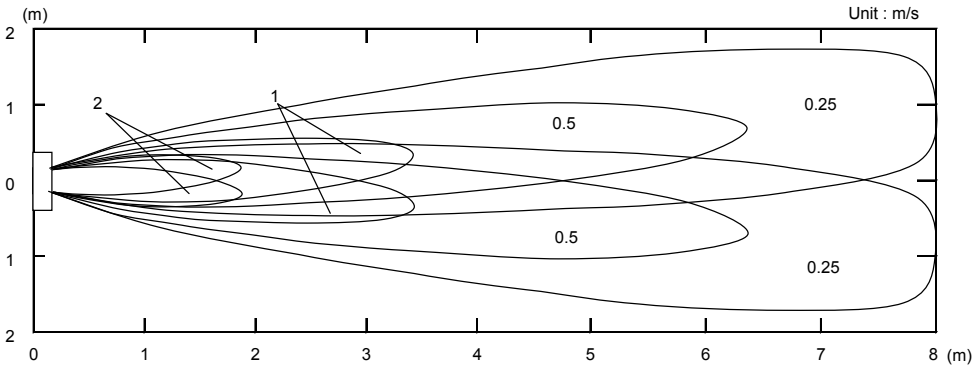

Side view
Vertical flap : Up
Horizontal flap : Center

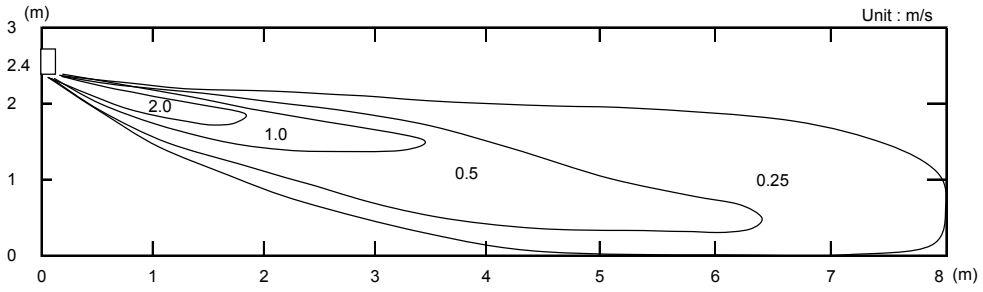

Side view
Vertical flap : Down
Horizontal flap : Center

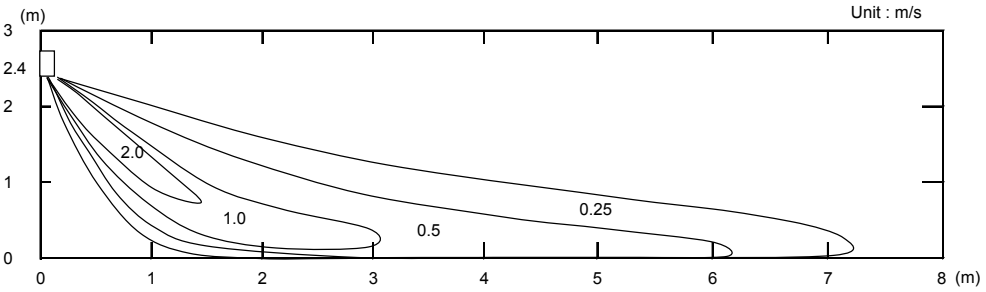

INDOOR UNITS

6-8. WALL MOUNTED TYPE

■ MODEL : AS∗A18GACH

Conditions
Fan speed : High
Operation mode : Fan
Voltage : 230V

Top view
Vertical flap : Up
Horizontal flap : Center

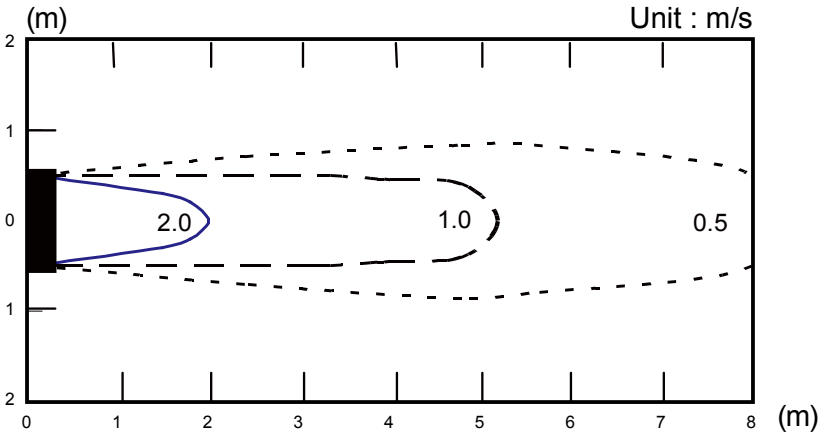

Top view
Vertical flap : Up
Horizontal flap : Right & Left

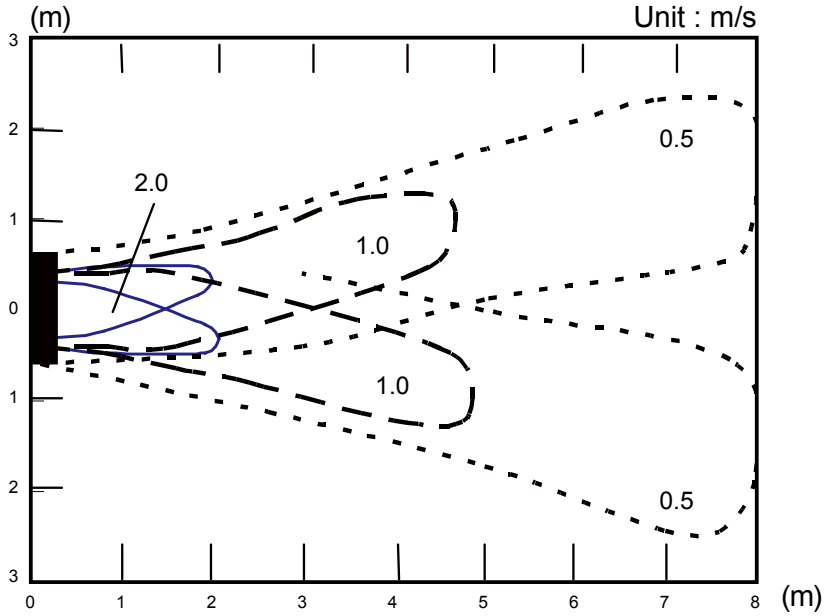

Side view
Vertical flap : Up
Horizontal flap : Center

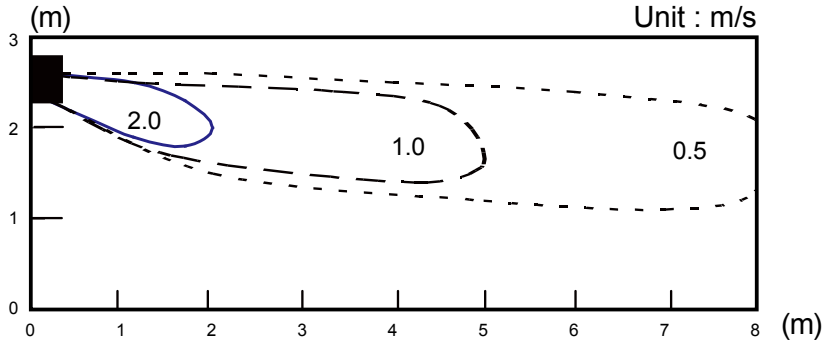

Side view
Vertical flap : Down
Horizontal flap : Center

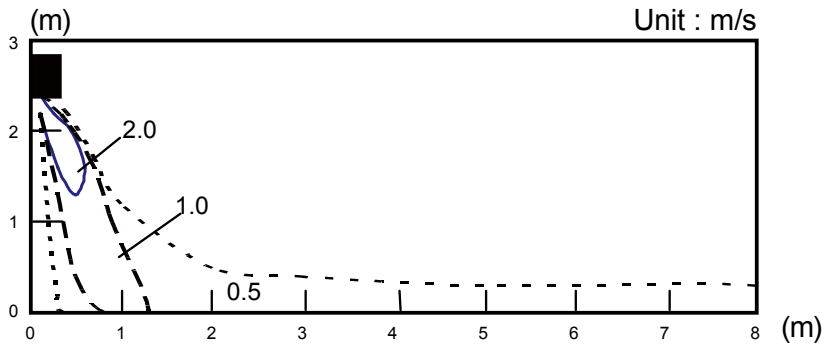

■ MODEL : AS∗A24GACH

Conditions
Fan speed : High
Operation mode : Fan
Voltage : 230V

Top view
Vertical flap : Up
Horizontal flap : Center

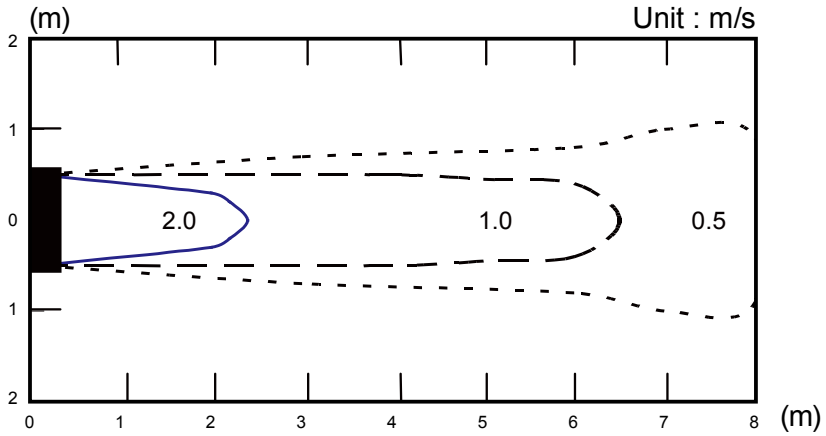

Top view
Vertical flap : Up
Horizontal flap : Right & Left

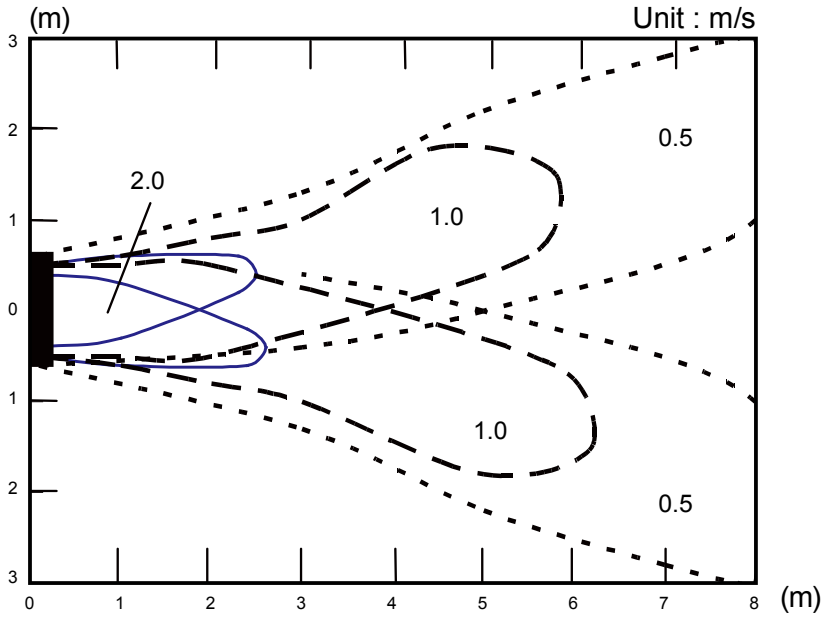

Side view
Vertical flap : Up
Horizontal flap : Center

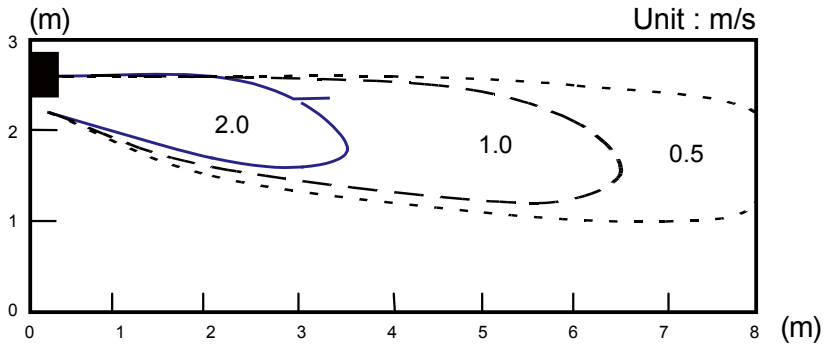

Side view
Vertical flap : Down
Horizontal flap : Center

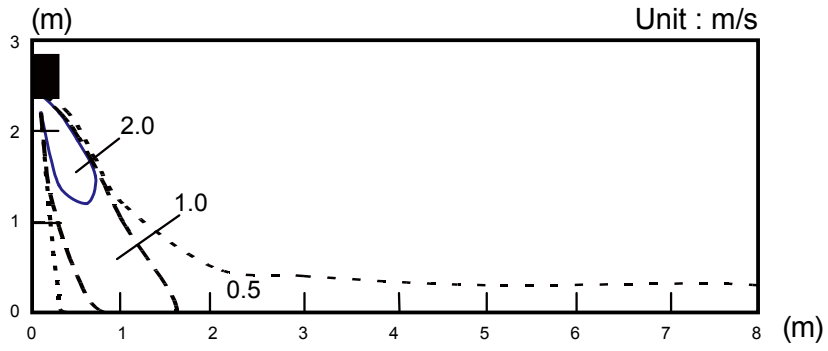

INDOOR UNITS

■ MODEL : AS∗A30GACH

Conditions
Fan speed : High
Operation mode : Fan
Voltage : 230V

Top view
Vertical flap : Up
Horizontal flap : Center

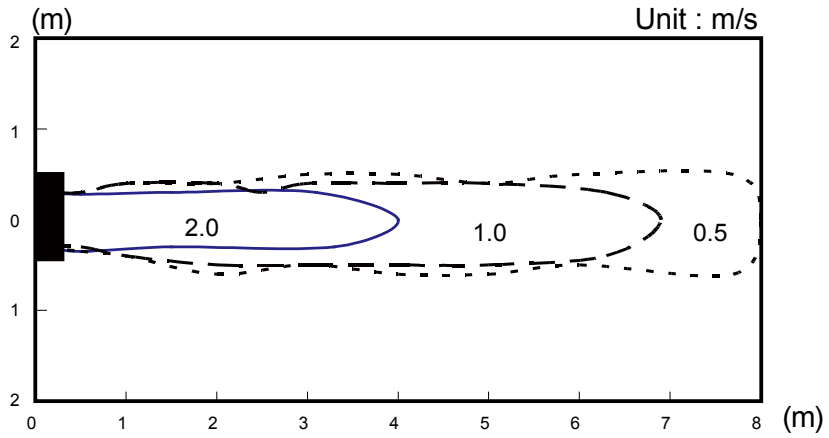

Top view
Vertical flap : Up
Horizontal flap : Right & Left

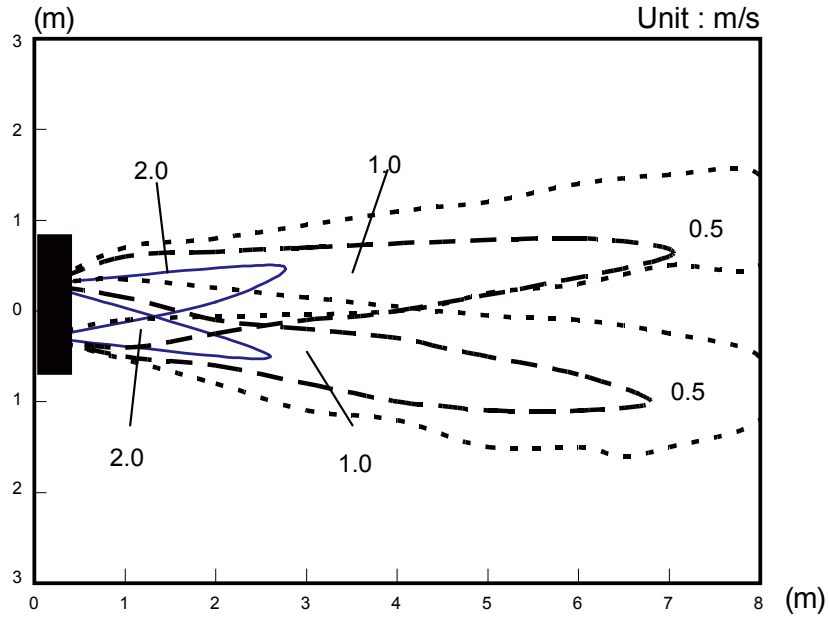

Side view
Vertical flap : Up
Horizontal flap : Center

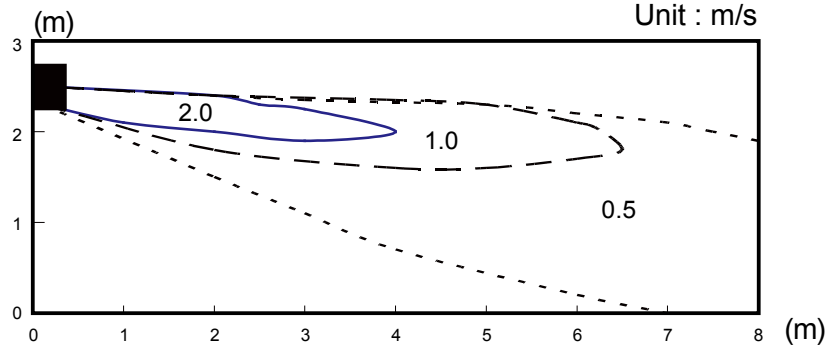

Side view
Vertical flap : Down
Horizontal flap : Center

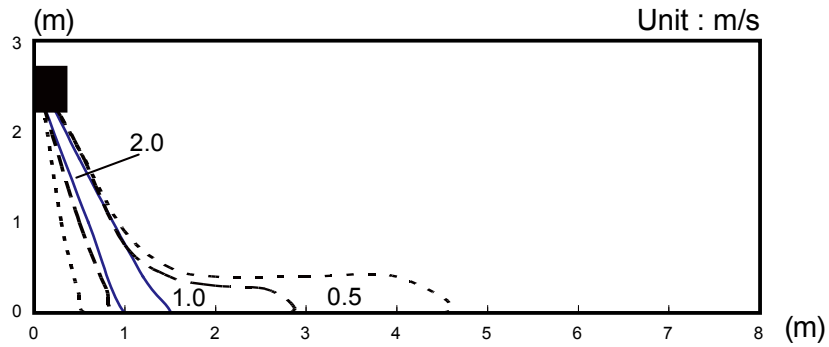

7. FAN PERFORMANCE CURVE

7-1. LOW STATIC PRESSURE DUCT / CONCEALED FLOOR TYPE

■ MODEL : ARXB07GALH

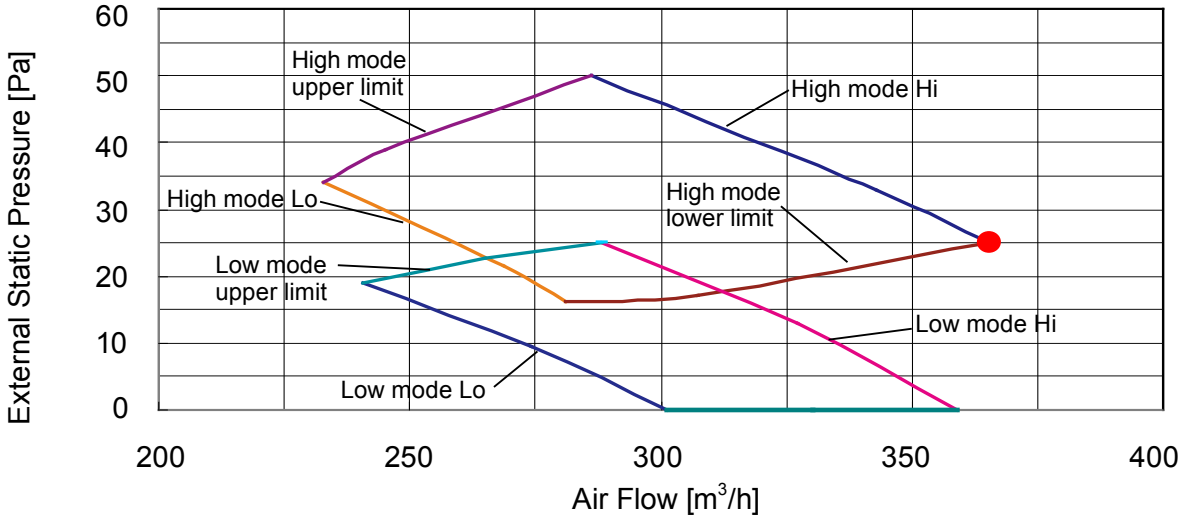

Cooling

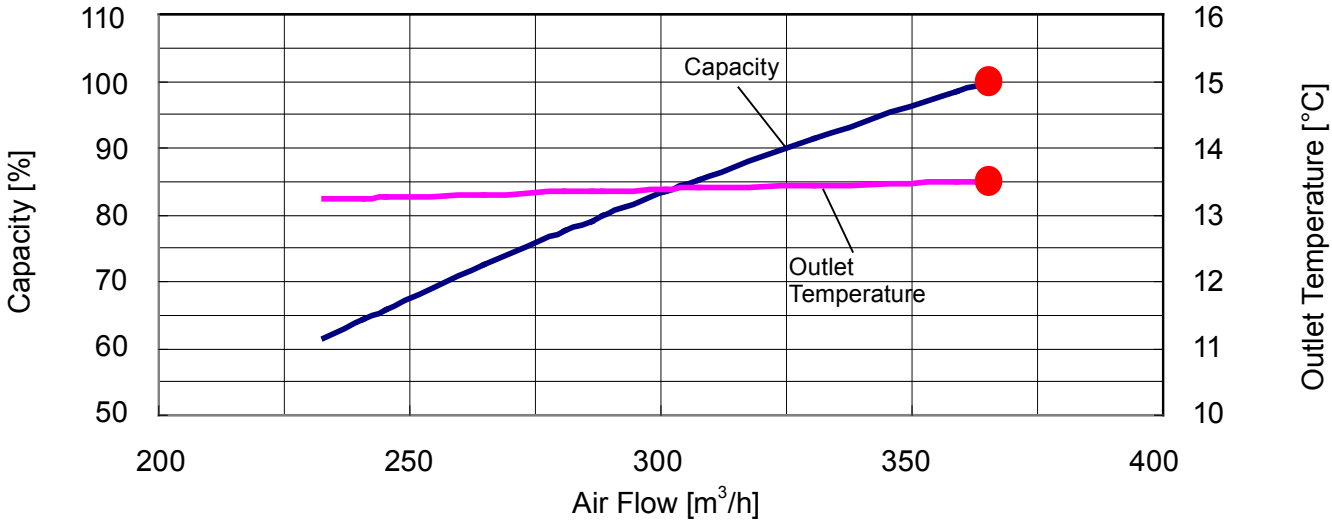

Heating

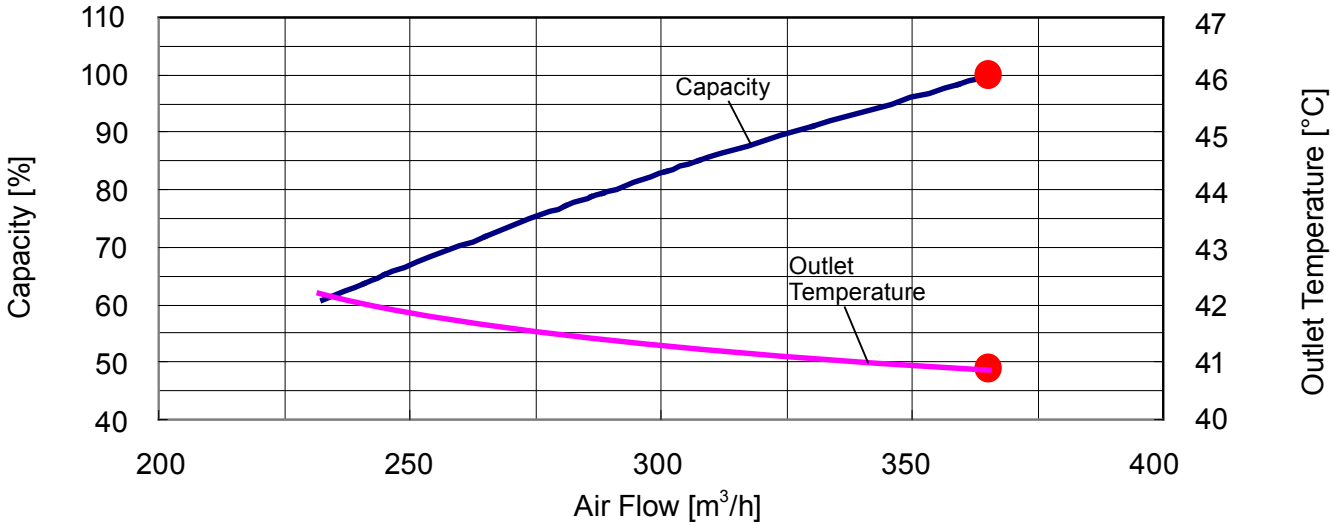

■ MODEL : ARXB09GALH

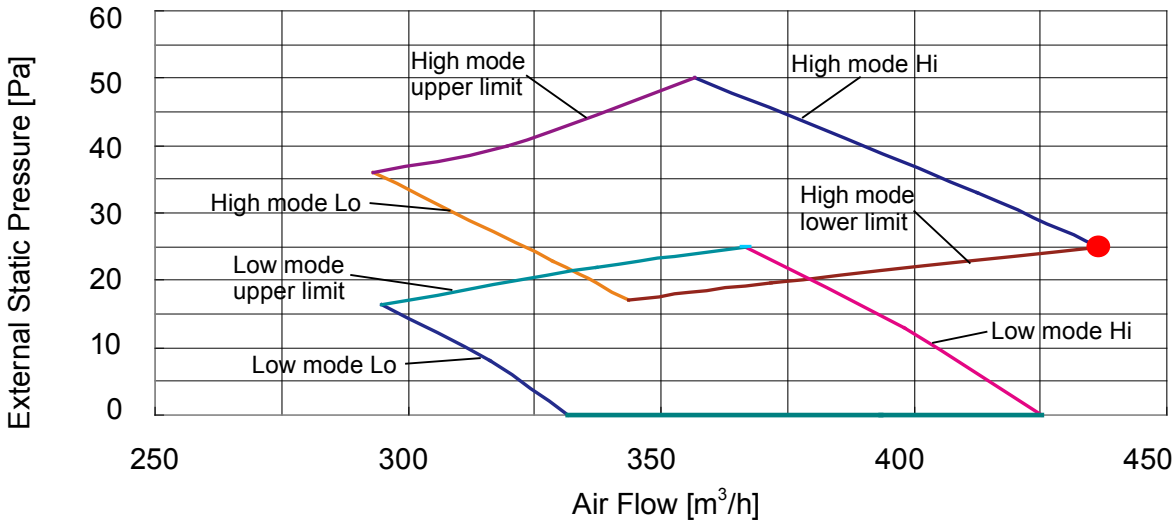

Cooling

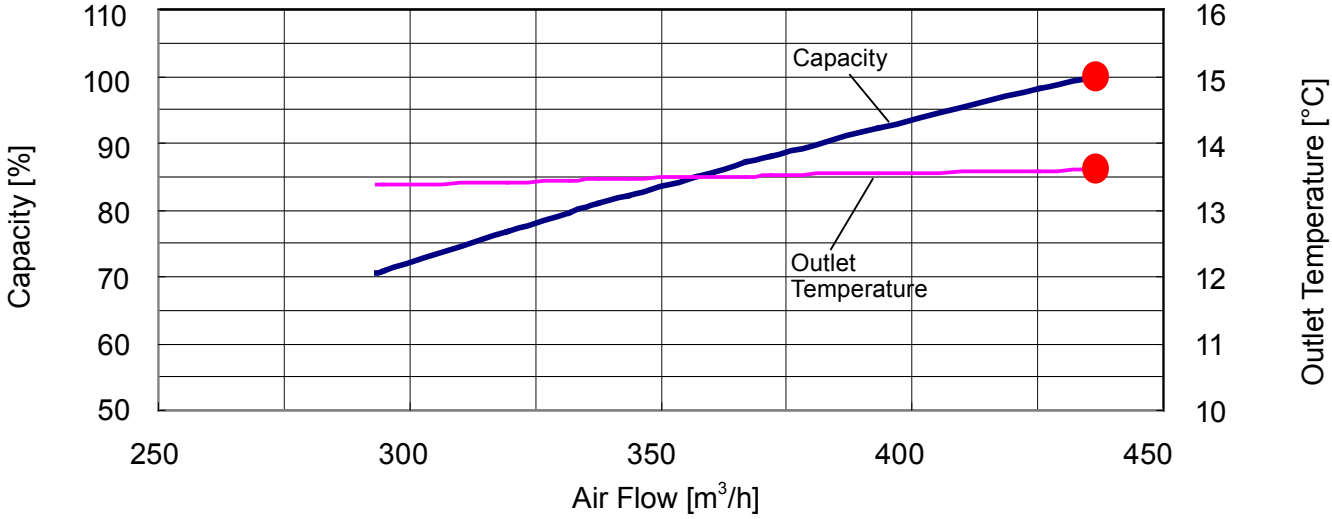

Heating

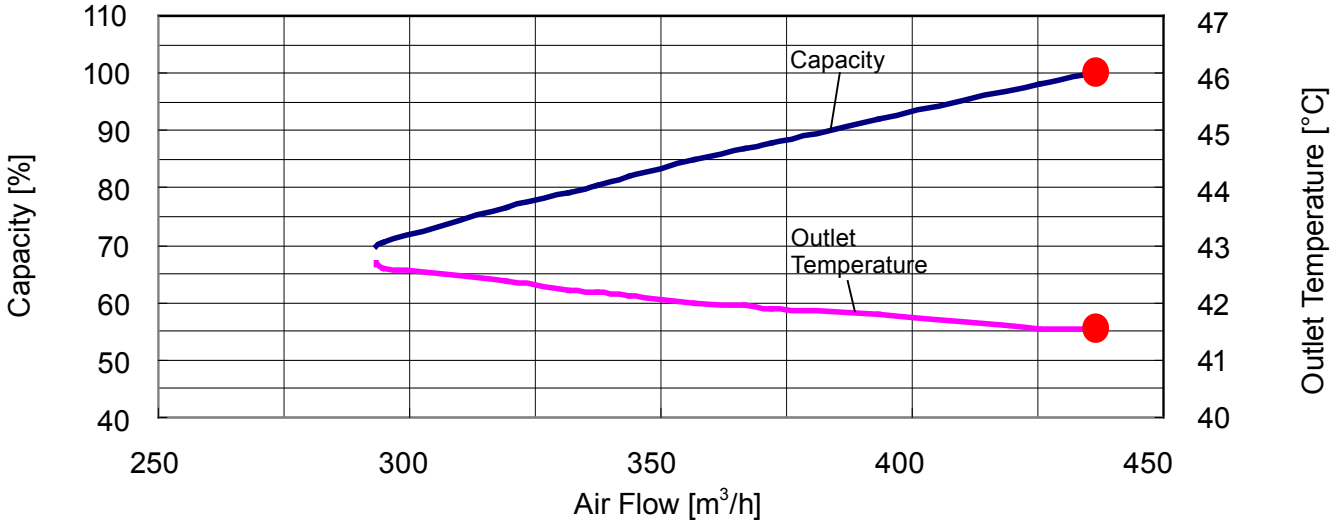

■ MODEL : ARXB12GALH

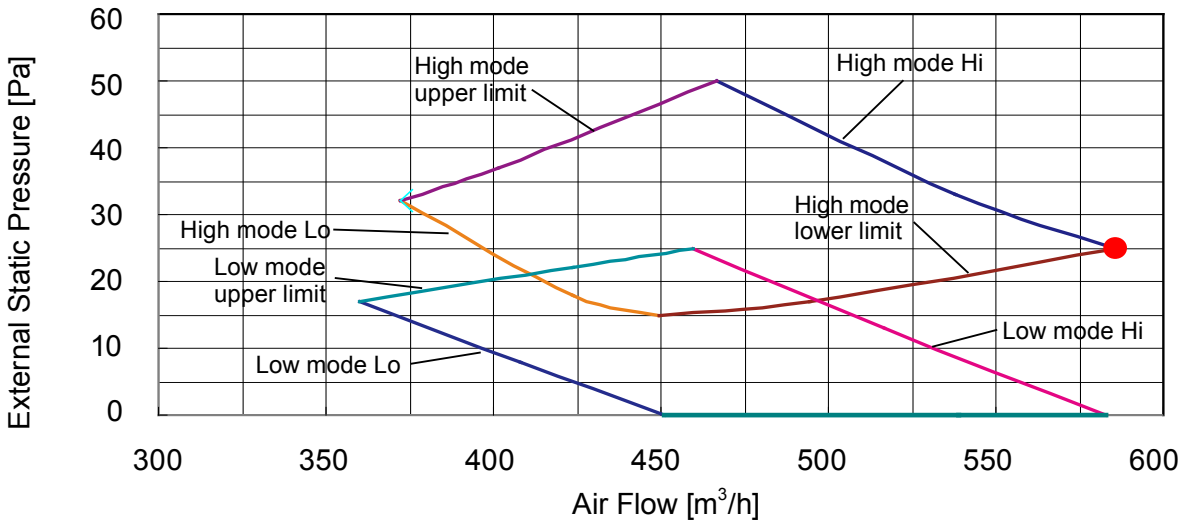

Cooling

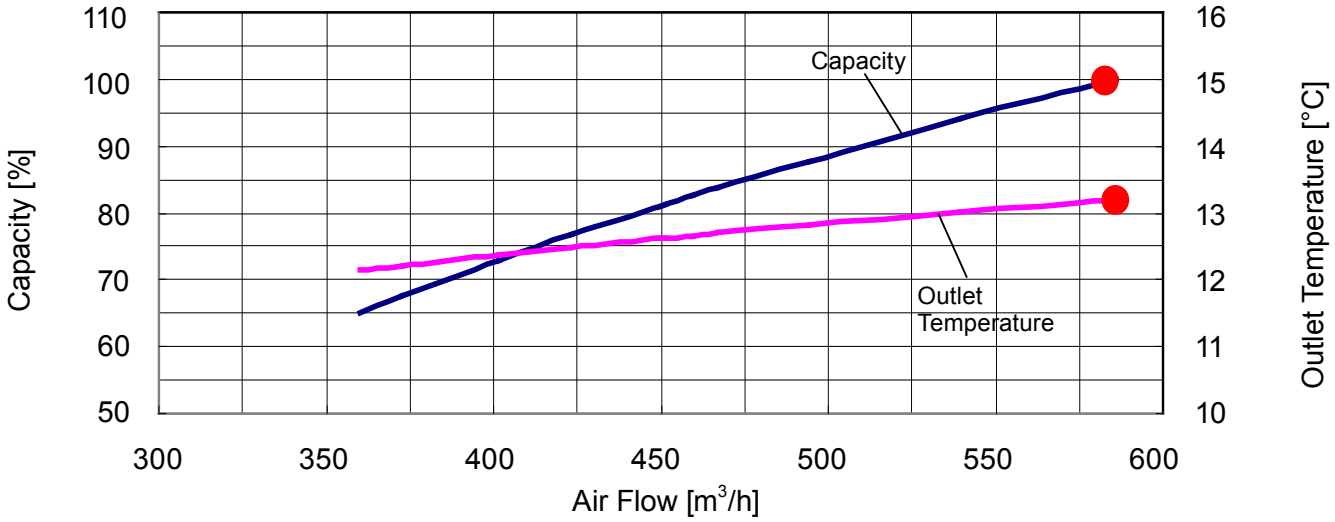

Heating

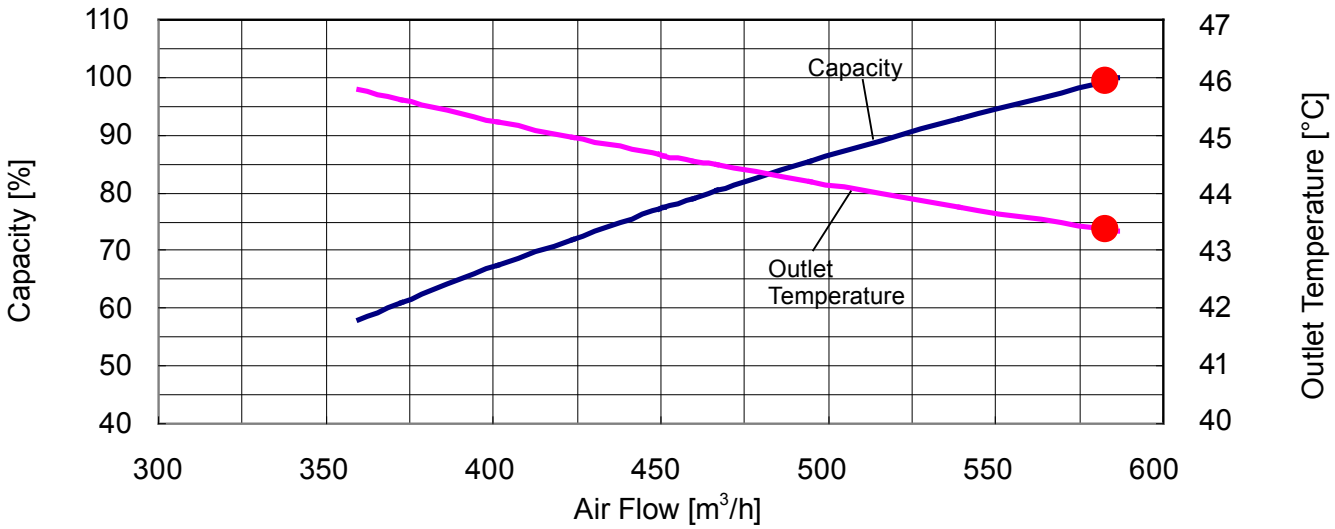

■ MODEL : ARXB14GALH

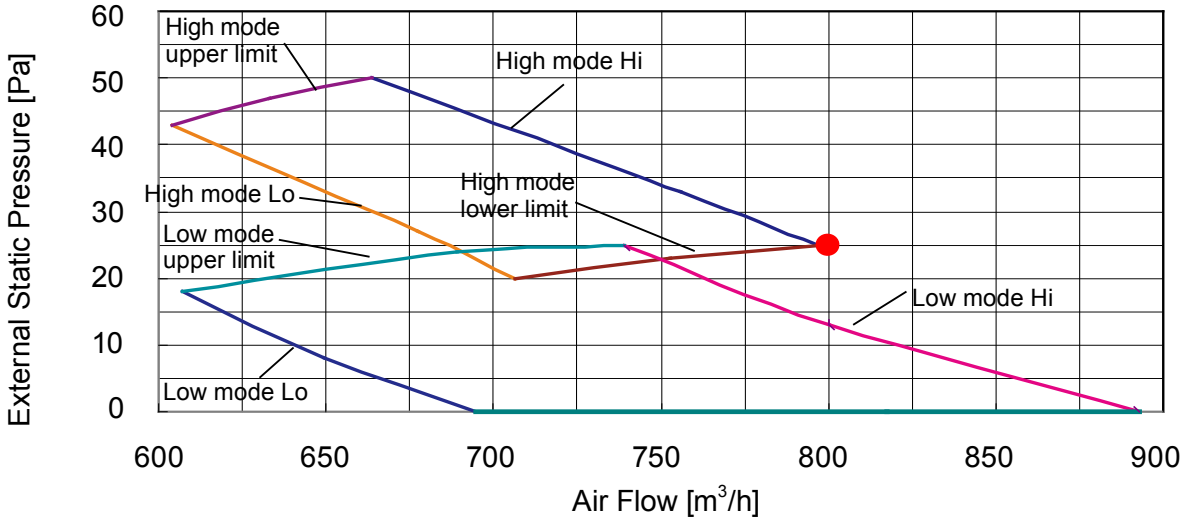

Cooling

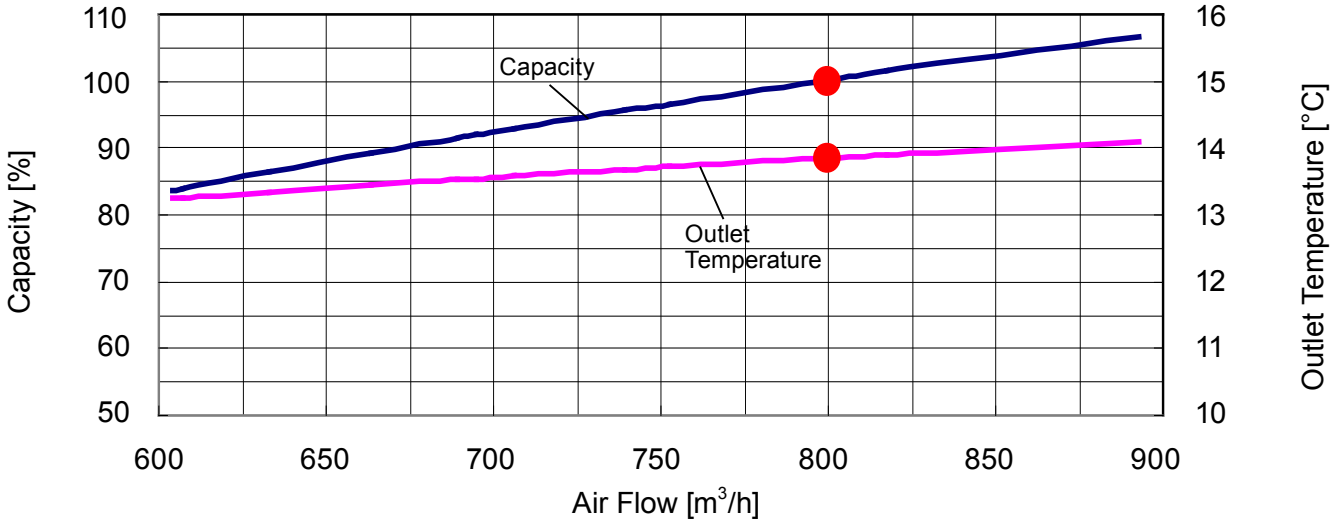

Heating

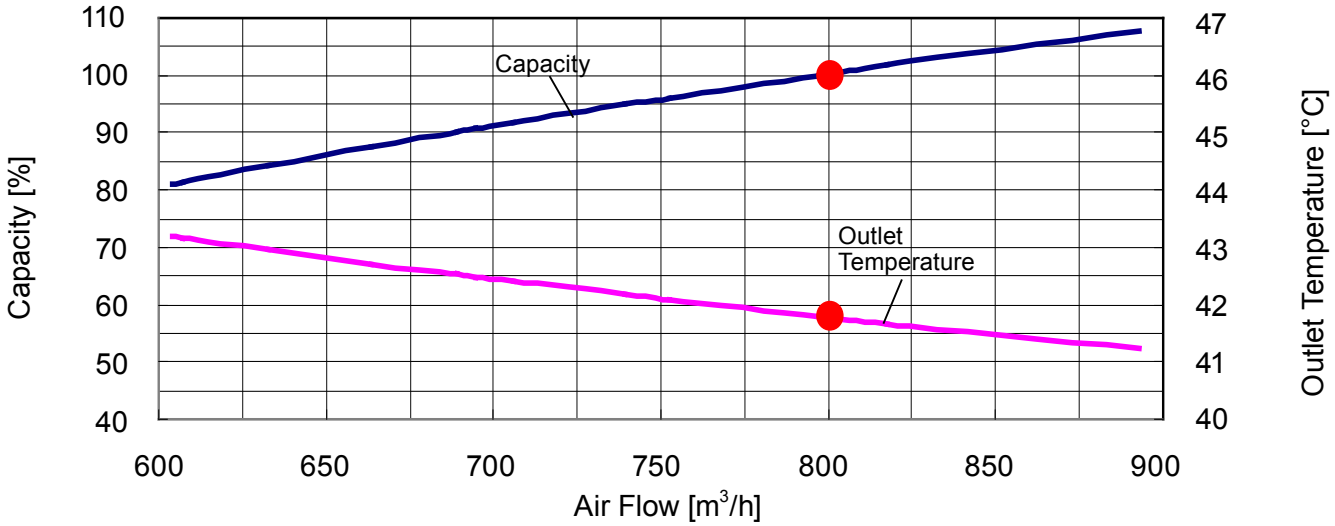

■ MODEL : ARXB18GALH

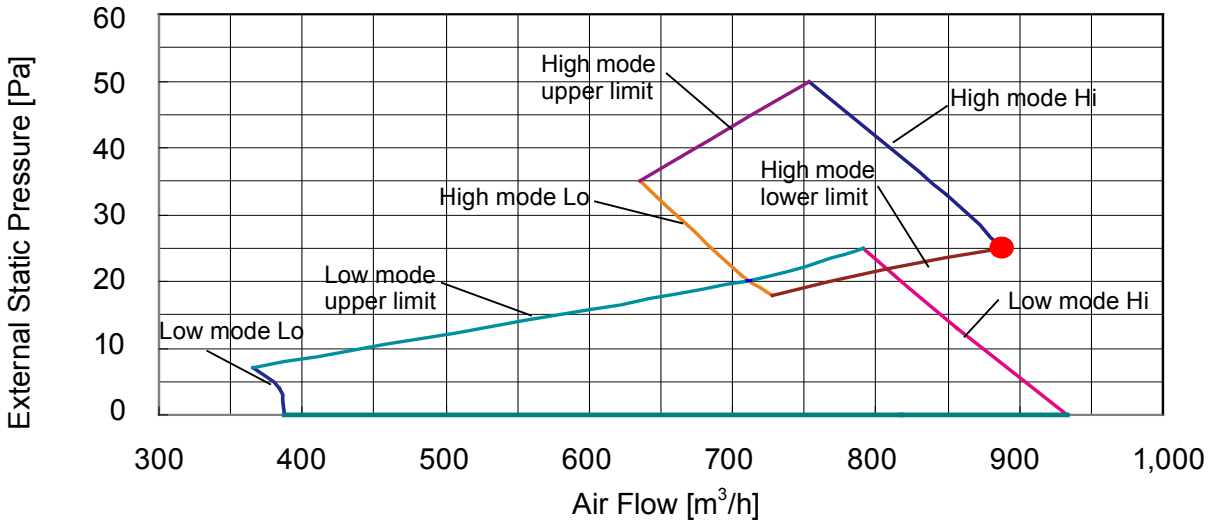

Cooling

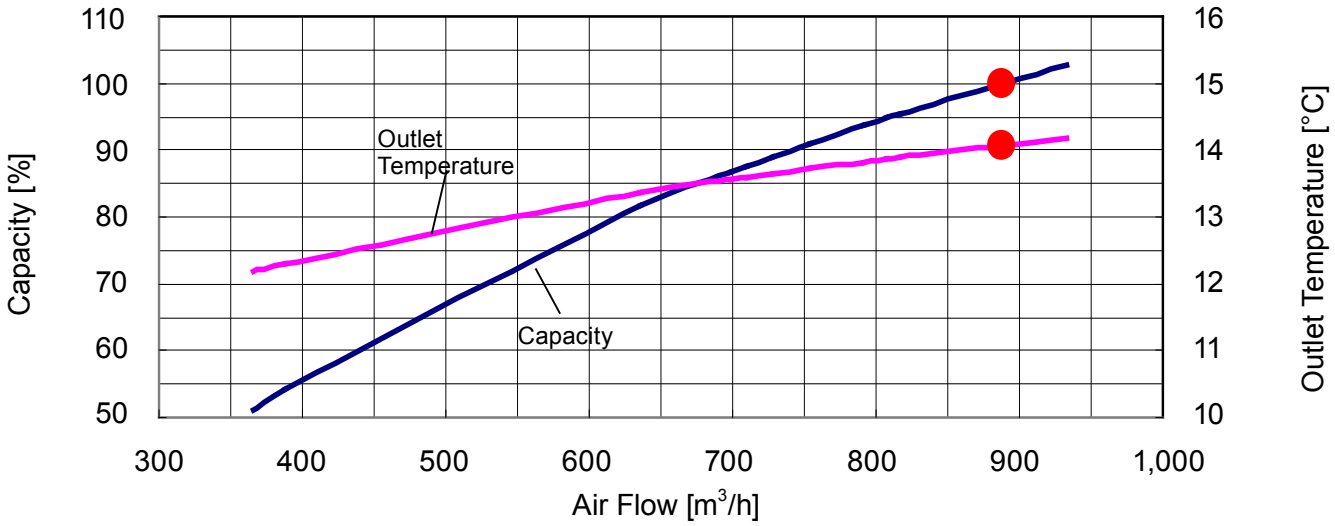

Heating

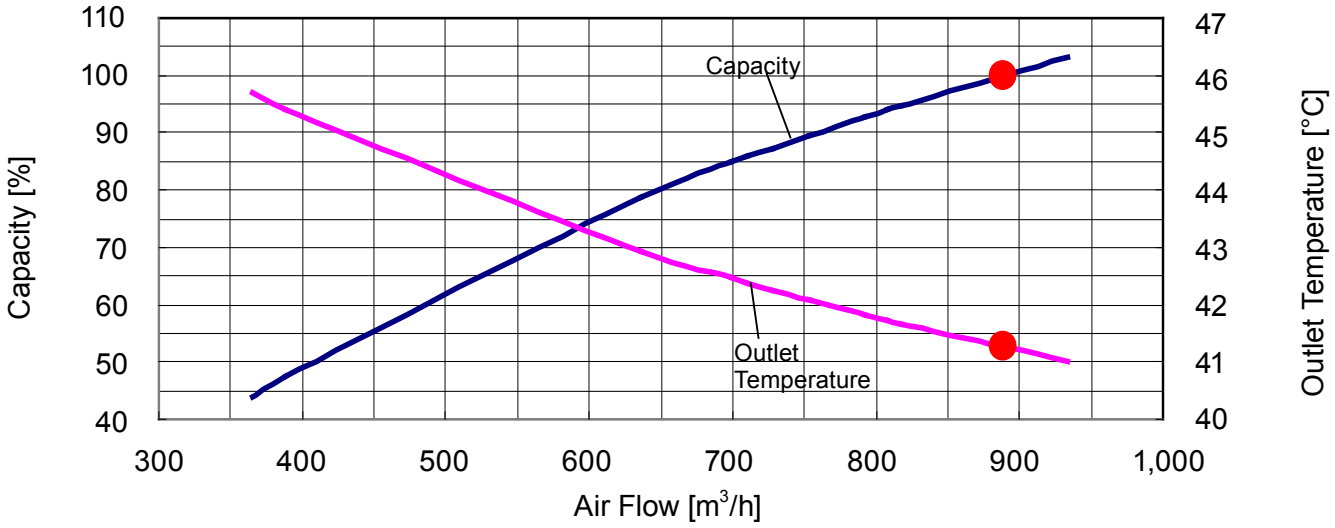

7-2. SLIM DUCT / SLIM CONCEALED FLOOR TYPE

■ MODEL : ARXD04GALH

● Cooling

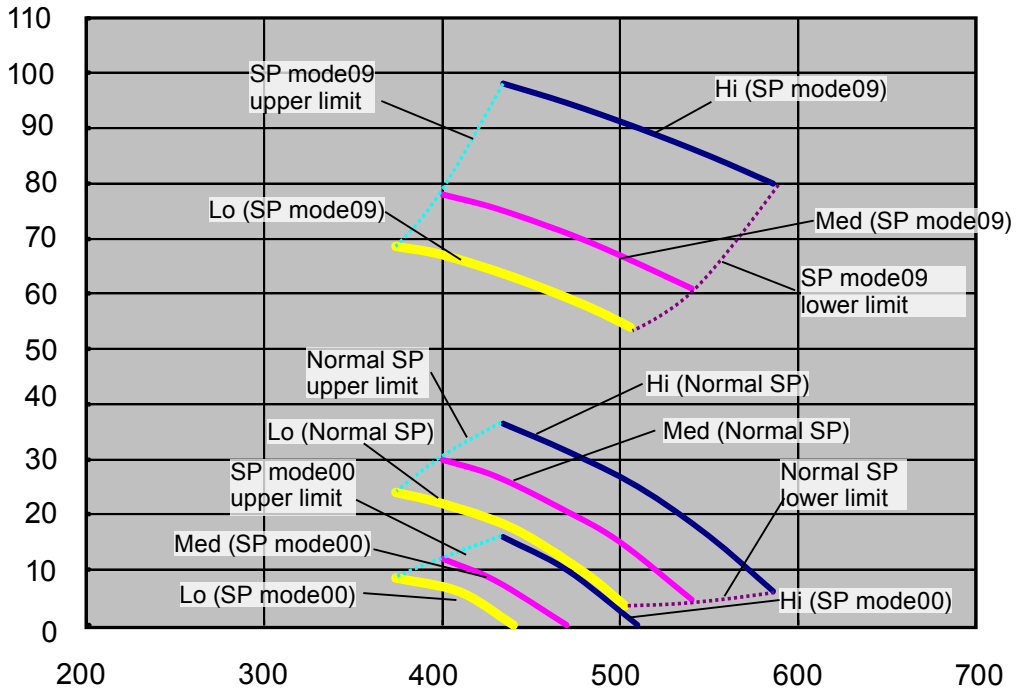

● Heating

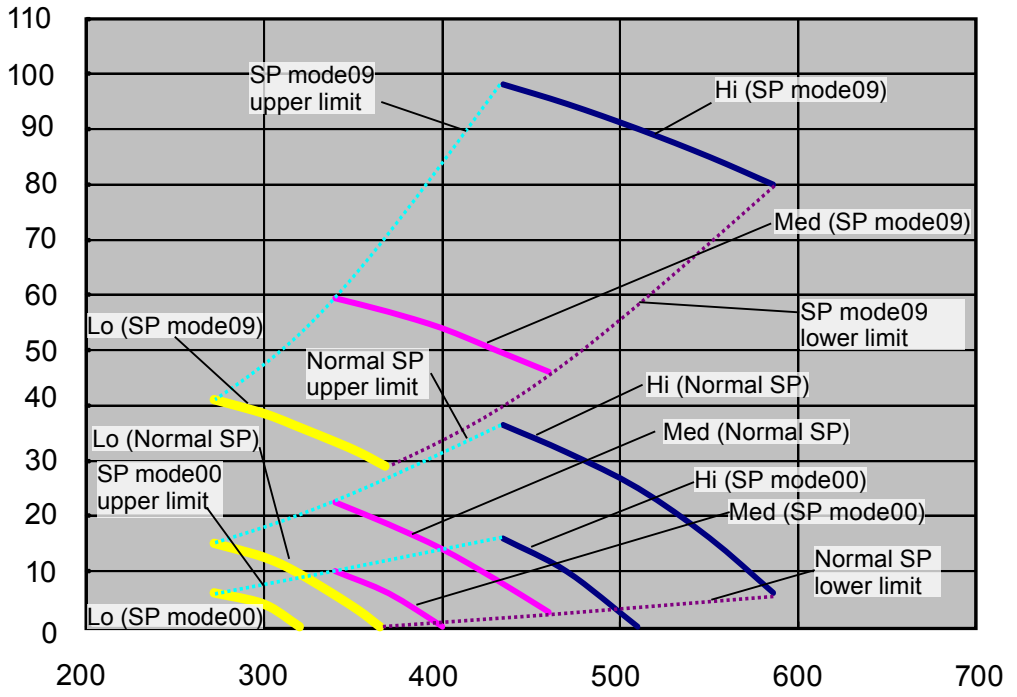

INDOOR UNITS

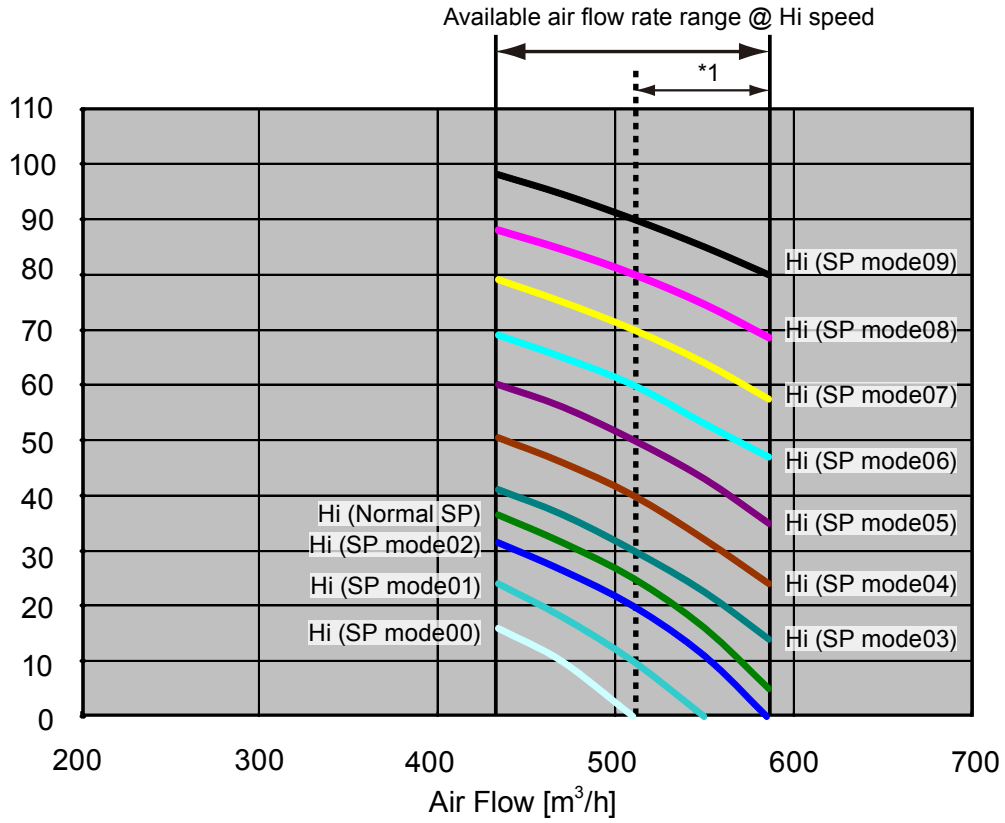

*1: Available air flow rate range when Auto louver grille (option) is installed.
Fan speed : High
Vertical flap : Up

Cooling

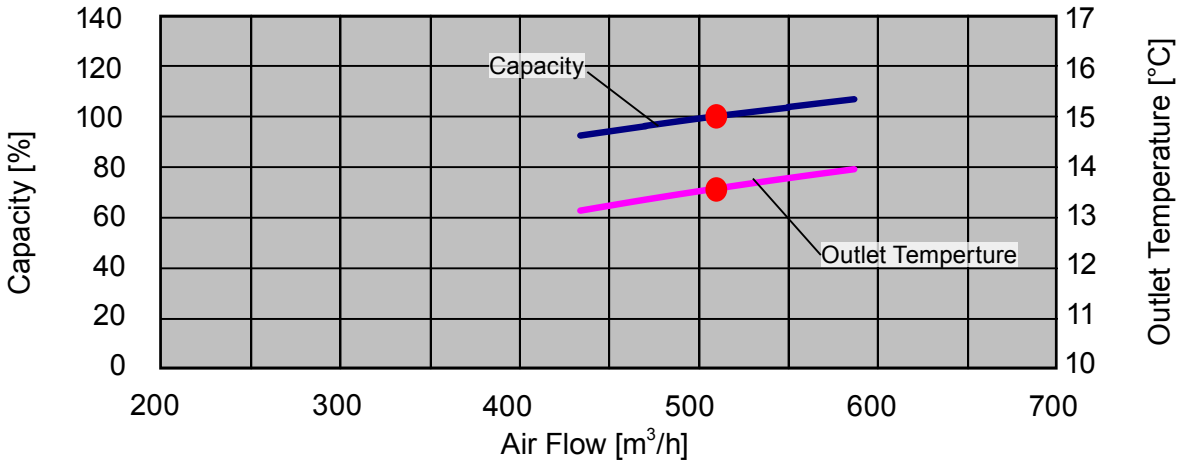

Heating

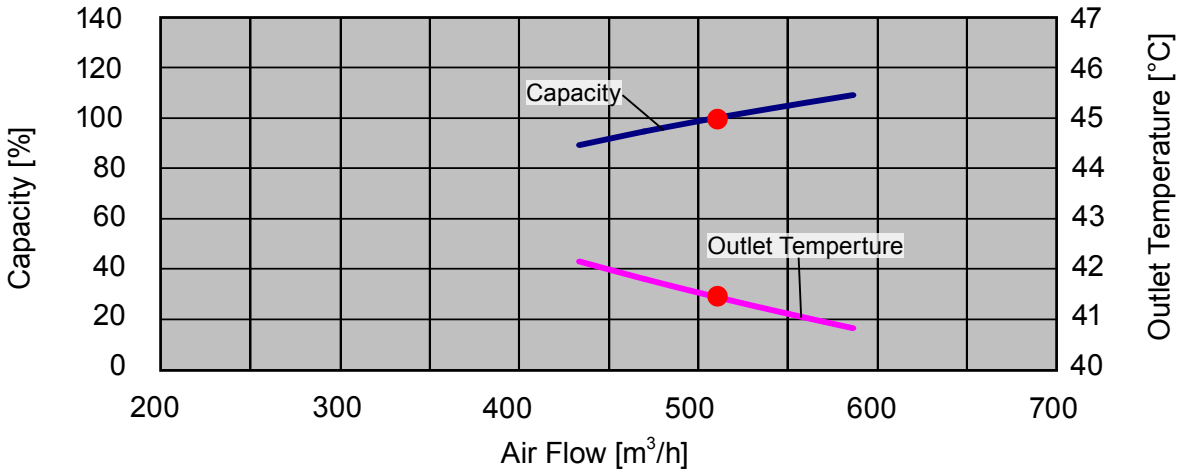

INDOOR UNITS

■ MODEL : ARXD07GALH

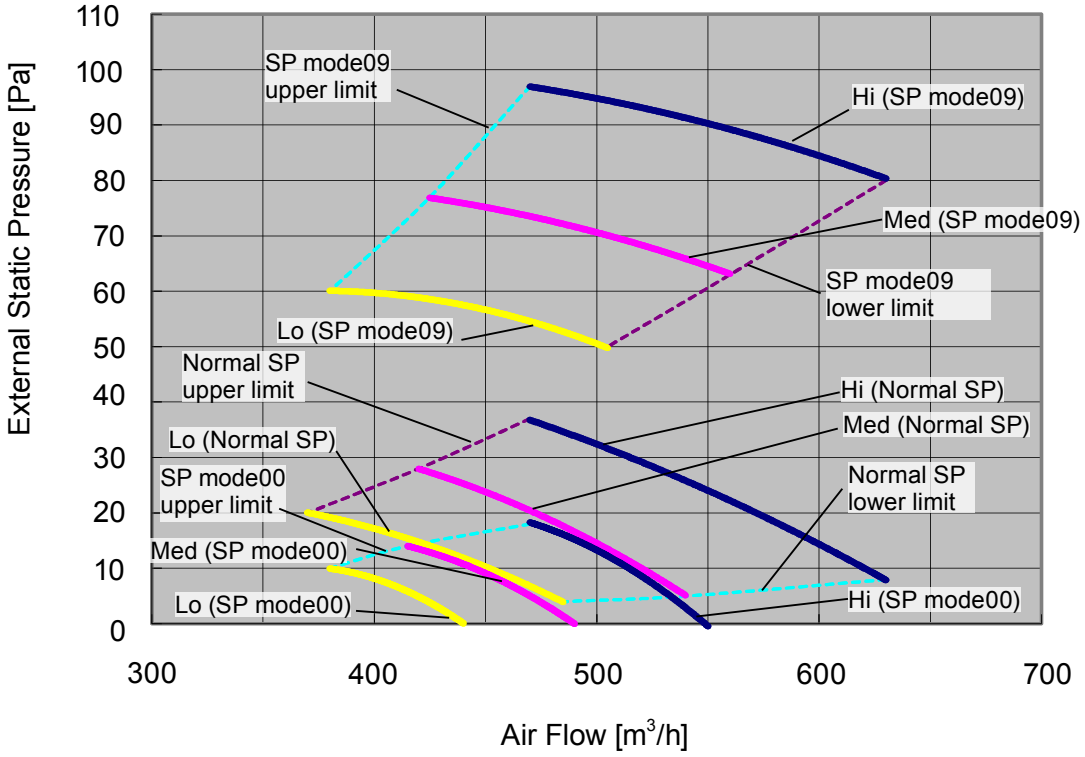

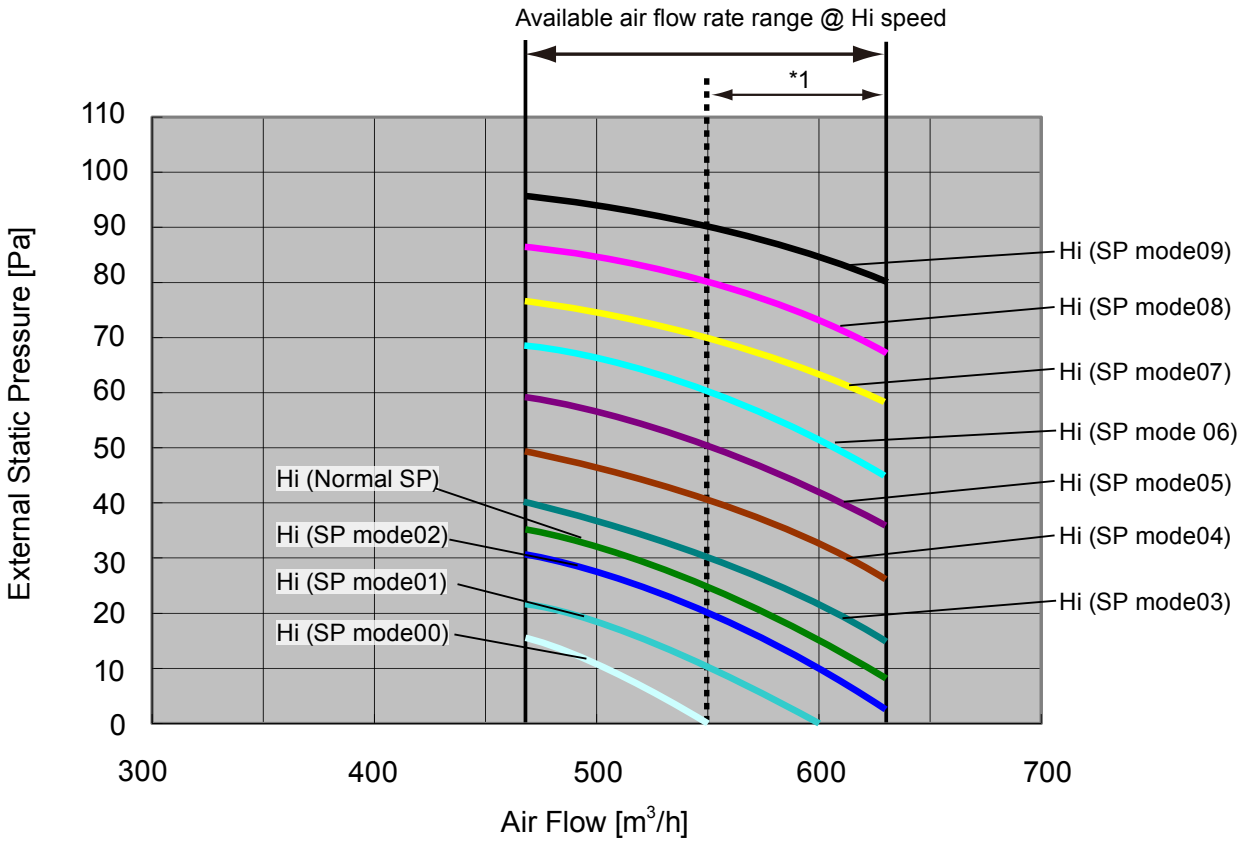

*1: Available air flow rate range when Auto louver grille (option) is installed.
Fan speed : High
Vertical flap : Up

Cooling

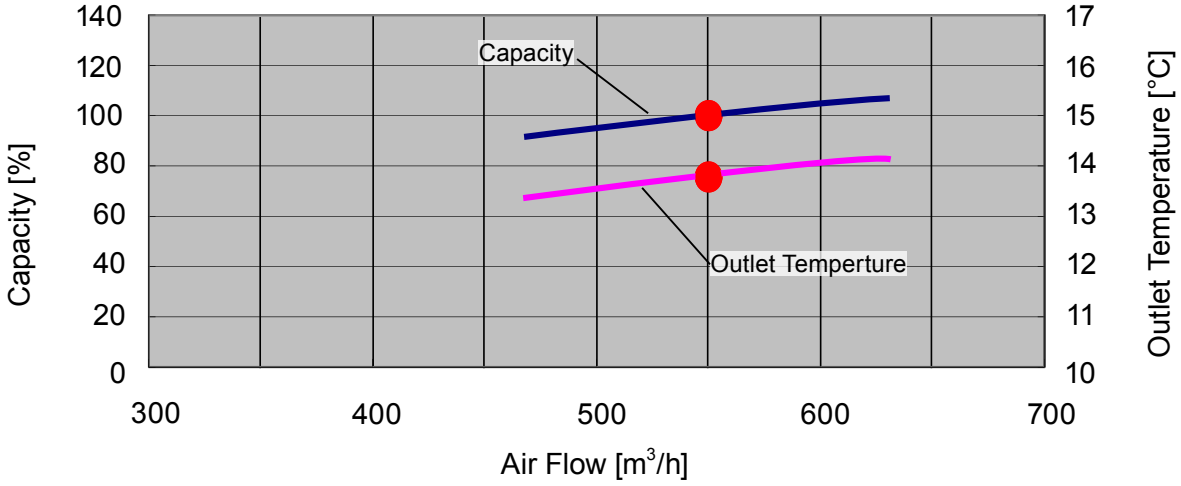

Heating

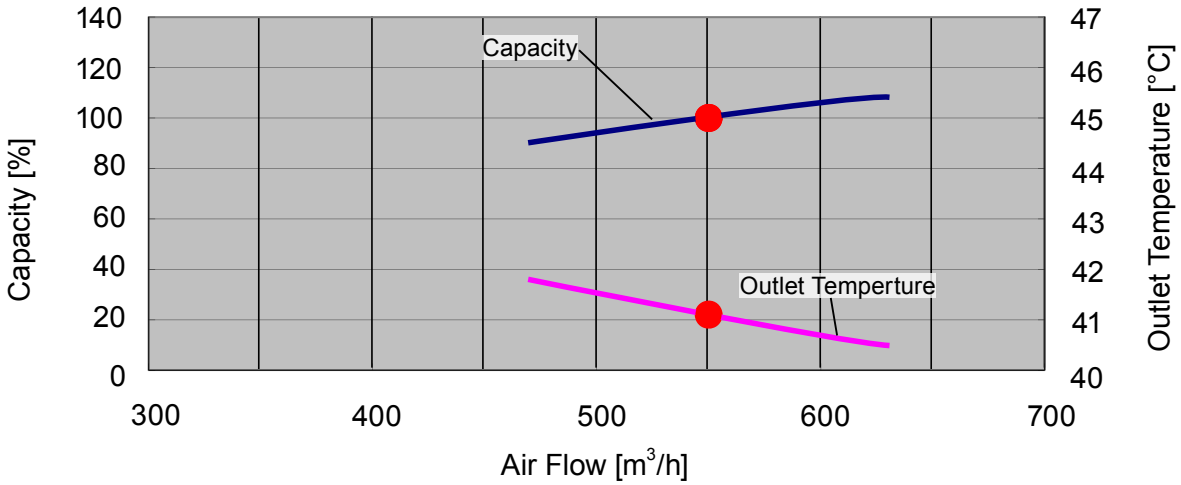

INDOOR UNITS

■ MODEL : ARXD09GALH

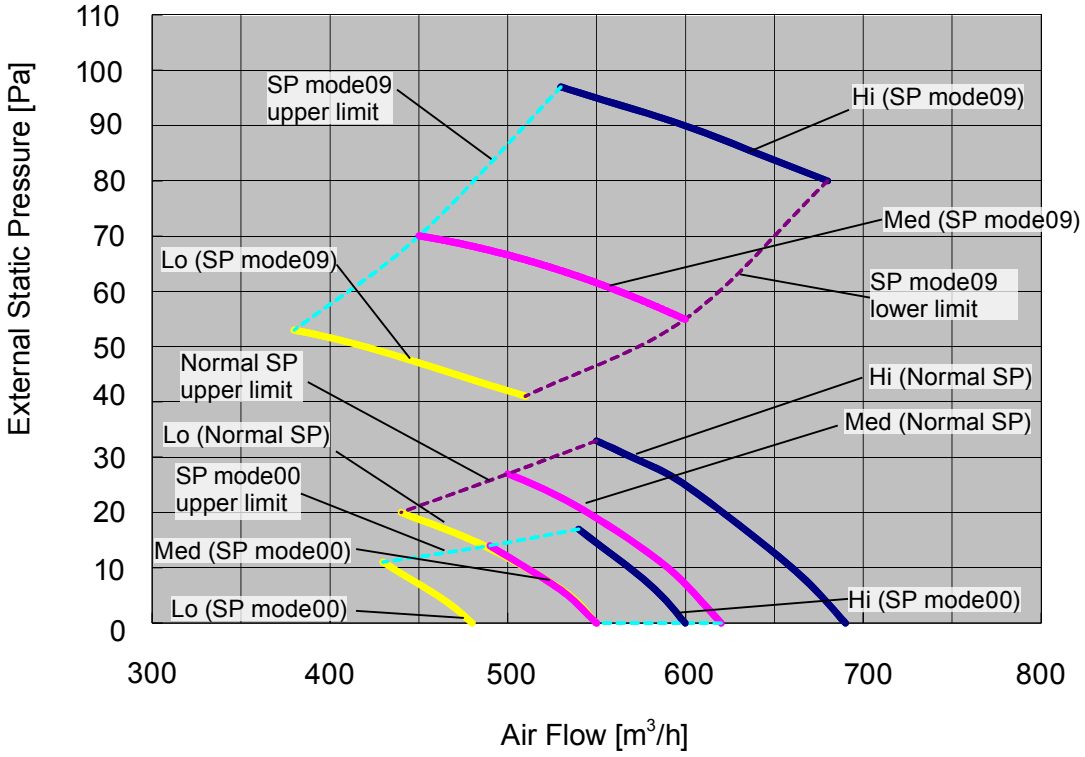

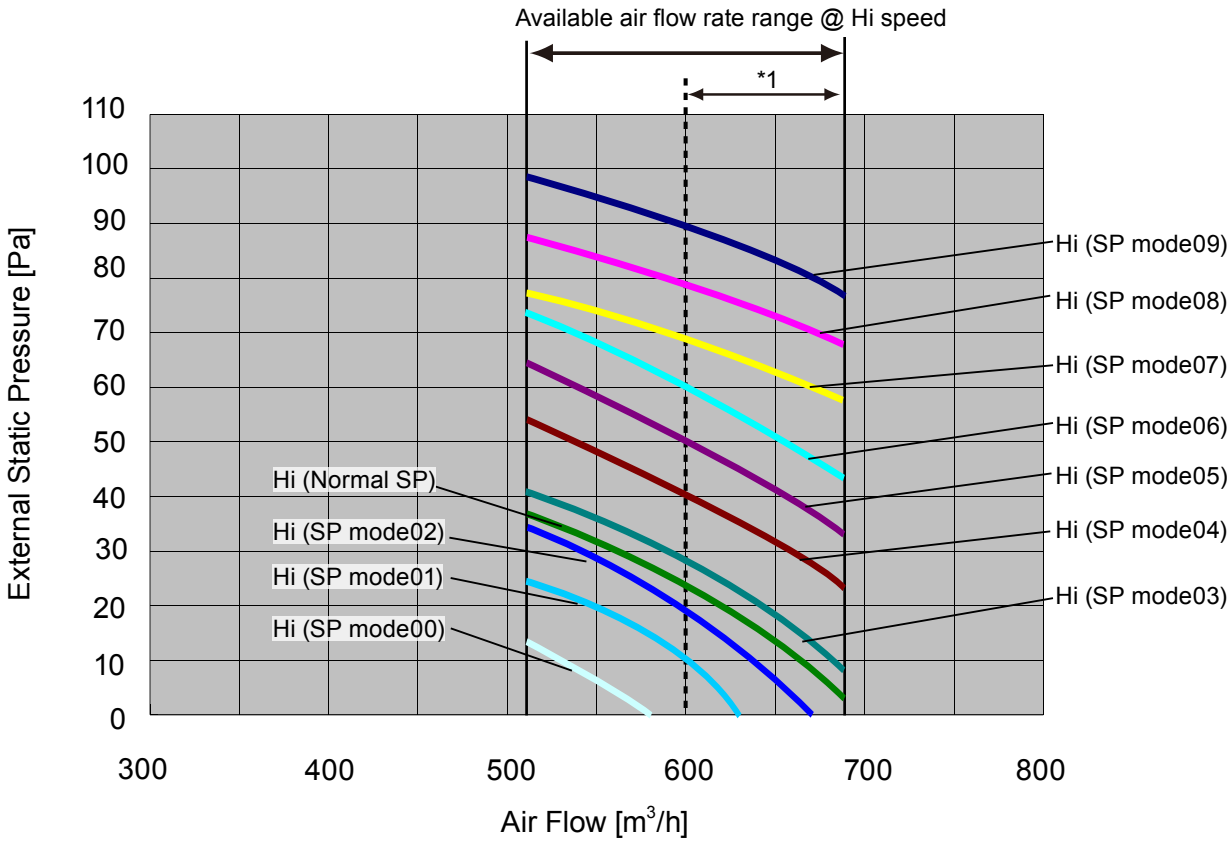

*1: Available air flow rate range when Auto louver grille (option) is installed.
Fan speed : High
Vertical flap : Up

INDOOR UNITS

Cooling

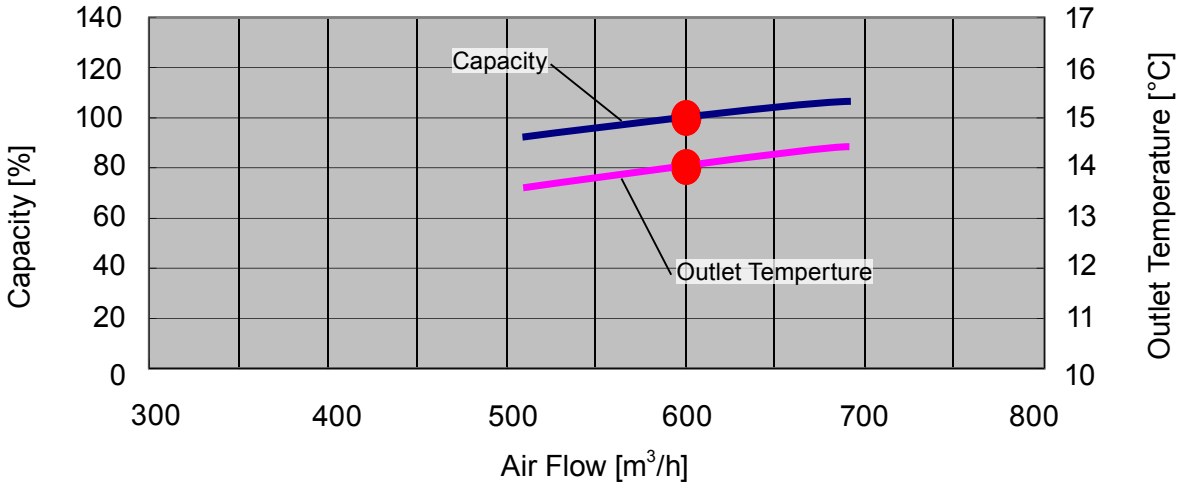

Heating

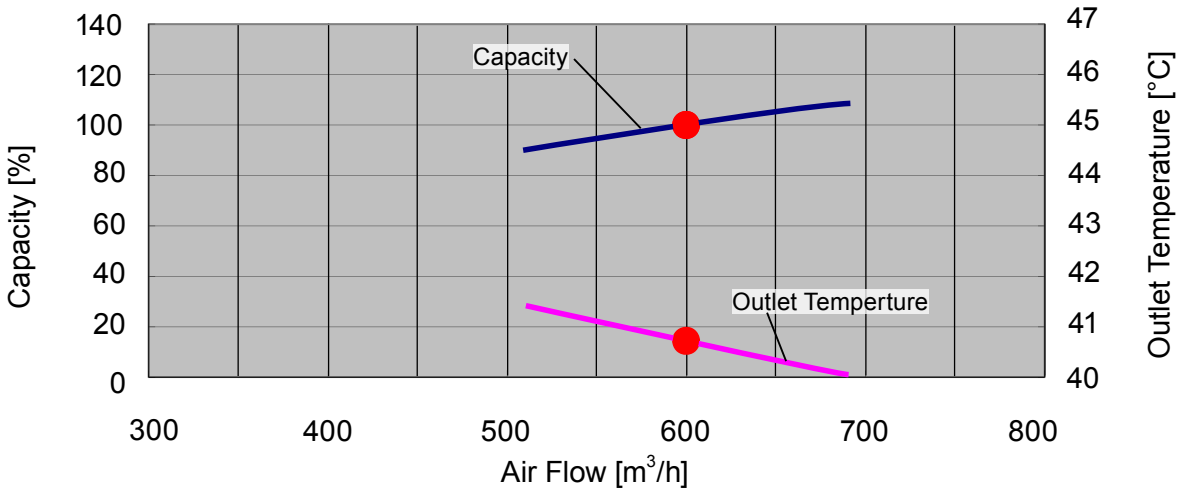

■ MODEL : ARXD12GALH

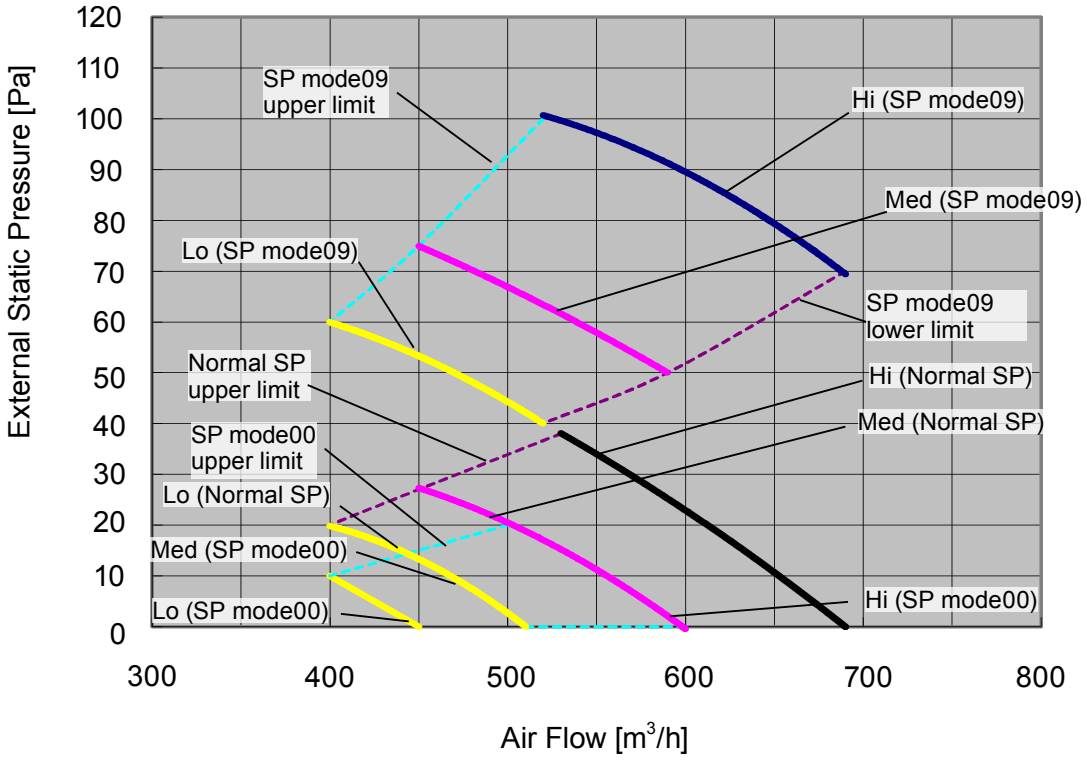

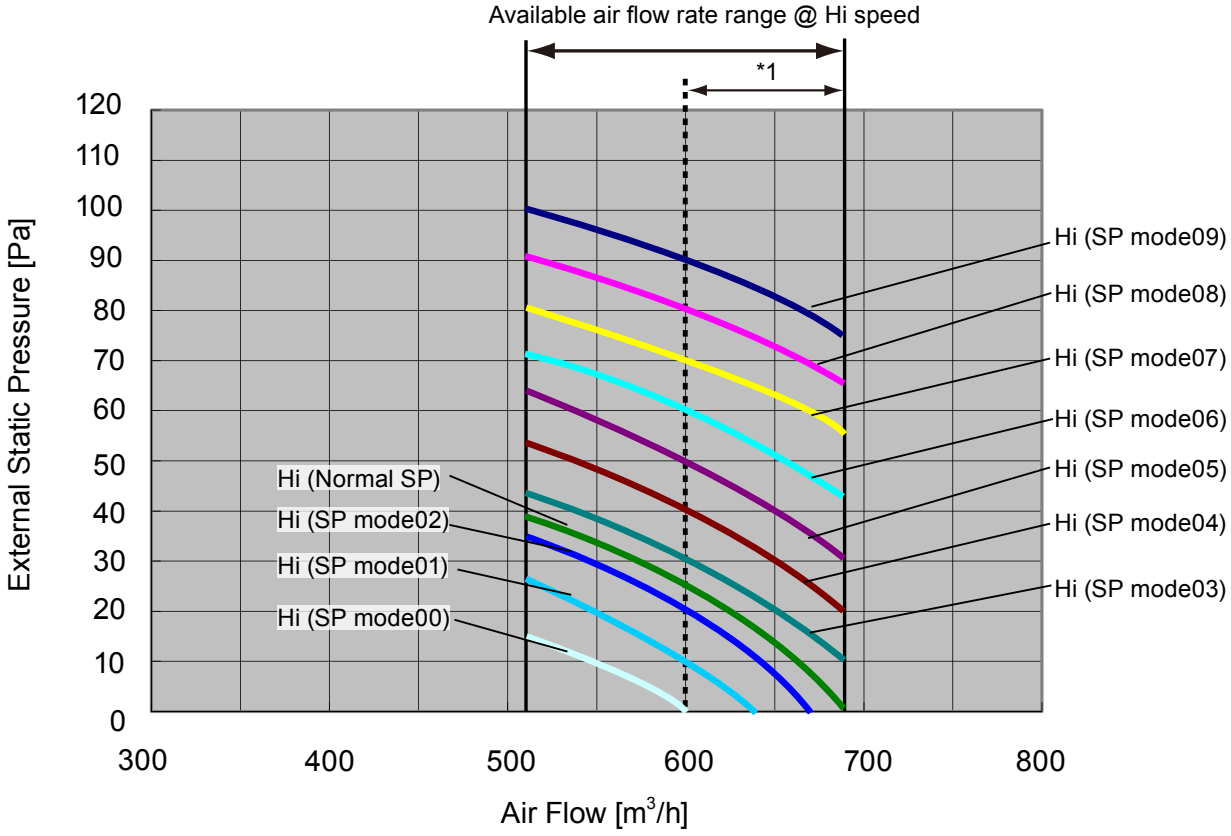

*1: Available air flow rate range when Auto louver grille (option) is installed.
Fan speed : High
Vertical flap : Up

INDOOR UNITS

Cooling

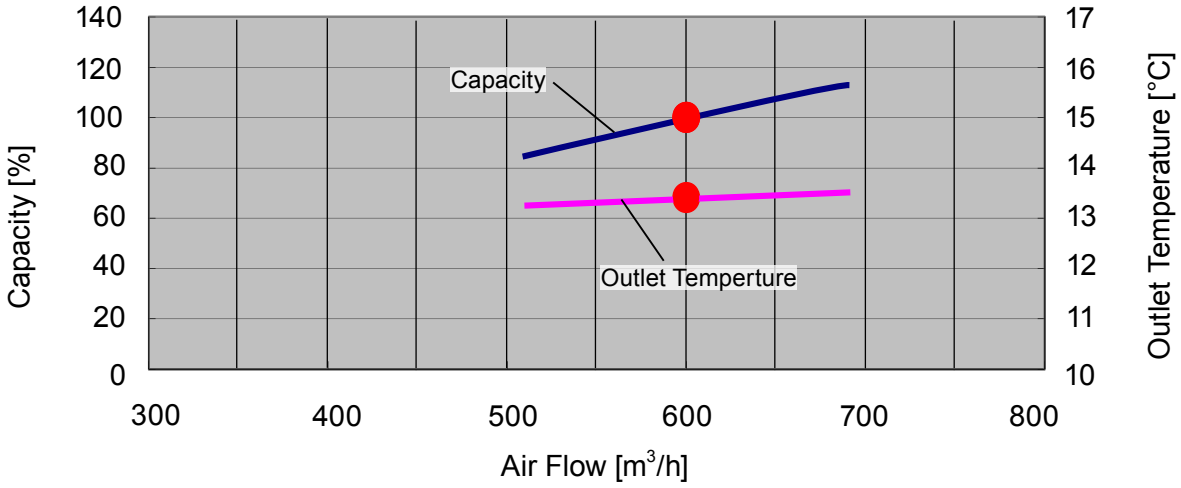

Heating

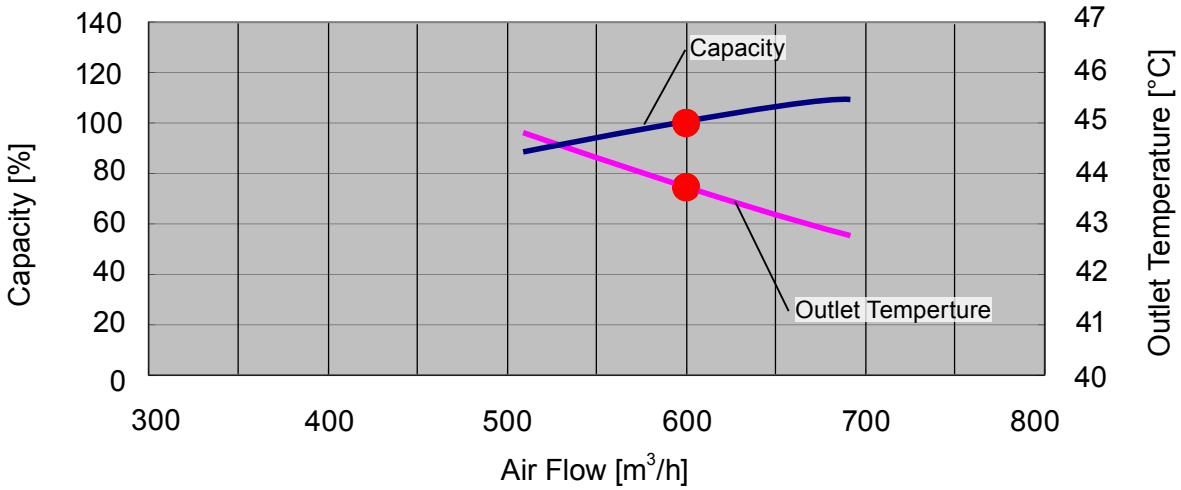

■ MODEL : ARXD14GALH

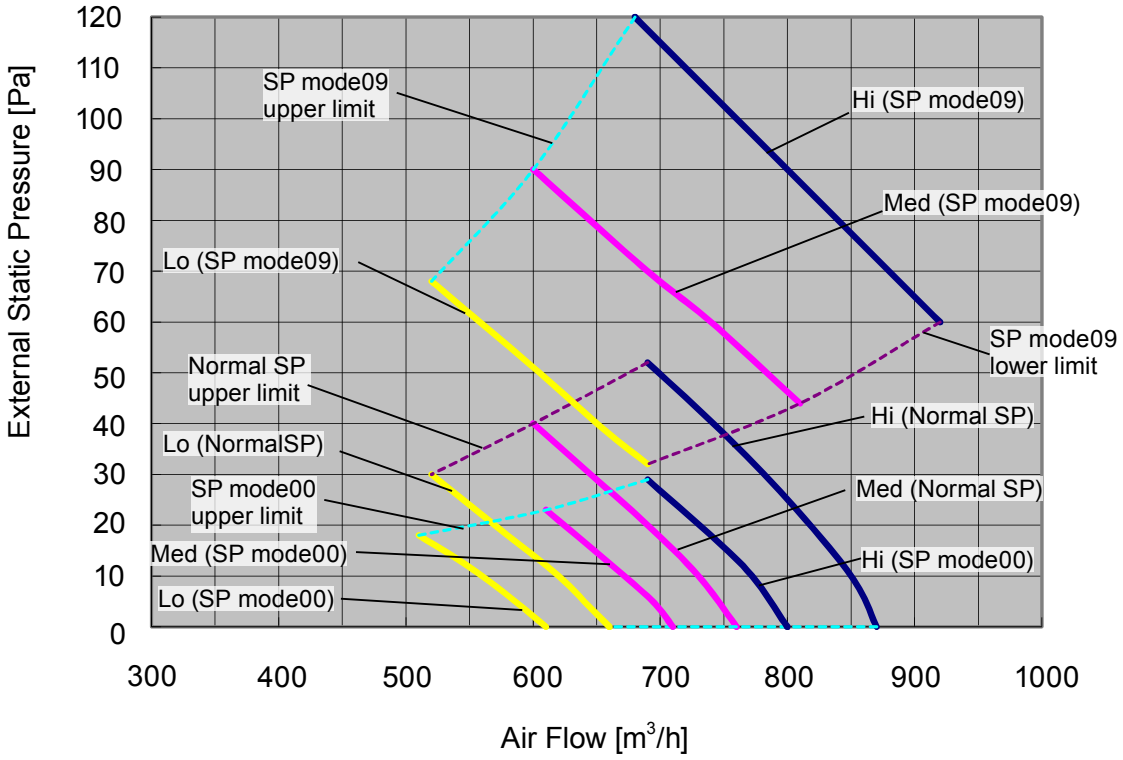

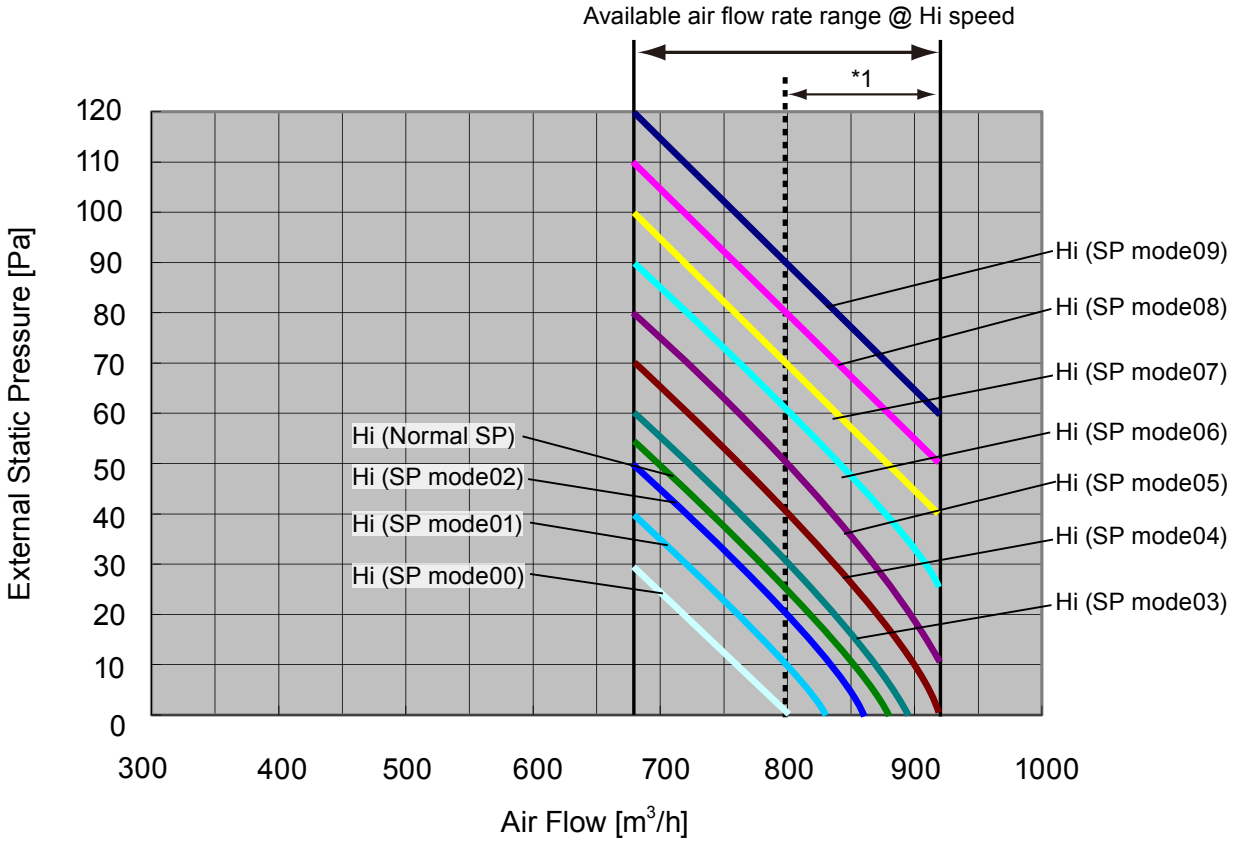

*1: Available air flow rate range when Auto louver grille (option) is installed.
Fan speed : High
Vertical flap : Up

INDOOR UNITS

Cooling

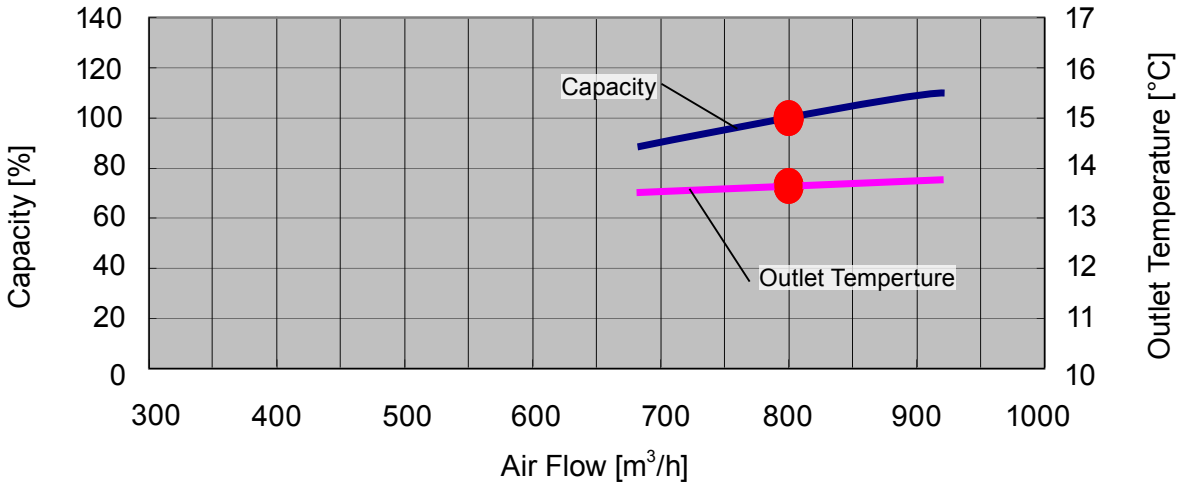

Heating

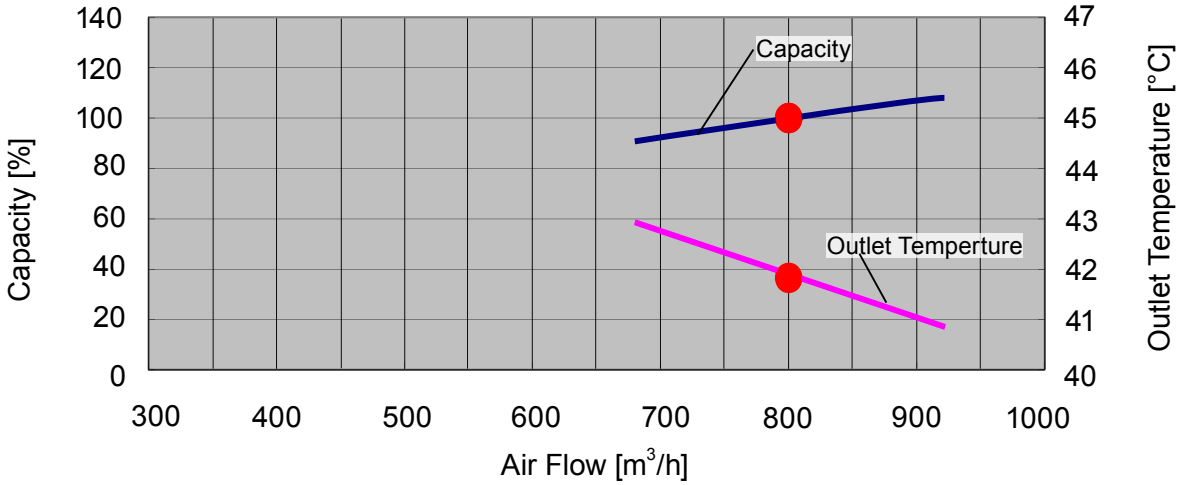

■ MODEL : ARXD18GALH

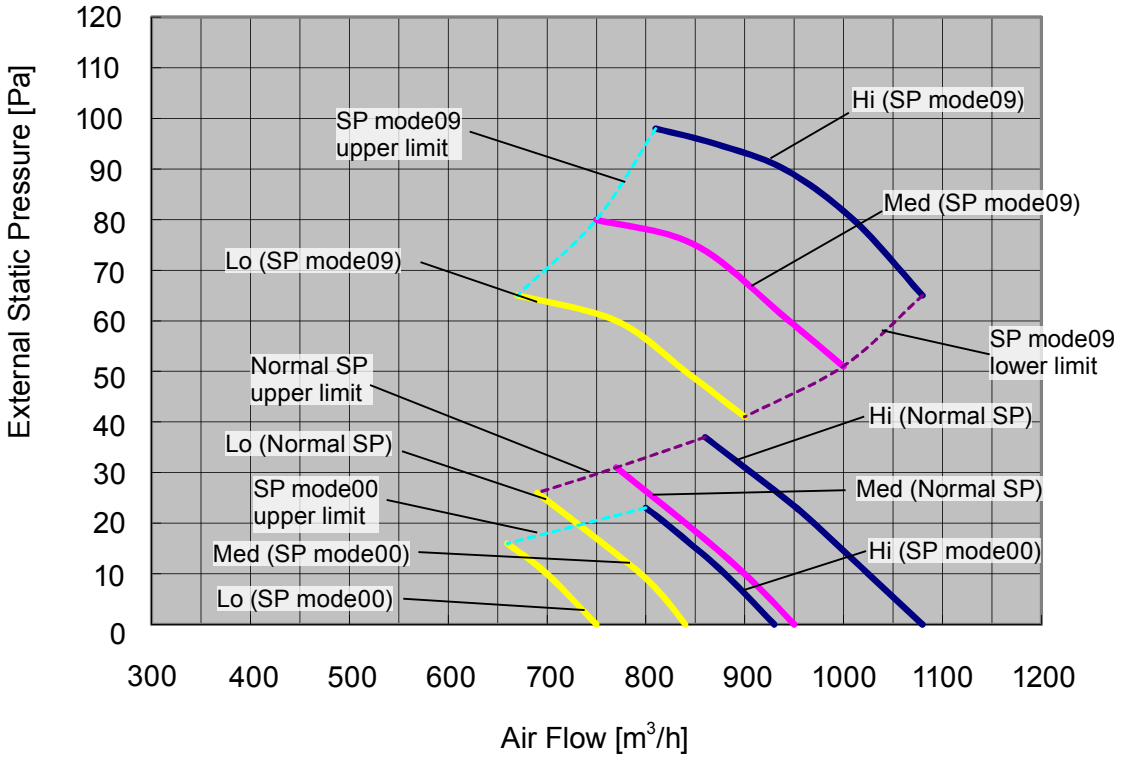

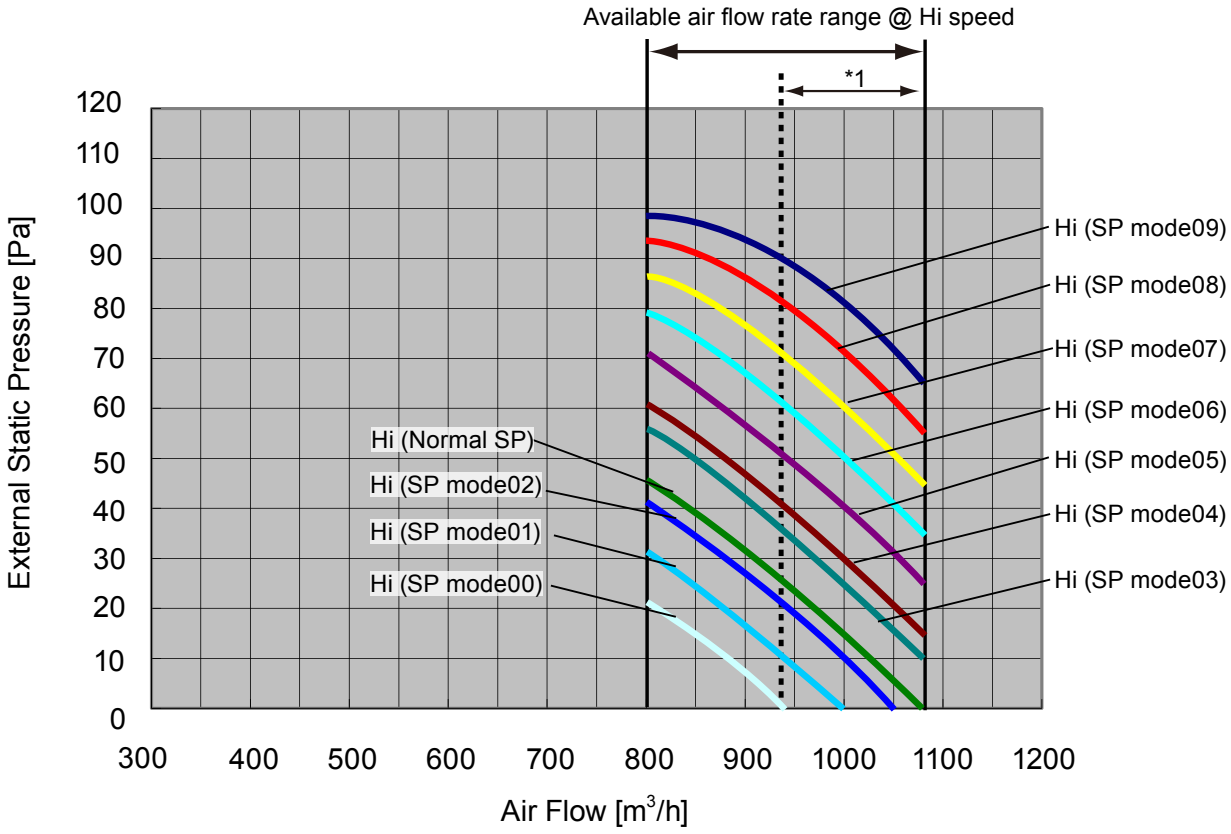

*1: Available air flow rate range when Auto louver grille (option) is installed.
Fan speed : High
Vertical flap : Up

Cooling

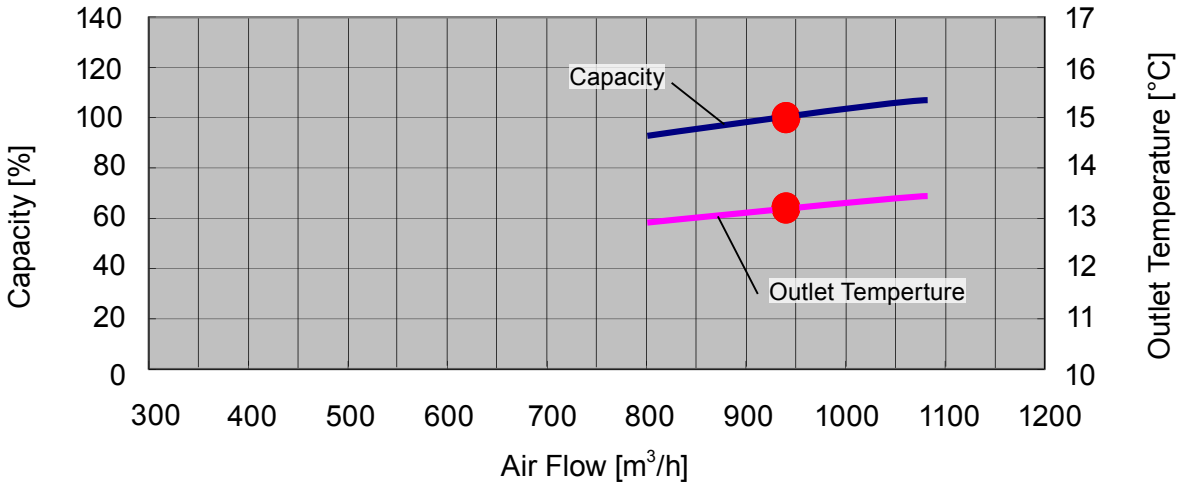

Heating

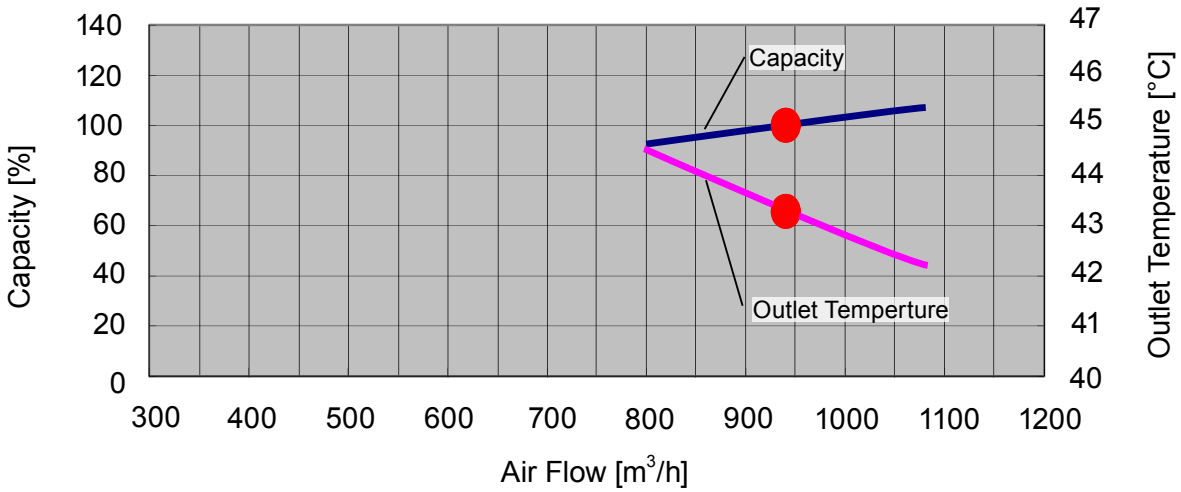

INDOOR UNITS

■ MODEL : ARXD24GALH

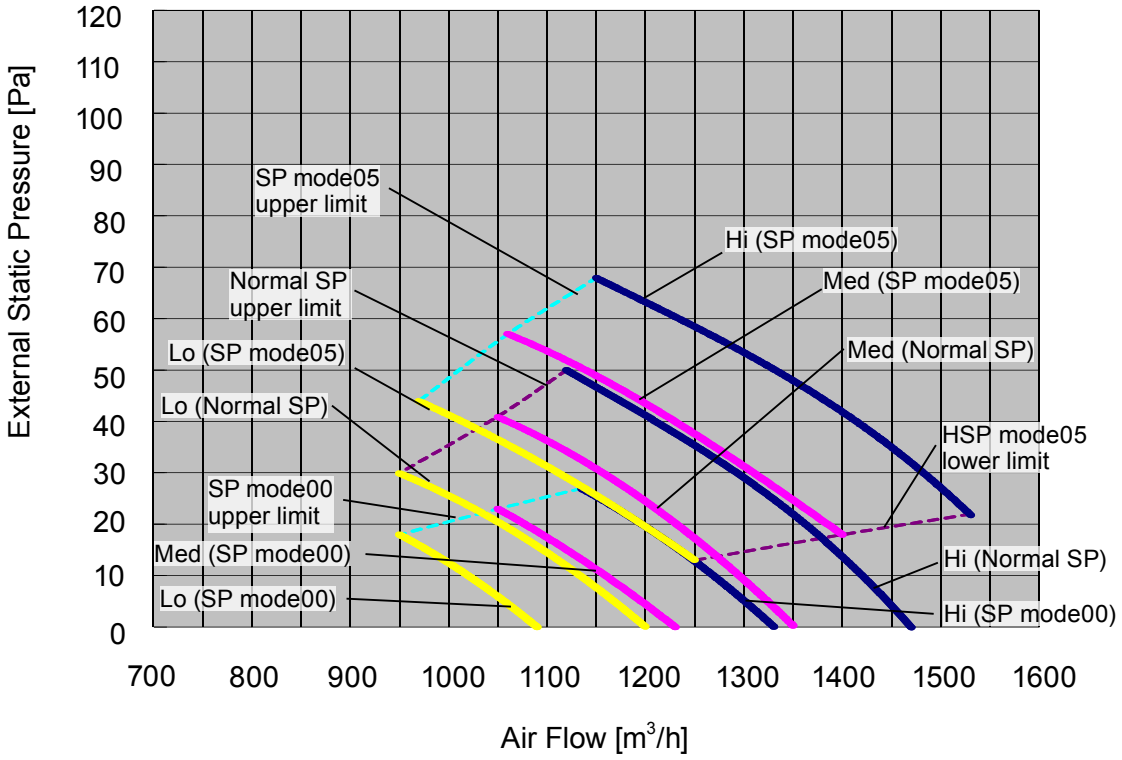

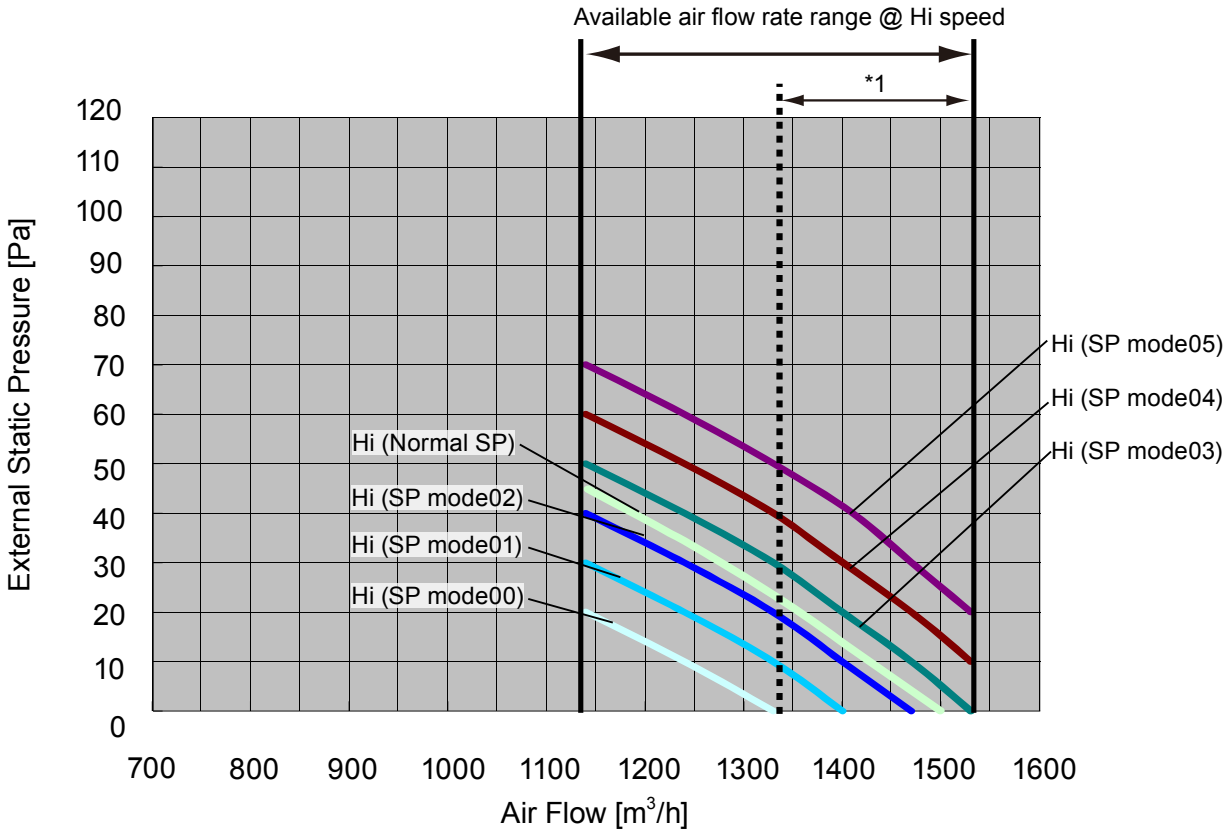

*1: Available air flow rate range when Auto louver grille (option) is installed.
Fan speed : High
Vertical flap : Up

Cooling

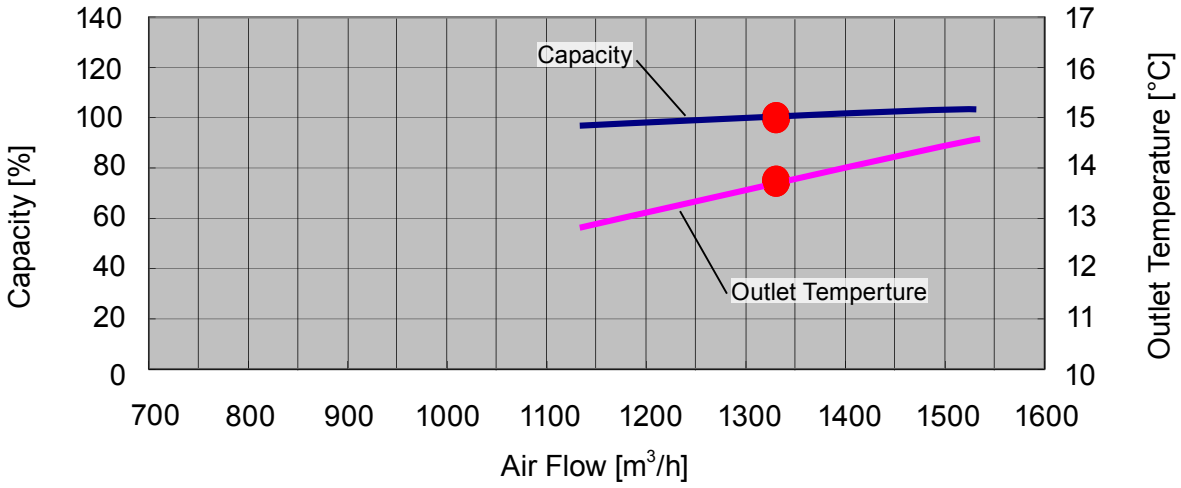

Heating

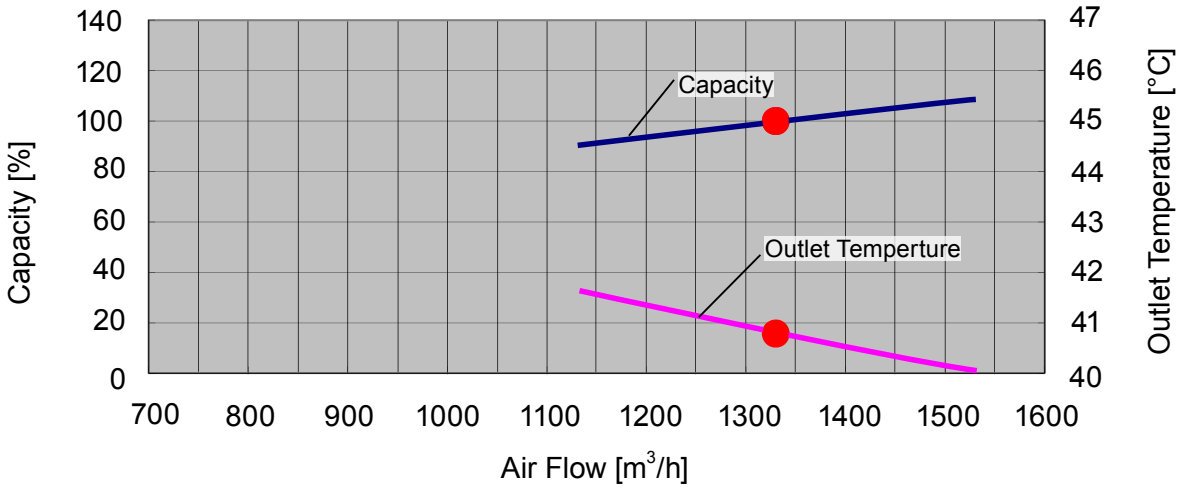

INDOOR UNITS

7-3. MEDIUM STATIC PRESSURE DUCT TYPE

■ MODEL : ARXA24GBLH

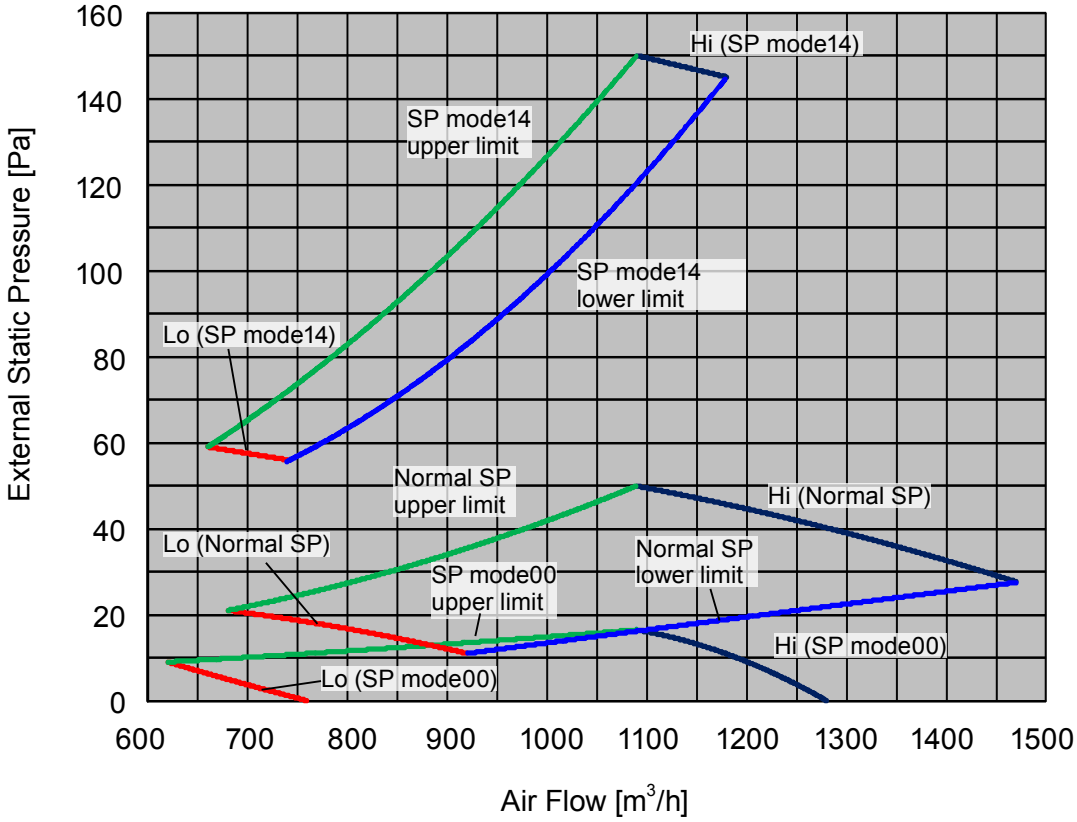

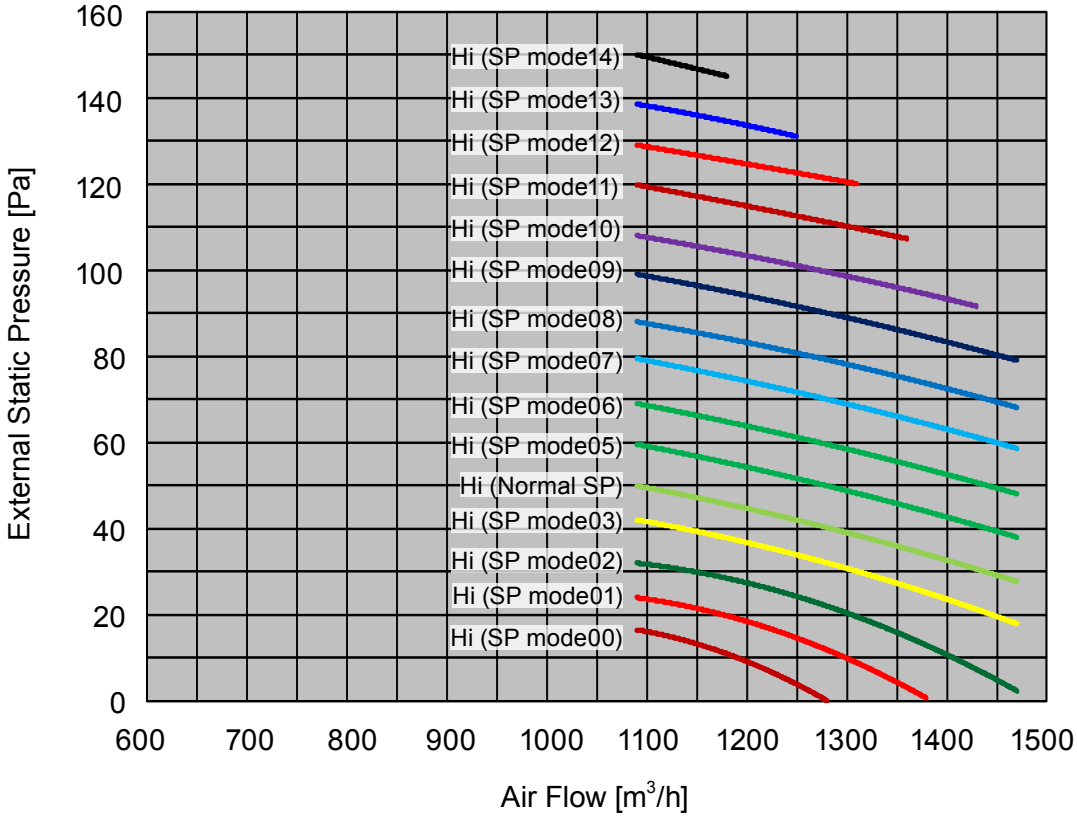

INDOOR UNITS

Cooling

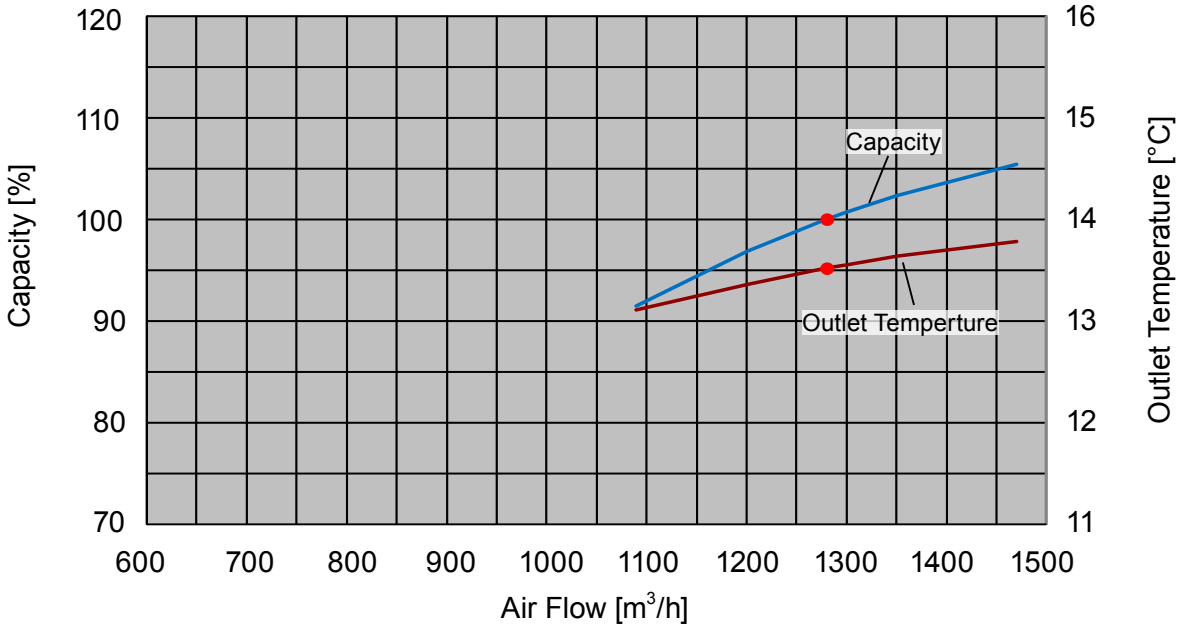

Heating

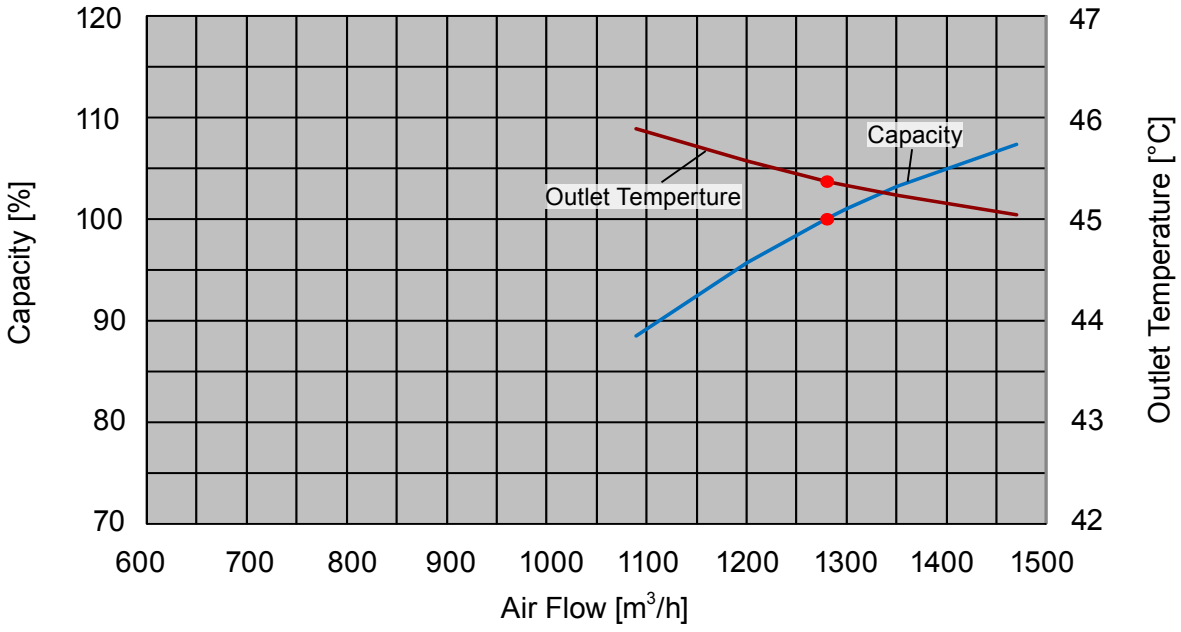

■ MODEL : ARXA30GBLH

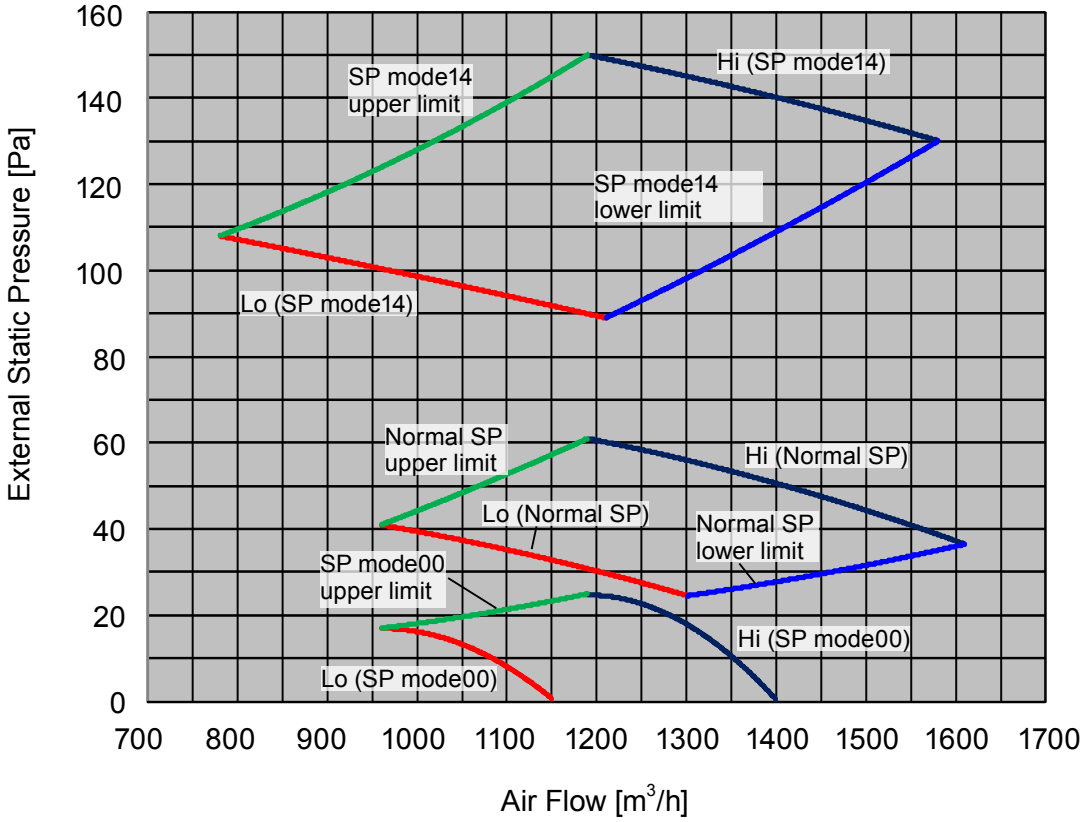

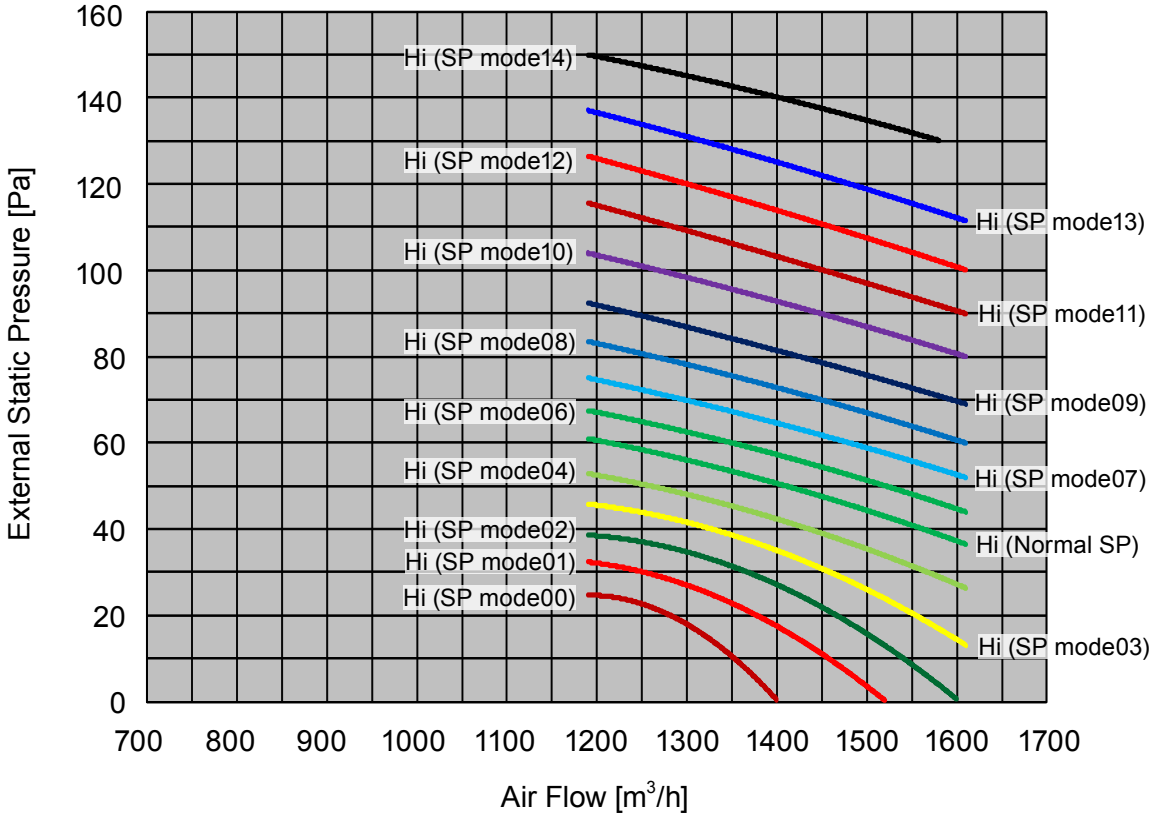

INDOOR UNITS

Cooling

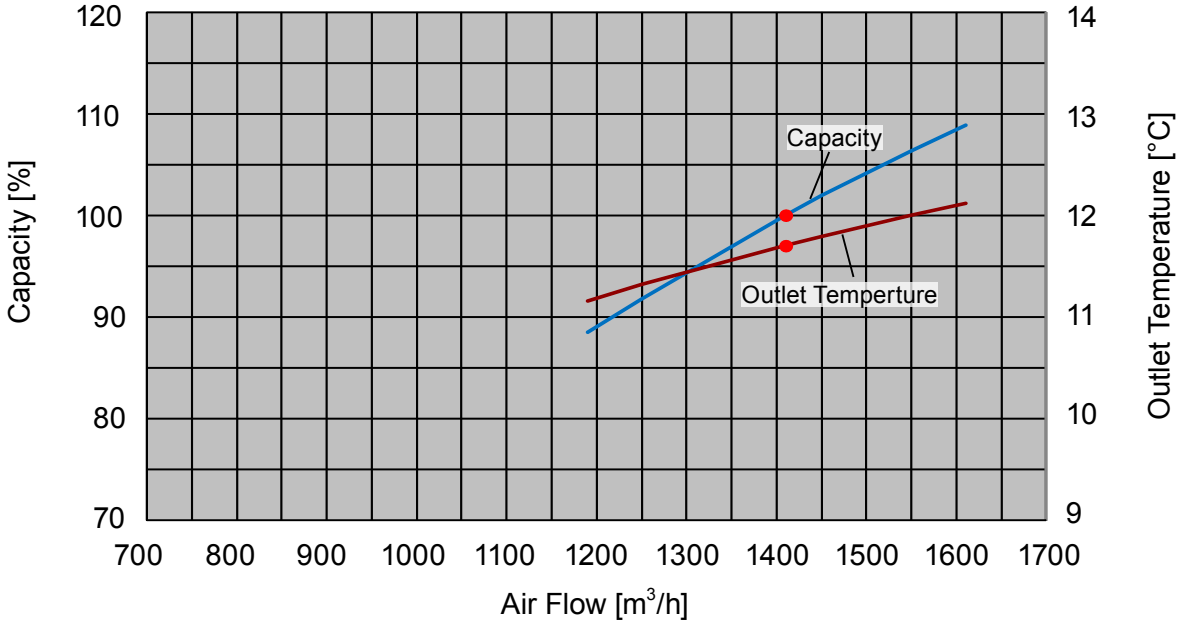

Heating

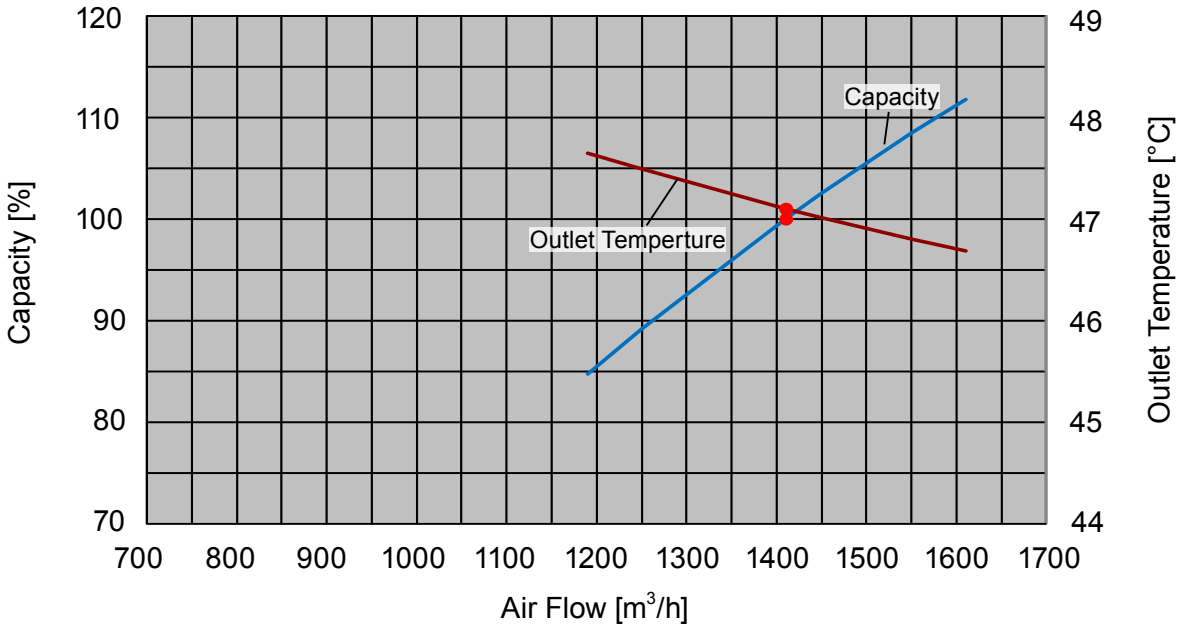

INDOOR UNITS

■ MODEL : ARXA36GBLH

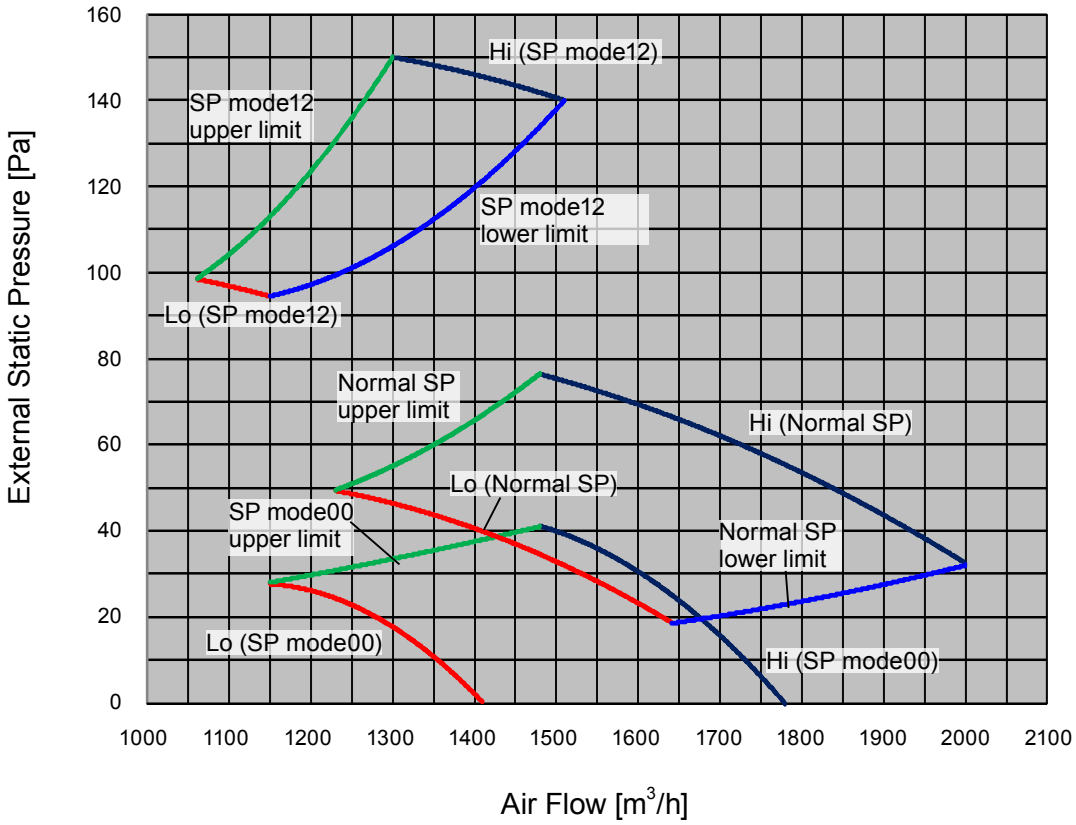

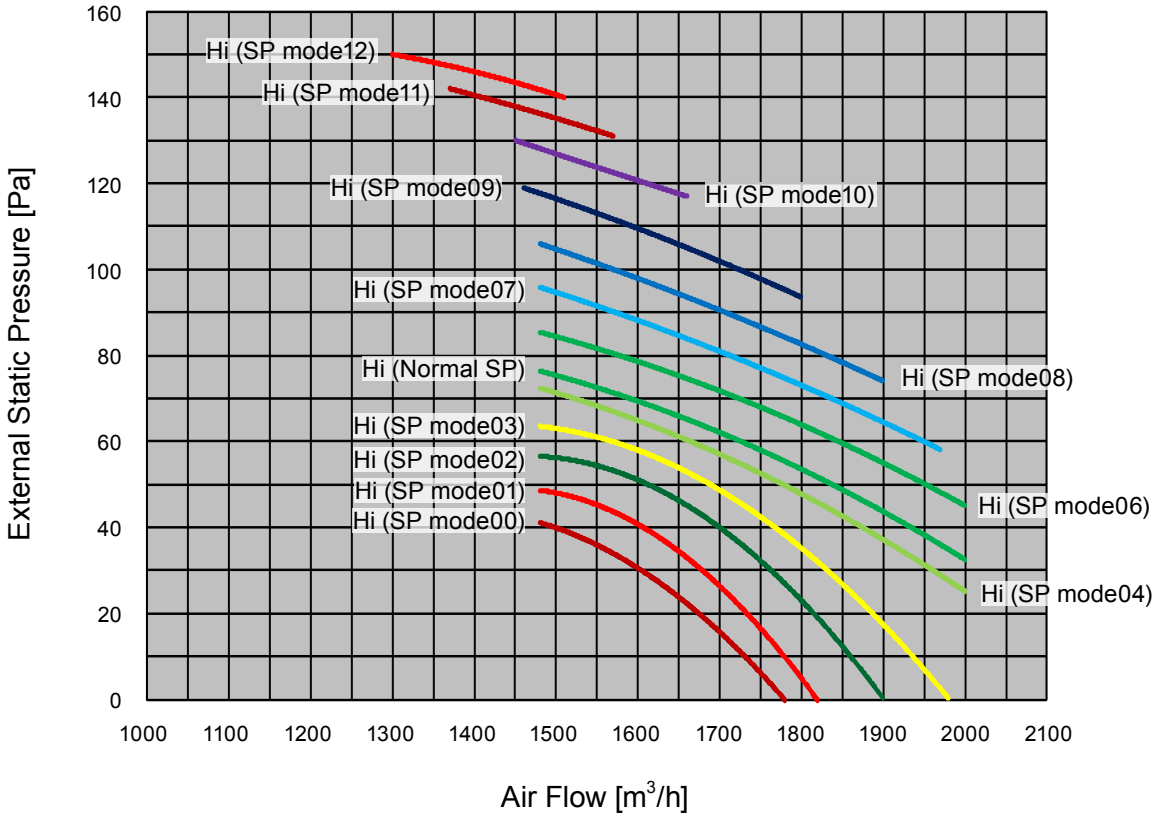

Cooling

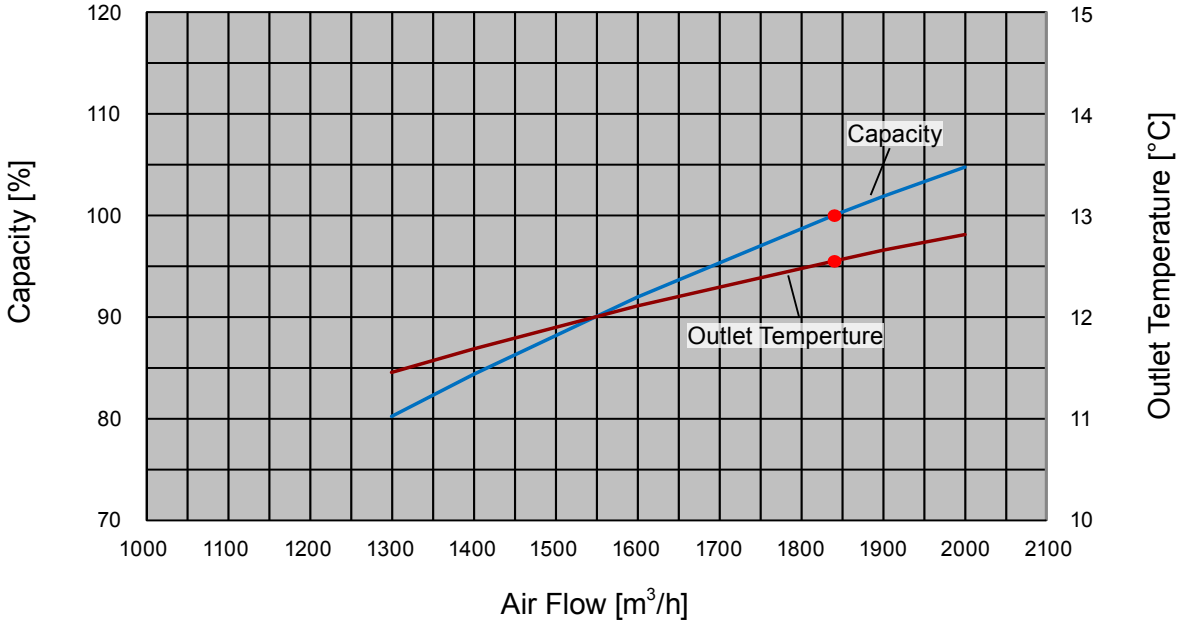

Heating

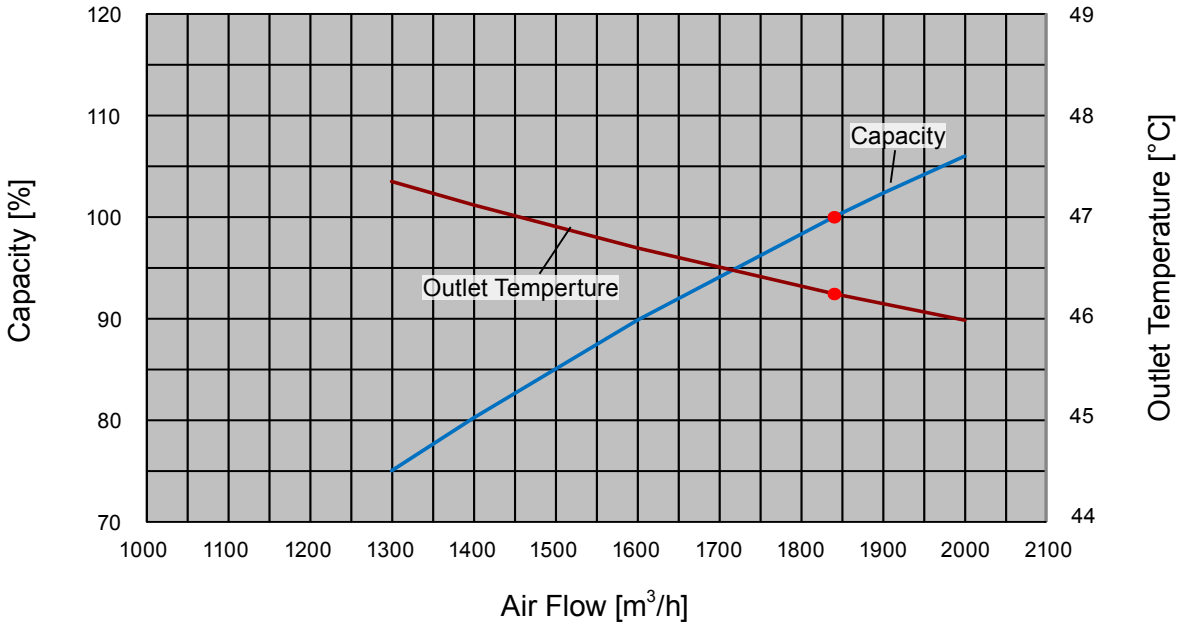

■ MODEL : ARXA45GBLH

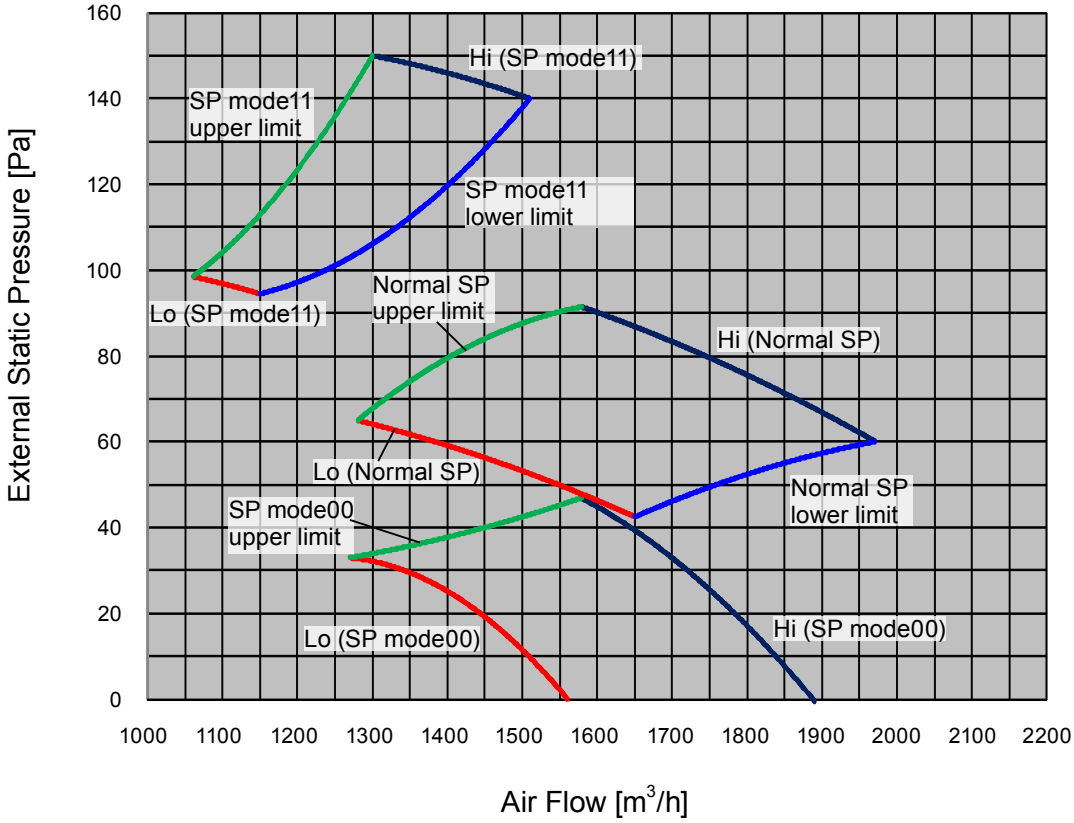

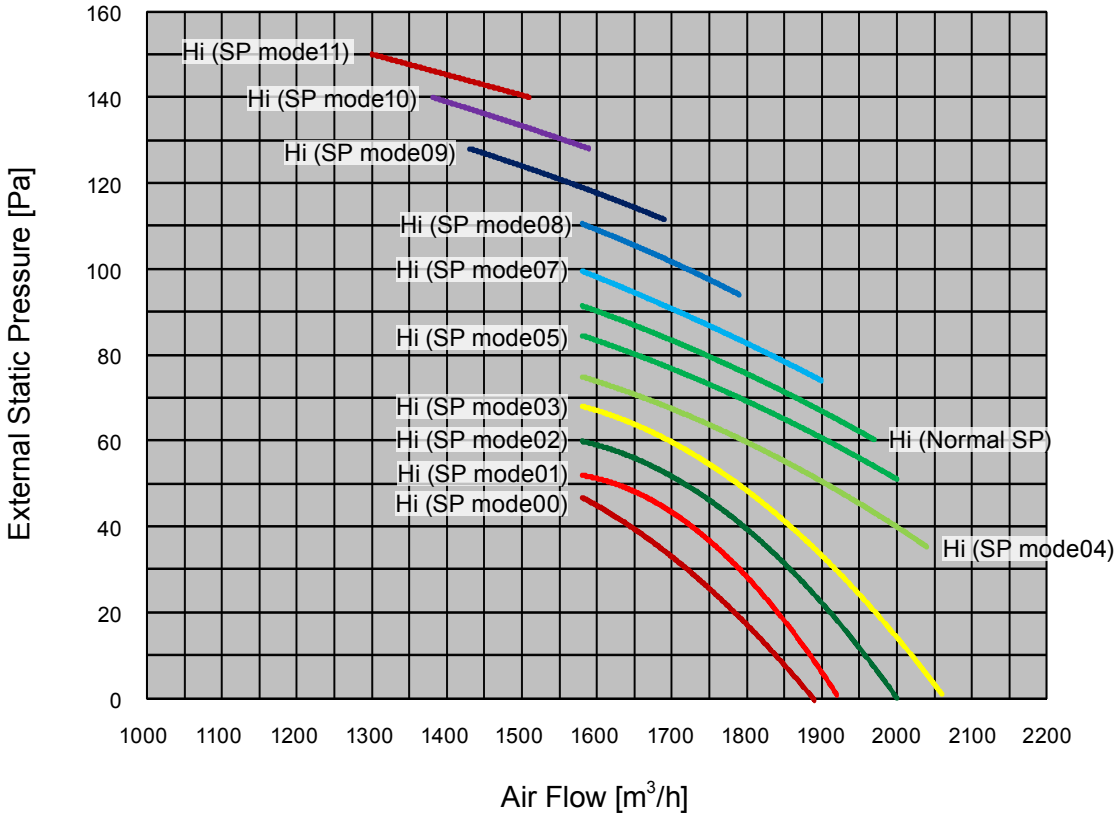

Cooling

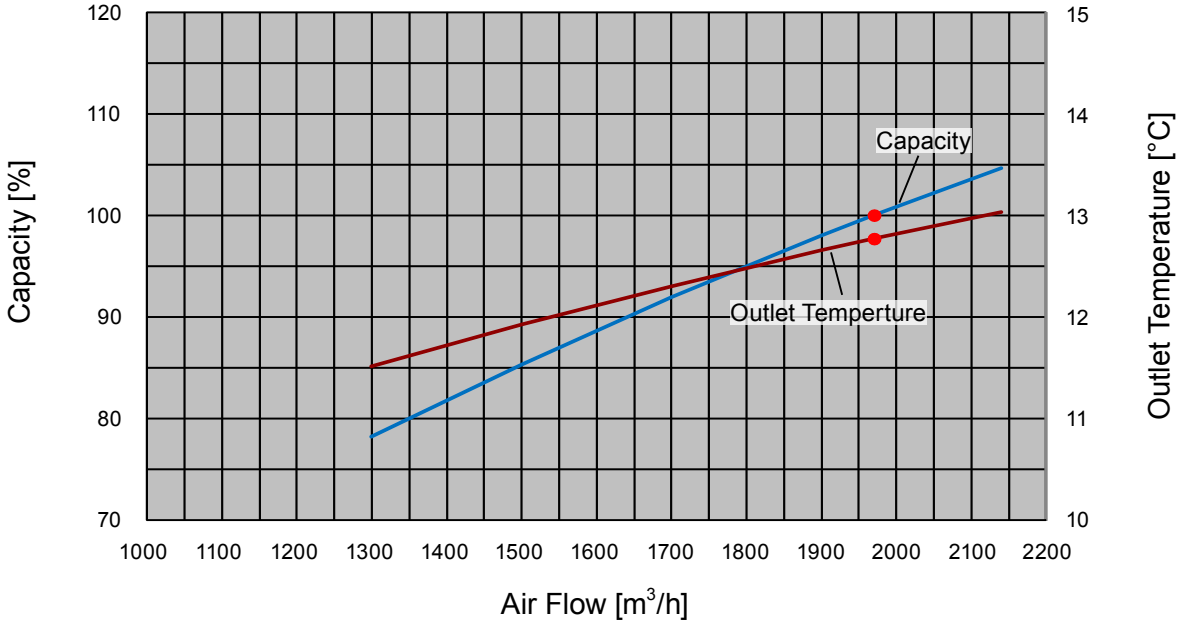

Heating

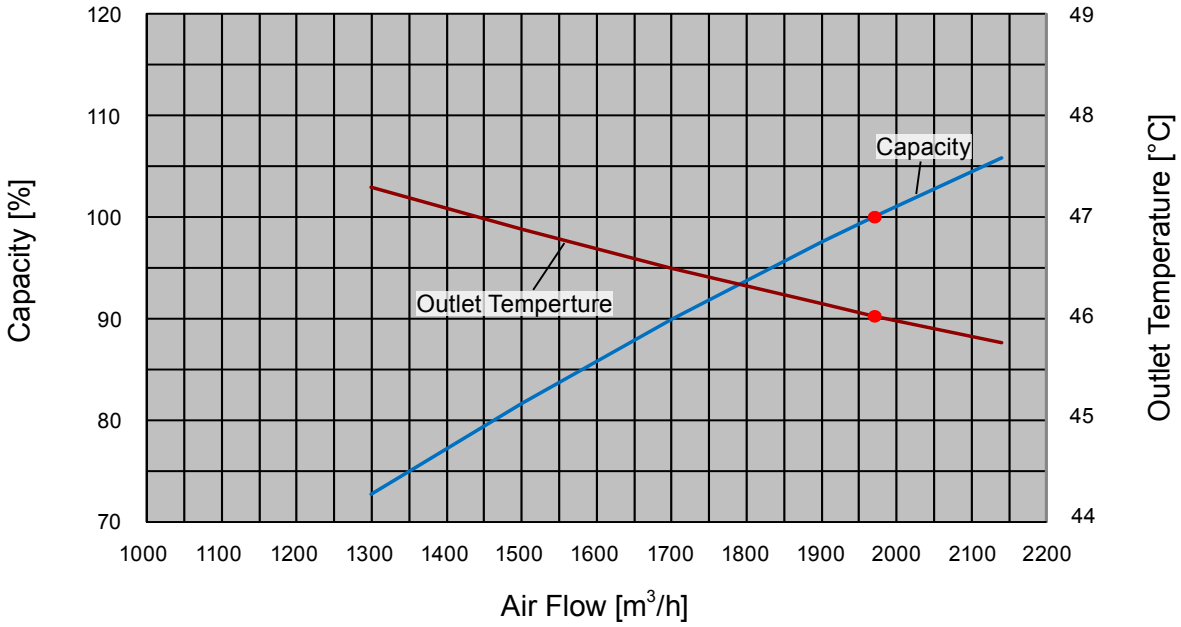

INDOOR UNITS

7-4. HIGH STATIC PRESSURE DUCT TYPE

■ MODEL : ARXC36GATH

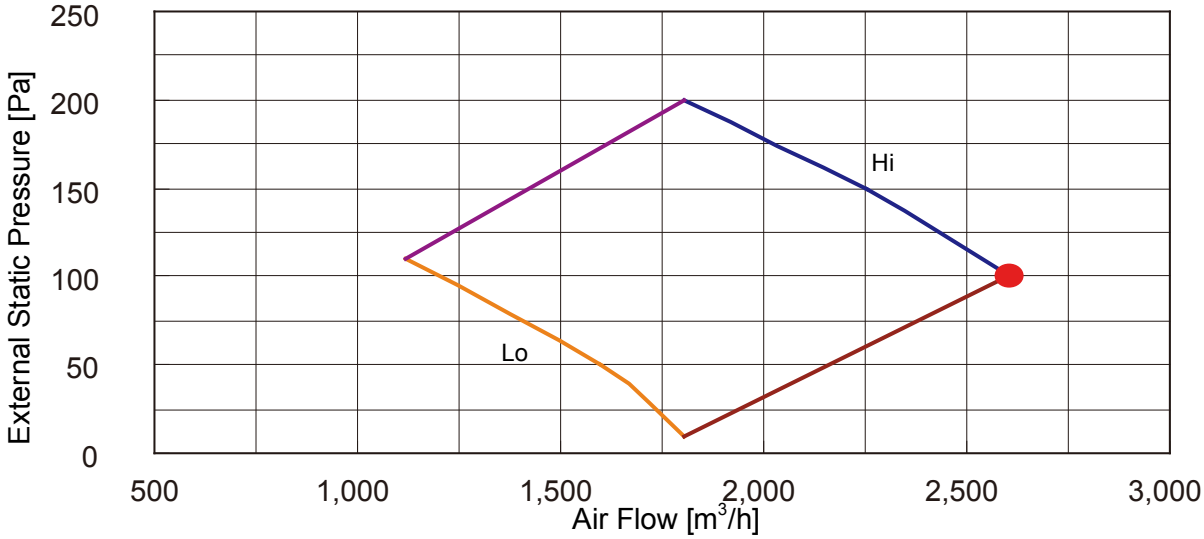

INDOOR UNITS

Cooling

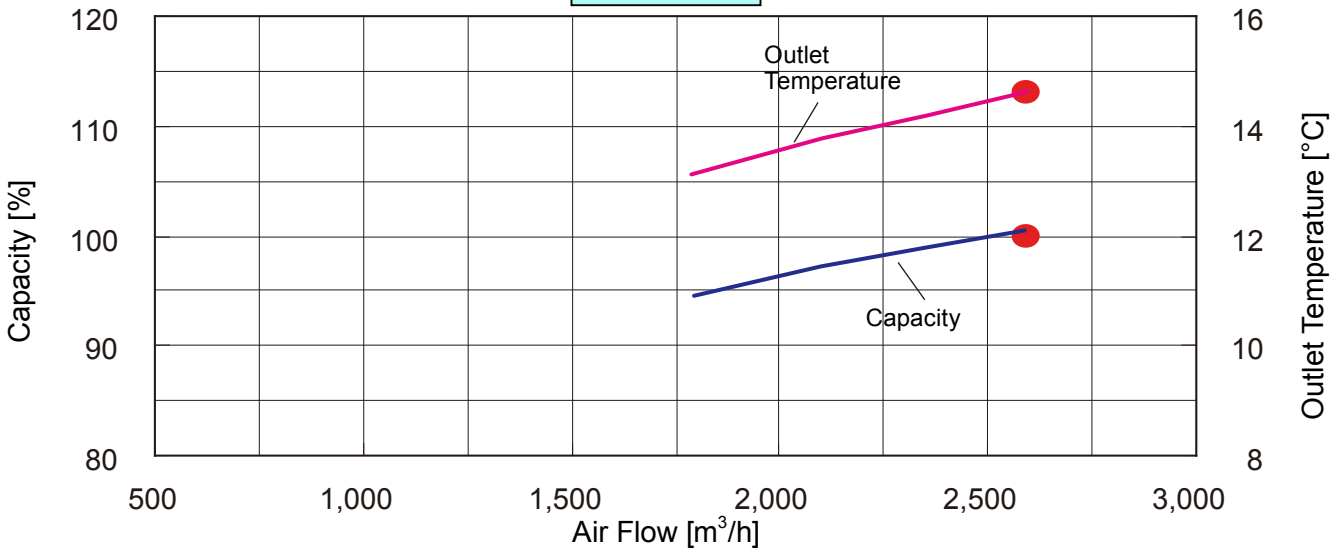

Heating

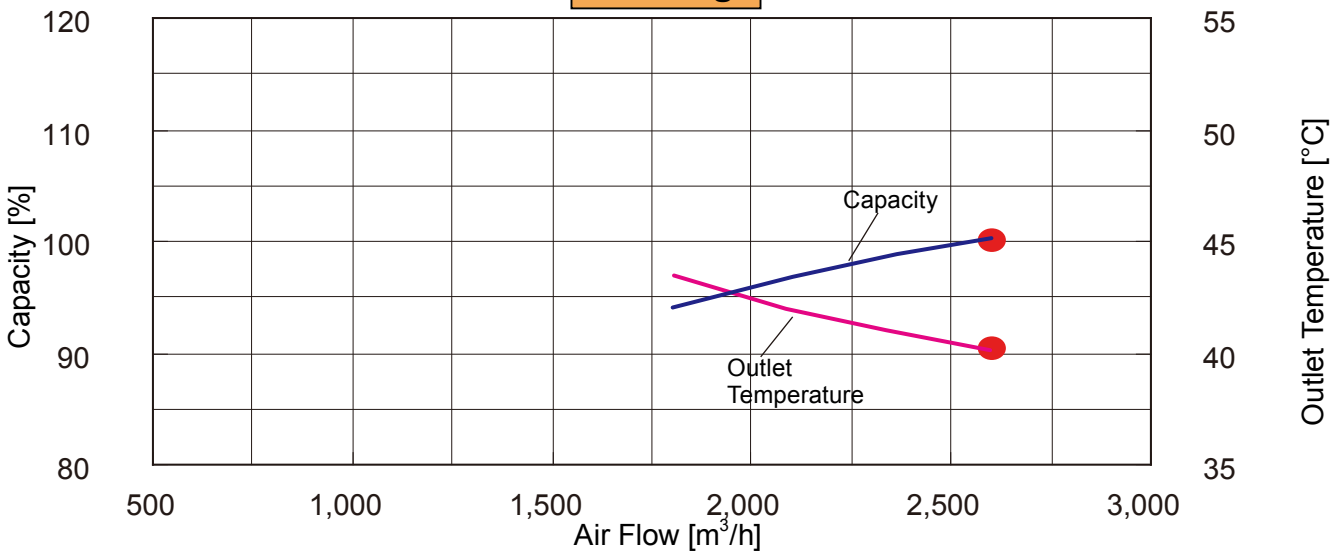

■ MODEL : ARXC45GATH

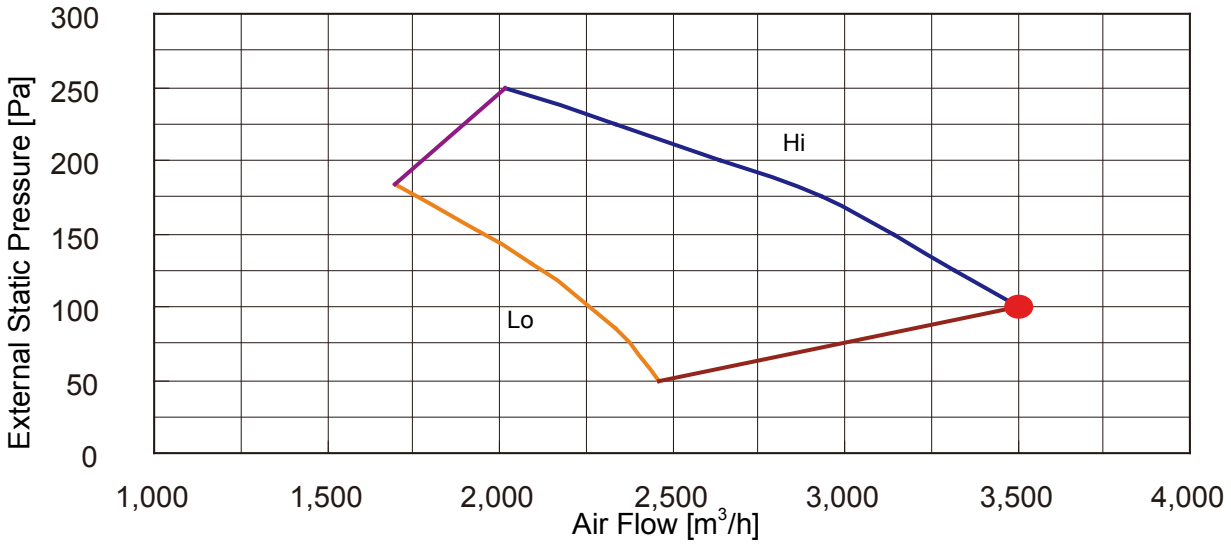

Cooling

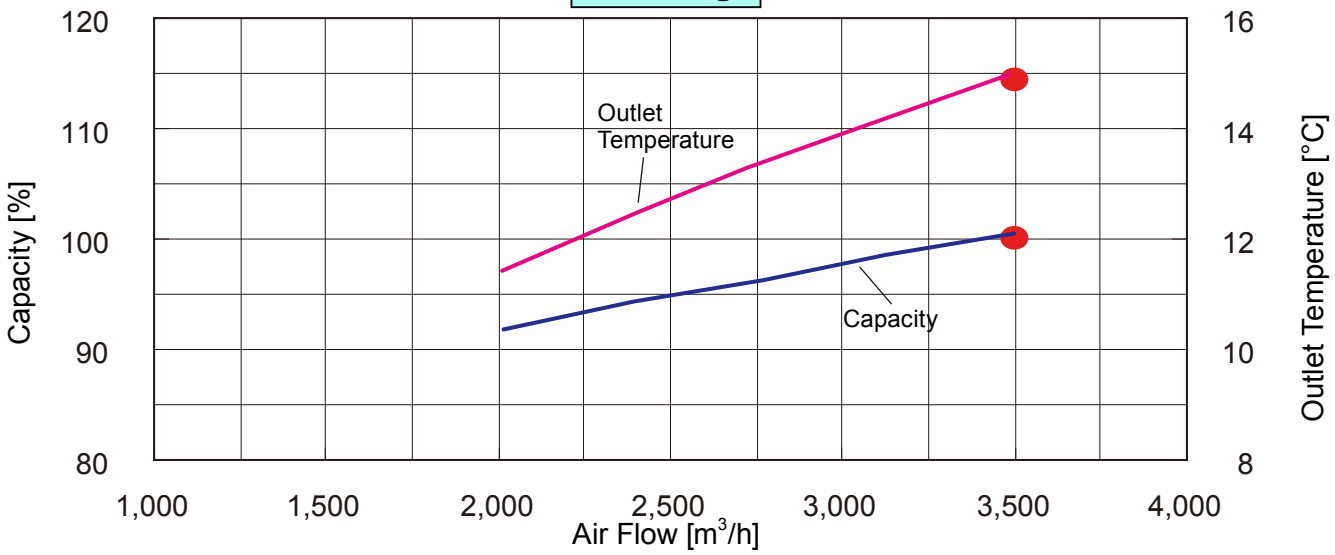

Heating

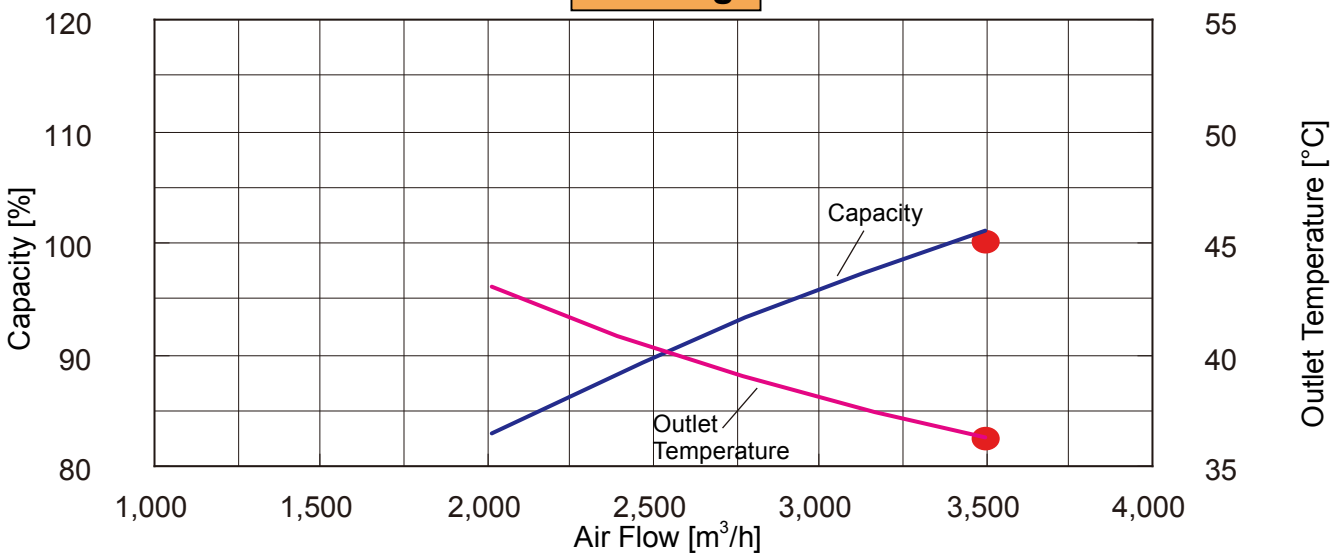

■ MODEL : ARXC60GATH

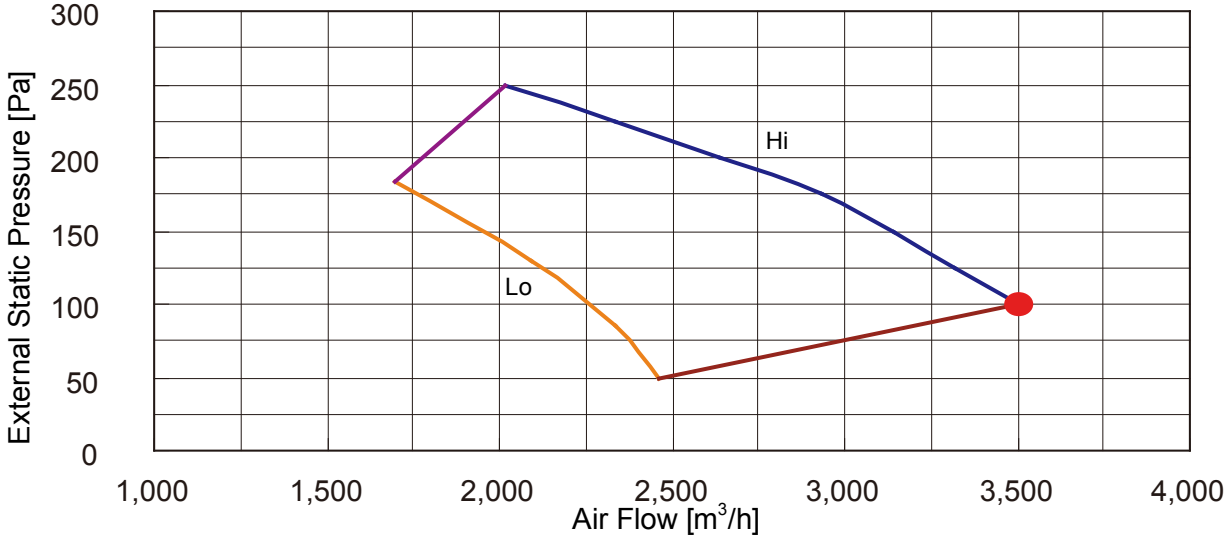

Cooling

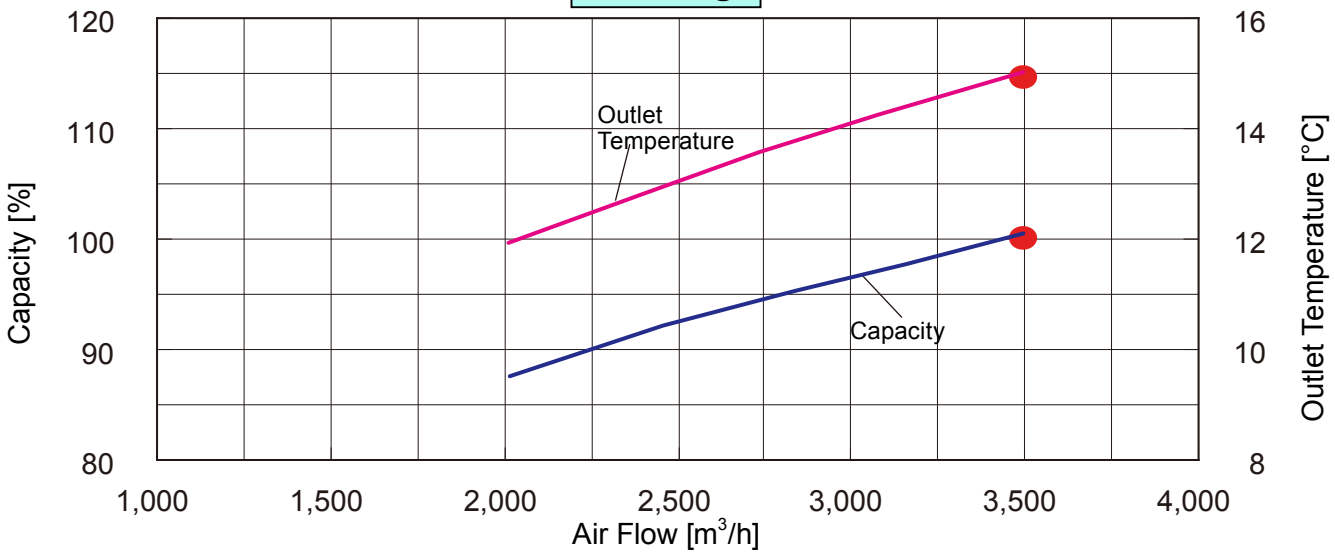

Heating

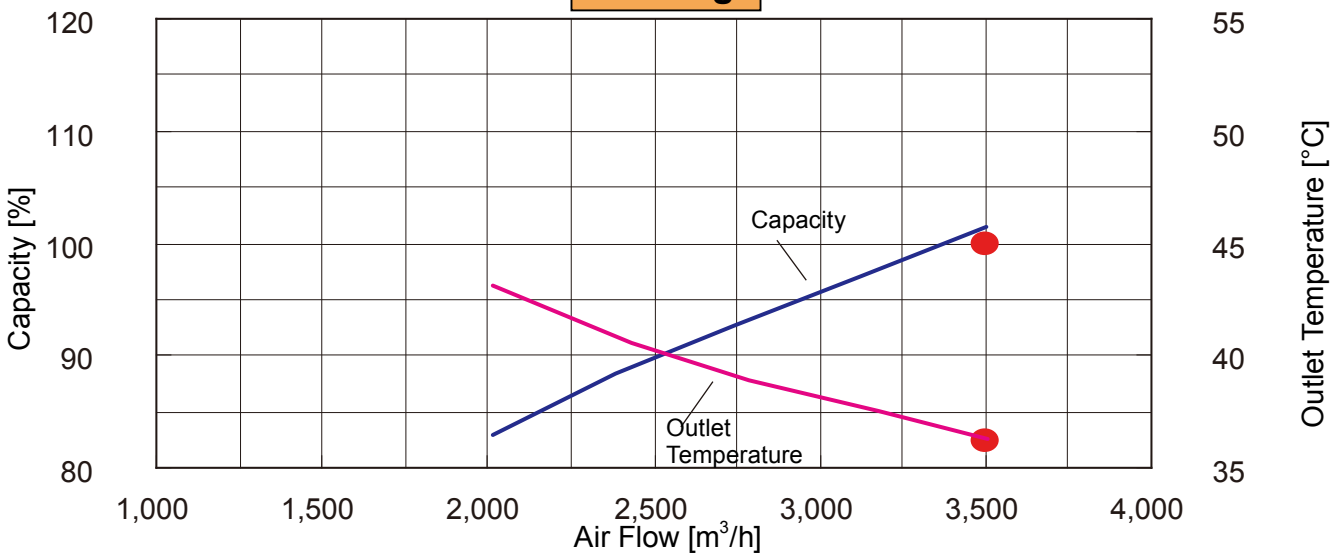

■ MODEL : ARXC72GATH

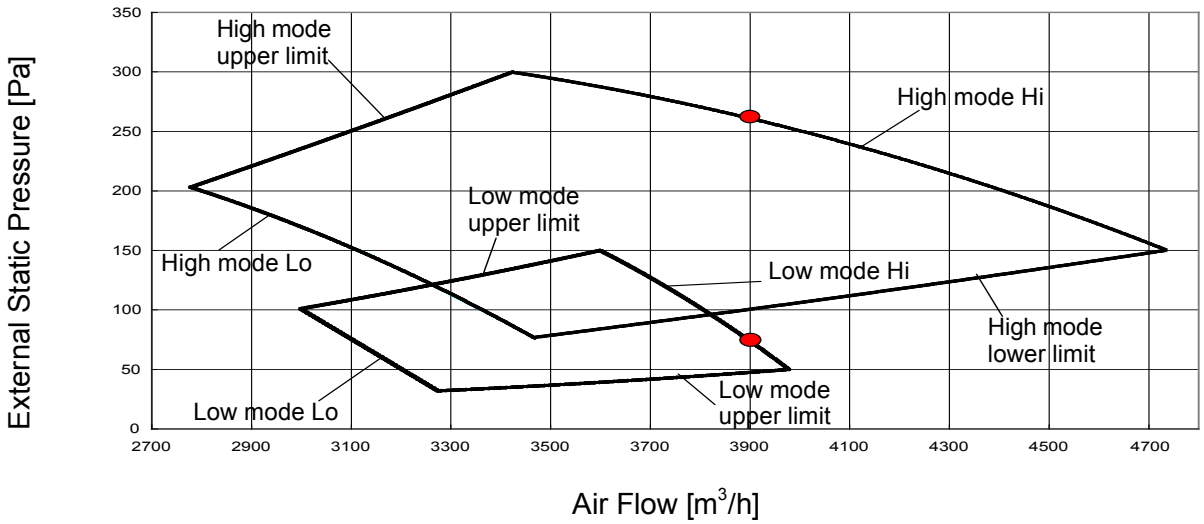

Cooling

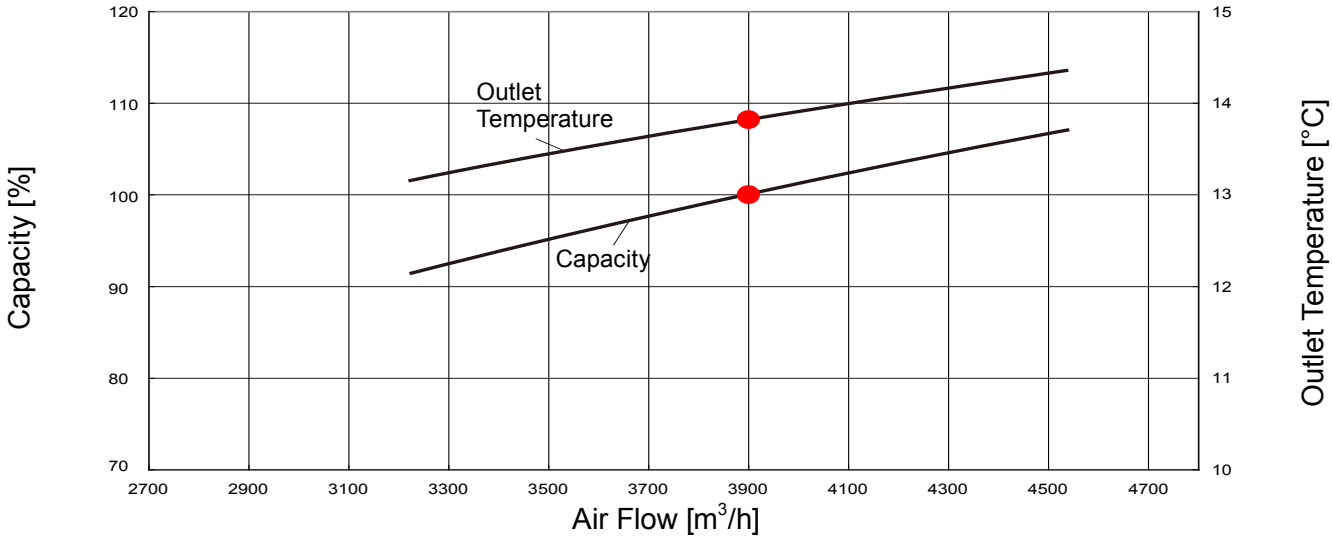

Heating

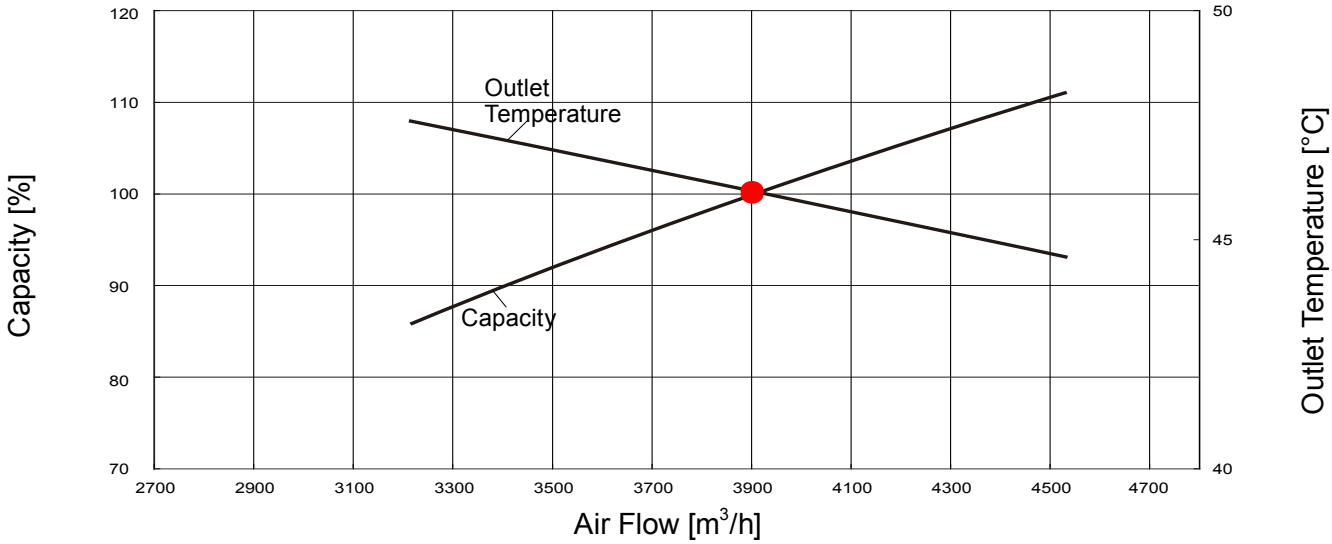

■ MODEL : ARXC90GATH

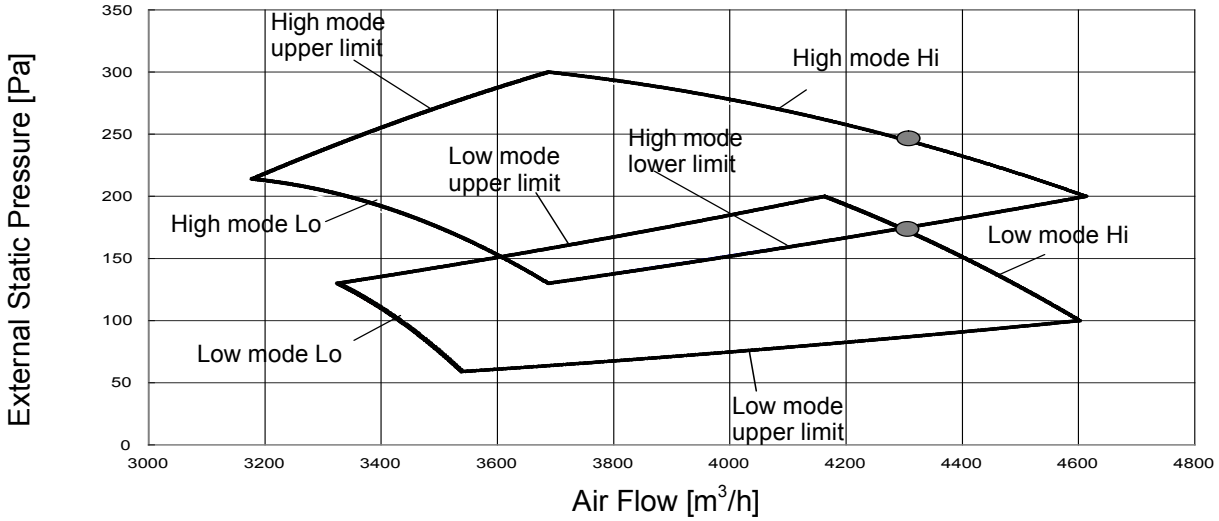

Cooling

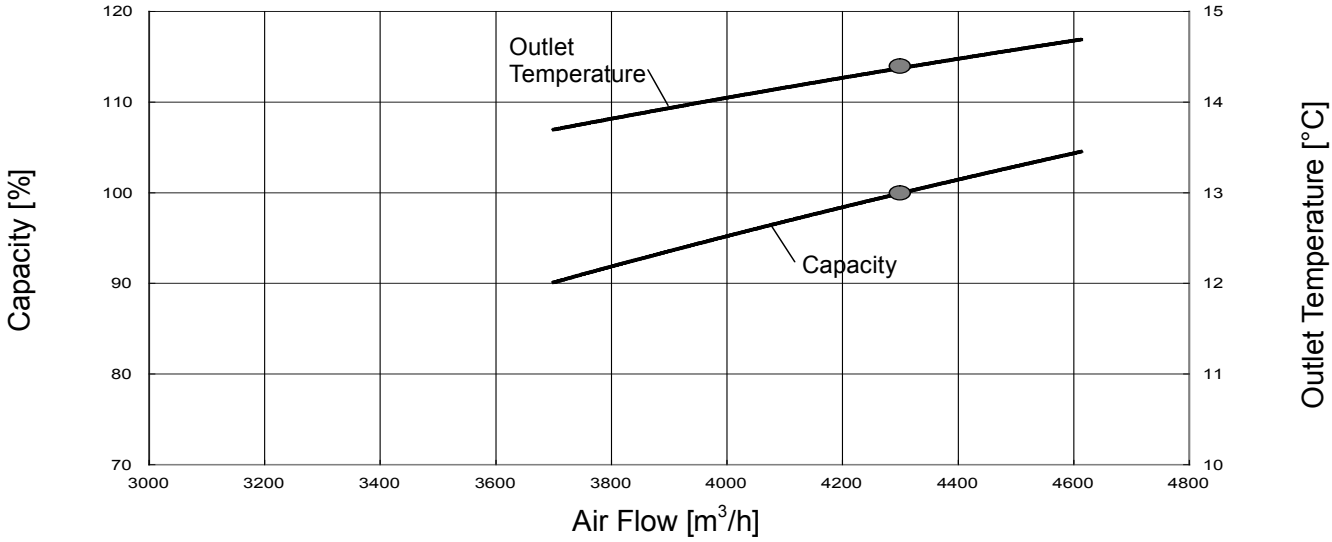

Heating

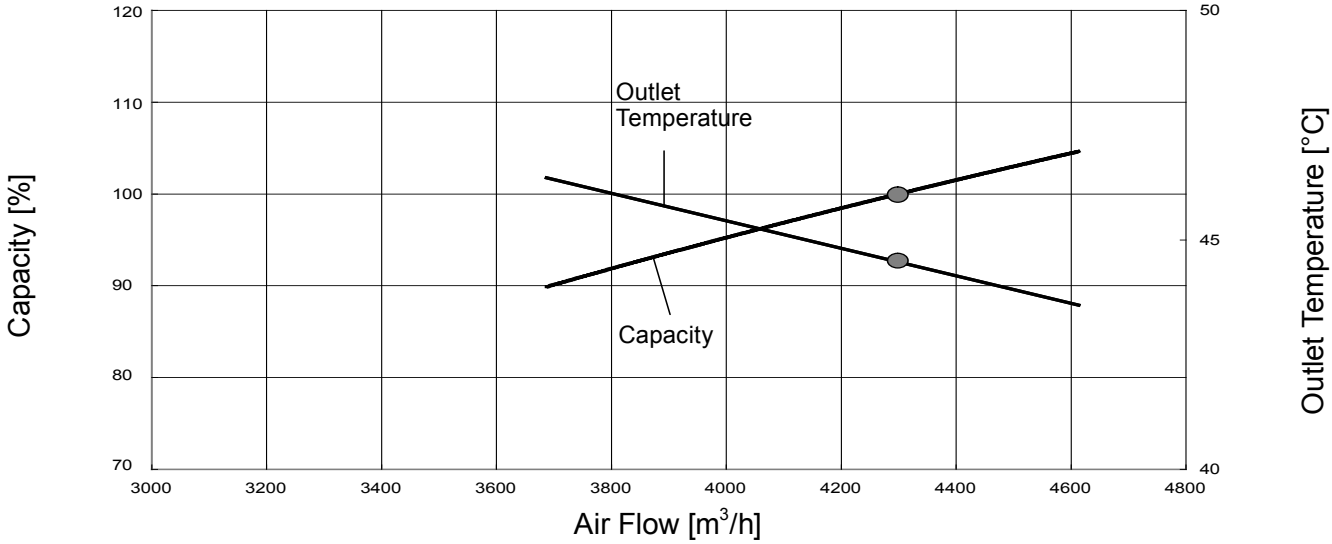

7-5. CEILING TYPE (FRESH AIR)

■ MODELS : AB∗A30GATH, AB∗A36GATH, AB∗A45GATH, AB∗A54GATH

● Air flow volume - Static pressure of Fresh air intake characteristics

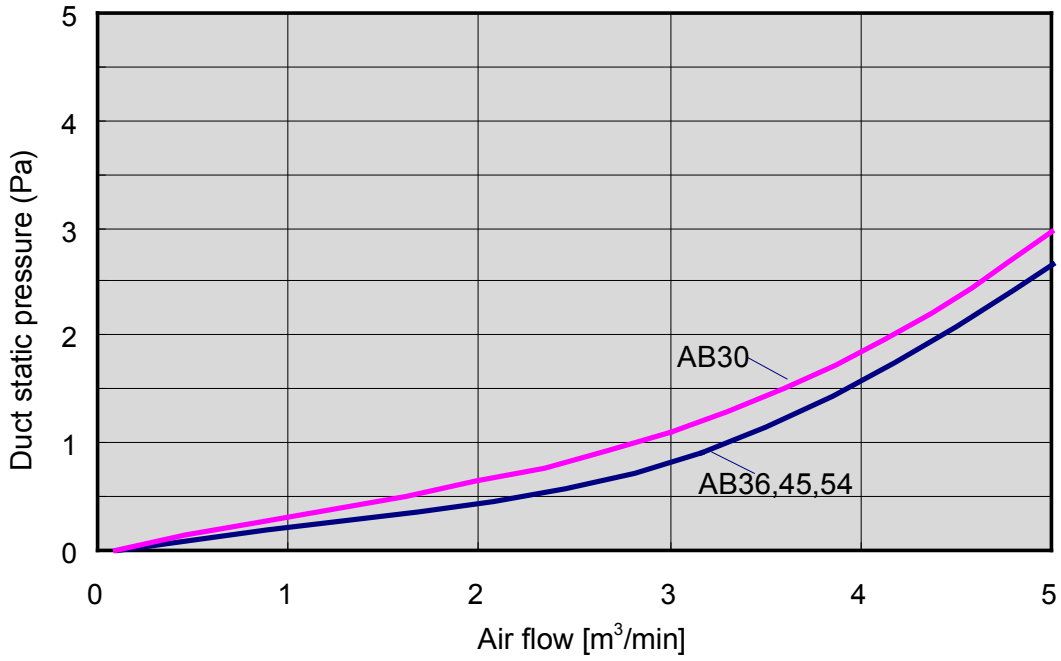

● Installation

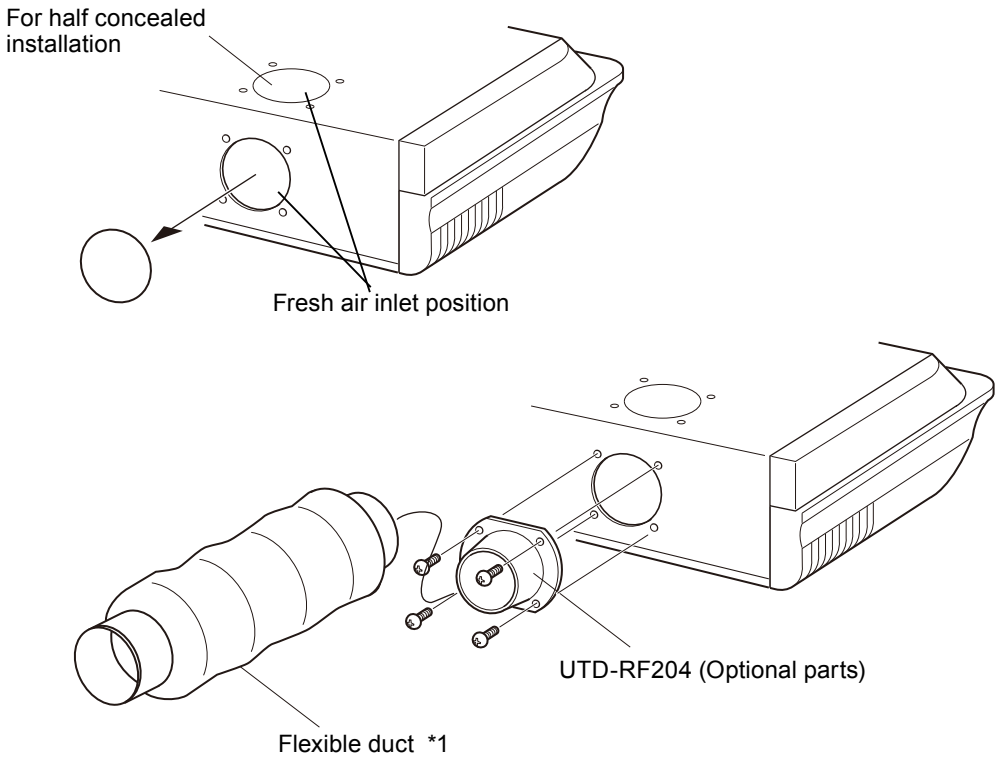

*1 : Locally procured parts

INDOOR UNITS

7-6. CASSETTE TYPE (FRESH AIR)

■ MODELS : AUXD18GALH, AUXD24GALH, AUXA30GALH, AUXA36GALH, AUXA45GALH, AUXA54GALH

● Air flow volume - Static pressure of Fresh air intake characteristics

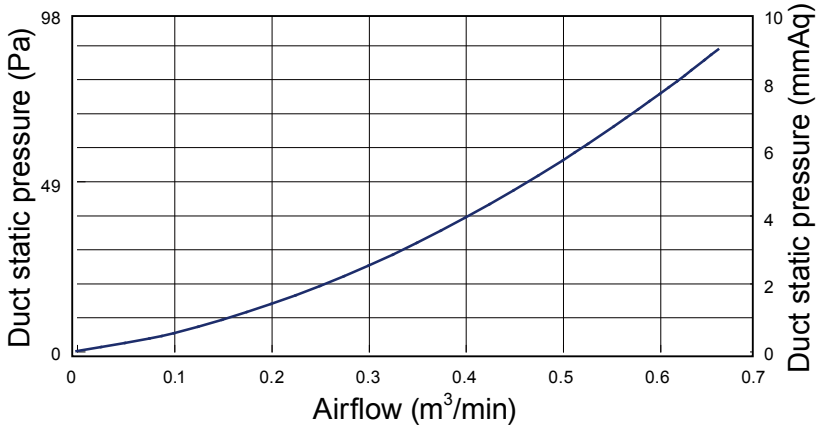

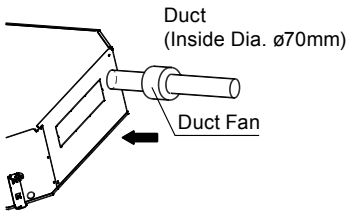

Static pressure required to take in fresh air

● Installation

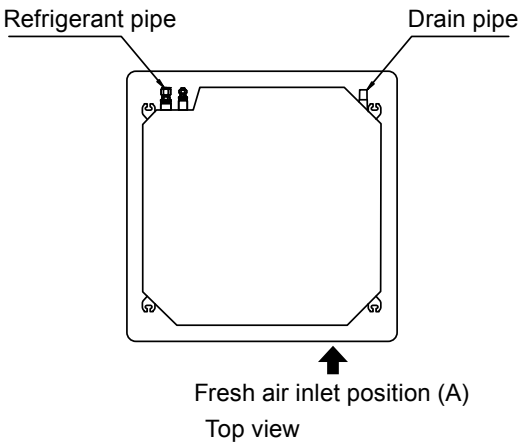

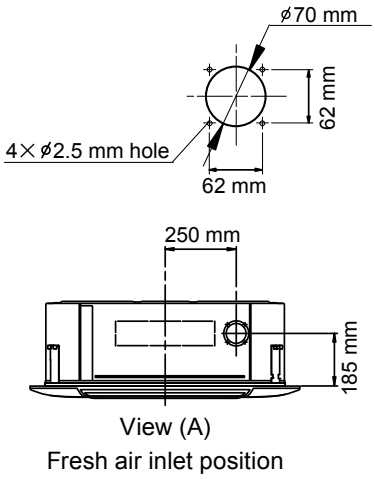

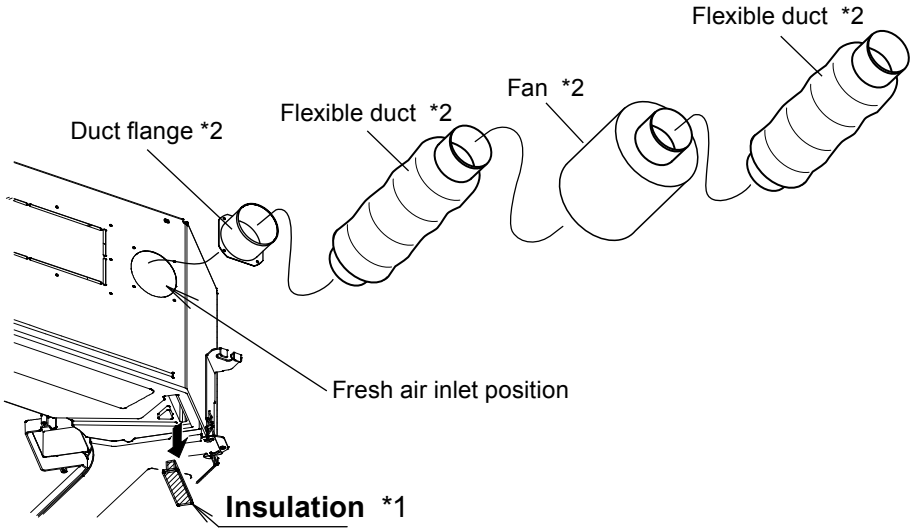

*1 : In case of fresh air intake, please remove the insulation.

*2 : Locally procured parts

8. AIRFLOW

Type	Model	Airflow			
			m^3/h	l/s	CFM
Compact Cassette	AUXB04	High	530	147	312
		Med *1	450/420	125/117	265/247
		Low *1	350/300	97/83	206/177
	AUXB07	High	540	150	318
		Med	450	125	265
		Low	350	97	206
	AUXB09	High	550	153	324
		Med	450	125	265
		Low	350	97	206
	AUXB12	High	600	167	353
		Med	530	147	312
		Low	390	108	230
	AUXB14	High	680	189	400
		Med	590	164	347
		Low	390	108	230
	AUXB18	High	710	197	418
		Med	580	161	341
		Low	400	111	235
	AUXB24	High	1030	286	606
		Med	830	231	489
		Low	450	125	265
Cassette	AUXD18	High	1150	319	677
		Med	940	261	553
		Low	870	242	512
	AUXD24	High	1280	356	753
		Med	1040	289	612
		Low	870	242	512
	AUXA30	High	1600	444	942
		Med	1300	361	765
		Low	1100	306	647
	AUXA36	High	1800	500	1059
		Med	1300	361	765
		Low	1100	306	647
	AUXA45	High	1900	528	1118
		Med	1370	381	806
		Low	1100	306	647
	AUXA54	High	2000	556	1177
		Med	1370	381	806
		Low	1100	306	647
Low Static Pressure Duct / Concealed Floor	ARXB07	High	370	103	218
		Med	310	86	182
		Low	280	78	165
	ARXB09	High	440	122	259
		Med	370	103	218
		Low	340	94	200
	ARXB12	High	590	164	347
		Med	500	139	294
		Low	450	125	265
	ARXB14	High	800	222	471
		Med	750	208	441
		Low	700	194	412
	ARXB18	High	890	247	524
		Med	810	225	477
		Low	730	203	430

*1: This value is "cooling operation / heating operation".

Conversion Factor
1 m^3/h = 0.2778 l/s = 0.5886 CFM
3.6 m^3/h = 1 l/s
1.699 m^3/h = 1 CFM

Type	Model	Airflow			
			m^3/h	l/s	CFM
Slim Duct / Slim Concealed Floor	ARXD04	High	510	142	300
		Med *1	470/400	131/111	277/235
		Low *1	440/320	122/89	259/188
	ARXD07	High	550	153	324
		Med	490	136	288
		Low	440	122	259
	ARXD09	High	600	167	353
		Med	550	153	324
		Low	480	133	283
	ARXD12	High	600	167	353
		Med	510	142	300
		Low	450	125	265
	ARXD14	High	800	222	471
		Med	710	197	418
		Low	610	169	359
	ARXD18	High	940	261	553
		Med	840	233	494
		Low	750	208	441
	ARXD24	High	1330	369	783
		Med	1240	344	730
		Low	1100	306	647
Medium Static Pressure Duct	ARXA24	High	1280	356	753
		Med	990	275	583
		Low	840	233	494
	ARXA30	High	1410	392	830
		Med	1280	356	753
		Low	1150	319	677
	ARXA36	High	1840	511	1083
		Med	1600	444	942
		Low	1470	408	865
	ARXA45	High	1970	547	1160
		Med	1860	517	1095
		Low	1640	456	965
High Static Pressure Duct	ARXC36	High	2600	722	1530
		Med	1950	542	1148
		Low	1450	403	853
	ARXC45	High	3500	972	2060
		Med	3000	833	1766
		Low	2460	683	1448
	ARXC60	High	3500	972	2060
		Med	3000	833	1766
		Low	2460	683	1448
	ARXC72	High	3900	1083	2296
		Med	3300	917	1942
		Low	3000	833	1766
	ARXC90	High	4300	1195	2531
		Med	4000	1111	2354
		Low	3500	972	2060
Floor/ Ceiling	AB∗A12	High	660	183	389
		Med	570	158	336
		Low	490	136	289
	AB∗A14	High	780	216	459
		Med	640	177	377
		Low	550	152	324
	AB∗A18	High	1000	277	589
		Med	720	199	424
		Low	580	161	342
	AB∗A24	High	1000	277	589
		Med	820	227	483
		Low	680	188	401
Ceiling	AB∗A30	High	1630	452	960
		Med	1370	379	807
		Low	1140	316	671
	AB∗A36	High	1690	469	995
		Med	1400	389	824
		Low	1170	325	689
	AB∗A45	High	2010	558	1183
		Med	1600	444	942
		Low	1230	342	724
	AB∗A54	High	2270	629	1337
		Med	1780	493	1048
		Low	1280	355	754

INDOOR UNITS

Type	Model	Airflow			
			m^3/h	l/s	CFM
Wall Mounted	AS∗A04	High	450	125	265
		Med *1	440/370	122/103	259/218
		Low *1	420/320	117/89	247/188
	AS∗A07	High	490	136	288
		Med	450	125	265
		Low *1	420/370	117/103	247/218
	AS∗A09	High	500	139	294
		Med	450	125	265
		Low *1	420/370	117/103	247/218
	AS∗A12	High	560	156	330
		Med	480	133	283
		Low	420	117	247
	AS∗A14	High	670	186	394
		Med	490	136	288
		Low	420	117	247
Wall Mounted (EEV external model)	AS∗E04	High	450	125	265
		Med *1	440/370	122/103	259/218
		Low *1	420/300	117/83	247/177
	AS∗E07	High	490	136	288
		Med	450	125	265
		Low *1	420/370	117/103	247/218
	AS∗E09	High	500	139	294
		Med	450	125	265
		Low *1	420/370	117/103	247/218
	AS∗E12	High	560	156	330
		Med	480	133	283
		Low	420	117	247
	AS∗E14	High	680	189	400
		Med	490	136	288
		Low	420	117	247
Wall Mounted	AS∗A18	High	840	233	495
		Med	770	213	454
		Low	690	191	406
	AS∗A24	High	1100	305	648
		Med	910	252	536
		Low	730	202	430
	AS∗A30	High	1240	343	730
		Med	980	271	577
		Low	770	213	454

*1: This value is "cooling operation / heating operation".

Conversion Factor
1 m^3/h = 0.2778 l/s = 0.5886 CFM
3.6 m^3/h = 1 l/s
1.699 m^3/h = 1 CFM

INDOOR UNITS

9. NOISE LEVEL CURVE

9-1. COMPACT CASSETTE TYPE

■ MODEL : AUXB04GALH

● COOLING

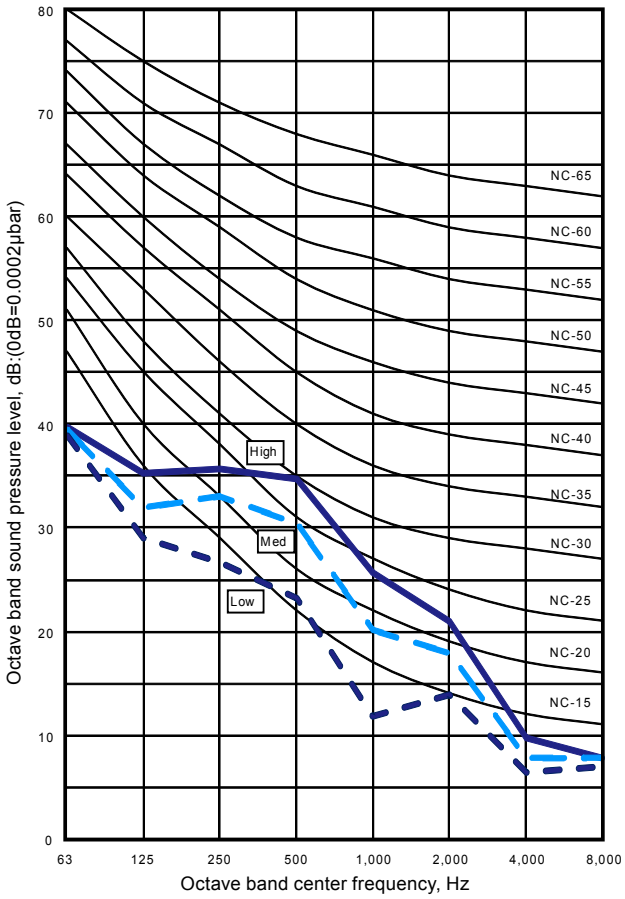

●HEATING

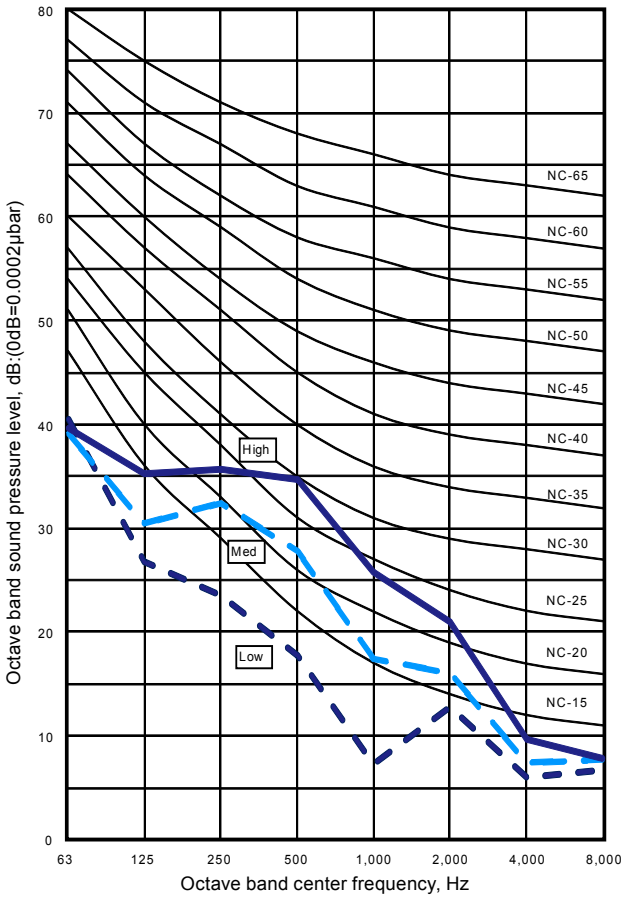

■ MODEL : AUXB07GALH

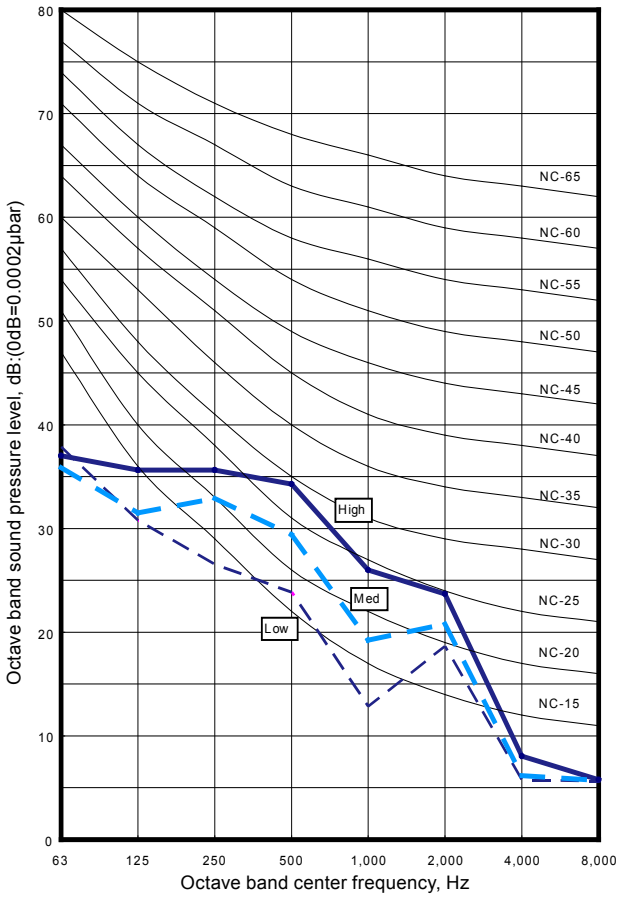

■ MODEL : AUXB09GALH

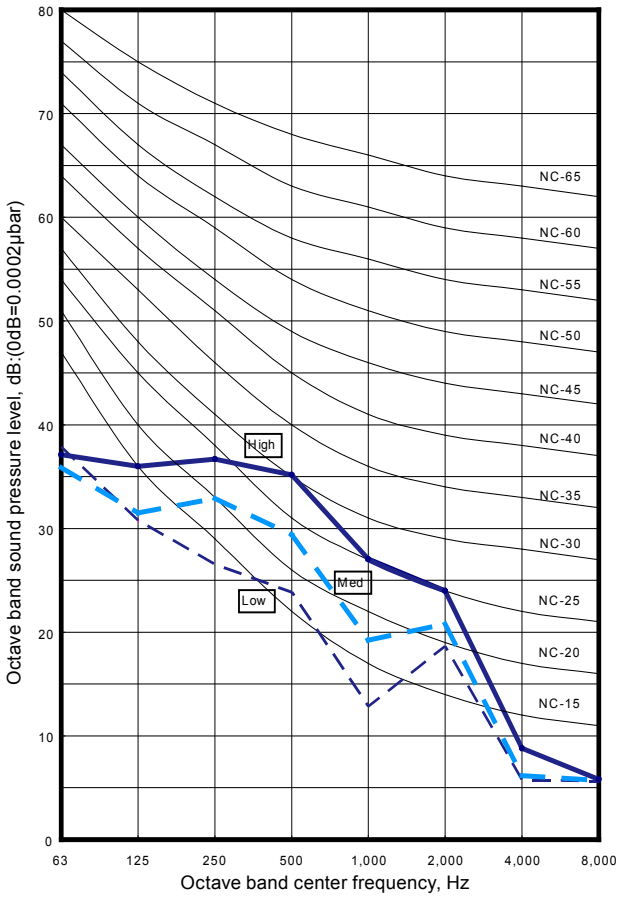

INDOOR UNITS

■ MODEL : AUXB12GALH

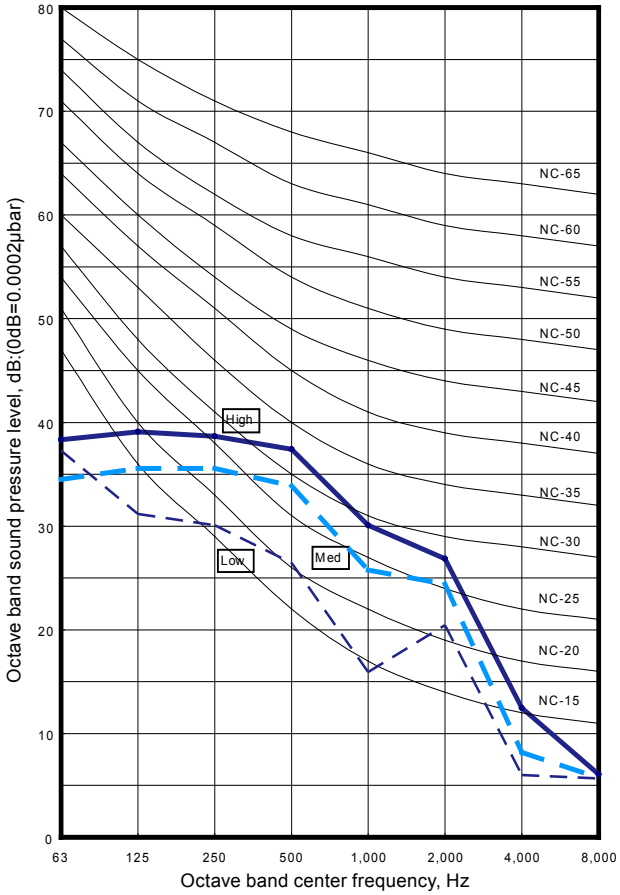

■ MODEL : AUXB14GALH

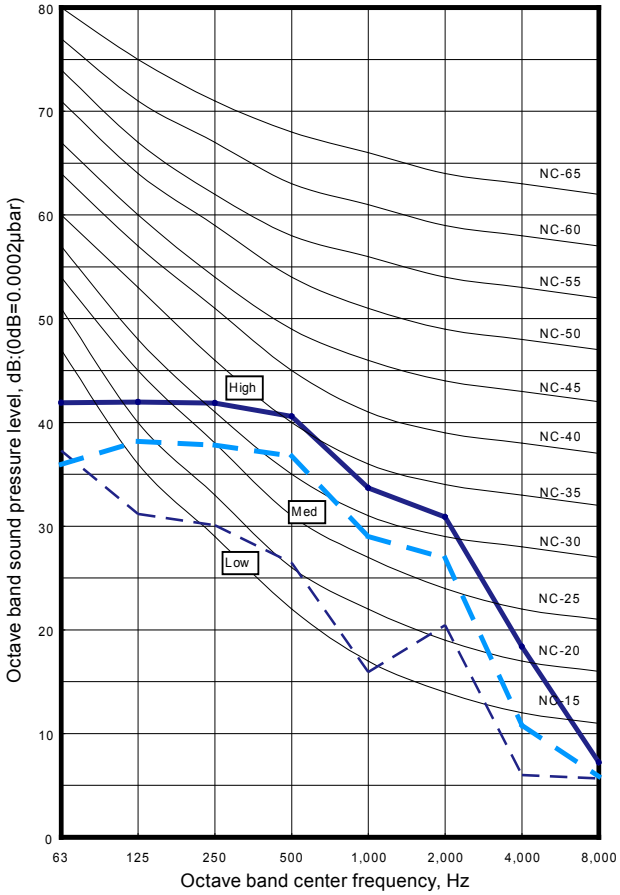

■ MODEL : AUXB18GALH

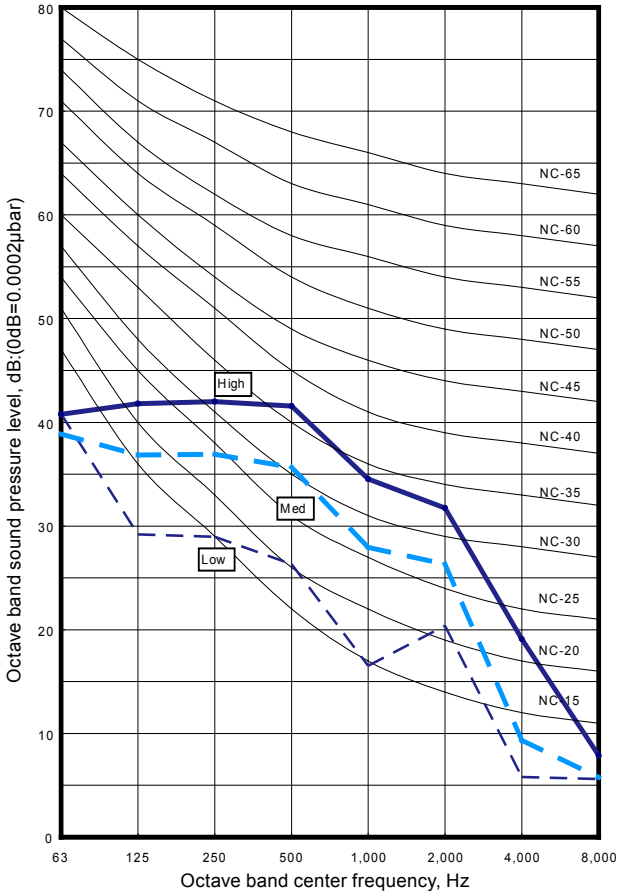

■ MODEL : AUXB24GALH

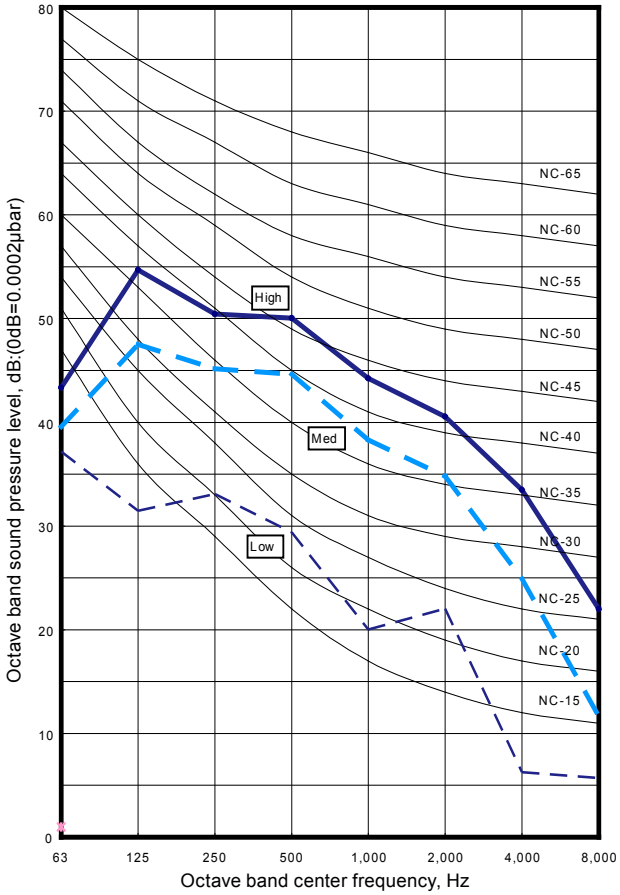

INDOOR UNITS

9-2. CASSETTE TYPE

■ MODEL : AUXD18GALH

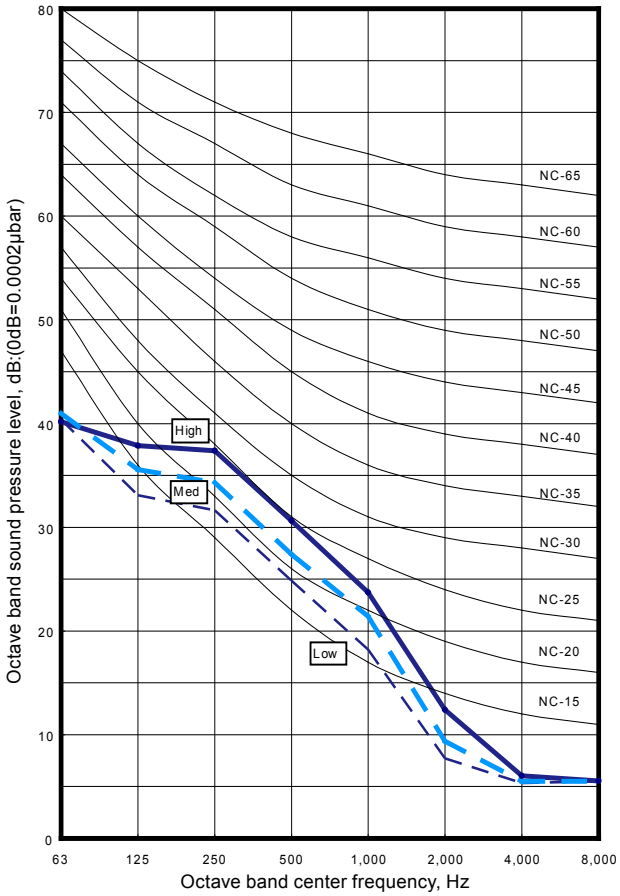

■ MODEL : AUXD24GALH

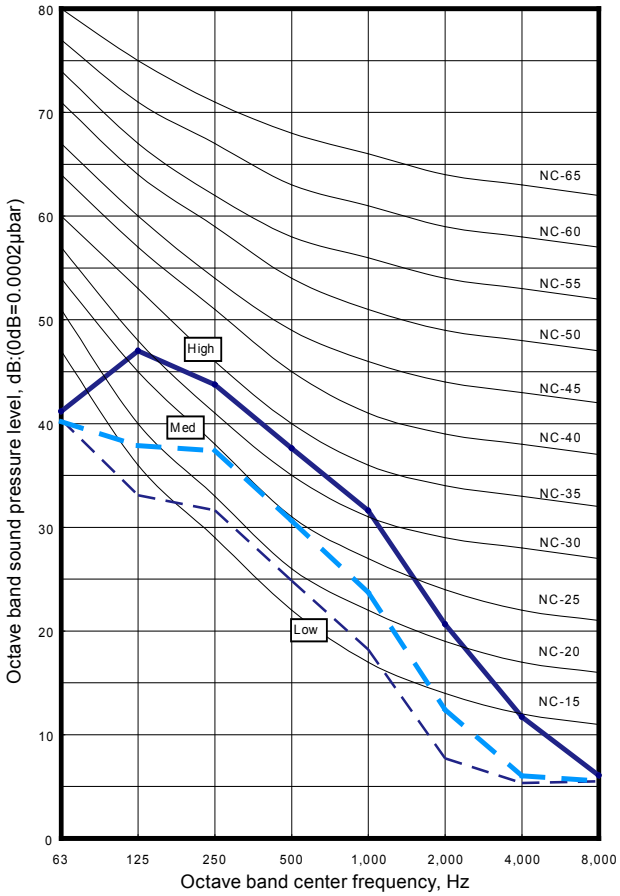

INDOOR UNITS

■ MODEL : AUXA30GALH

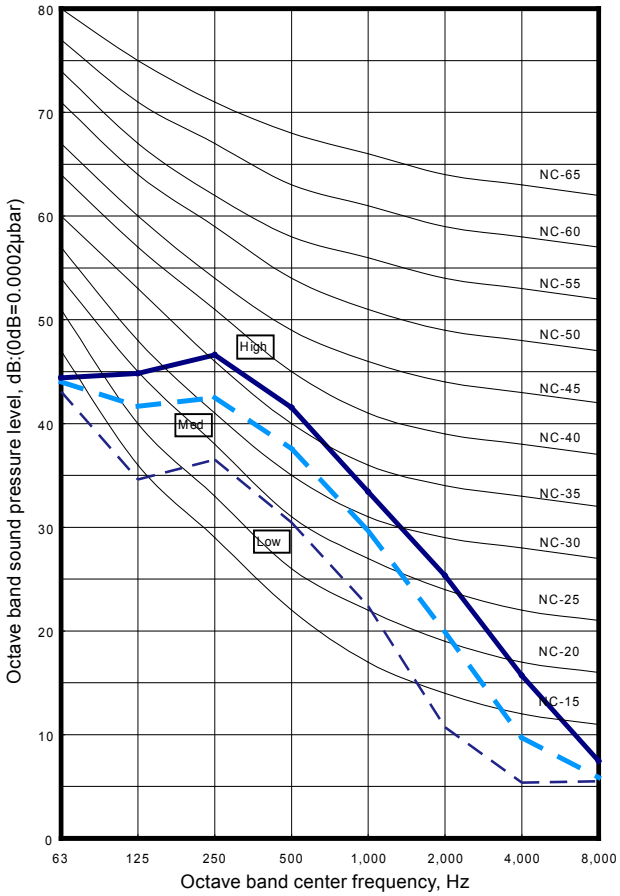

■ MODEL : AUXA36GALH

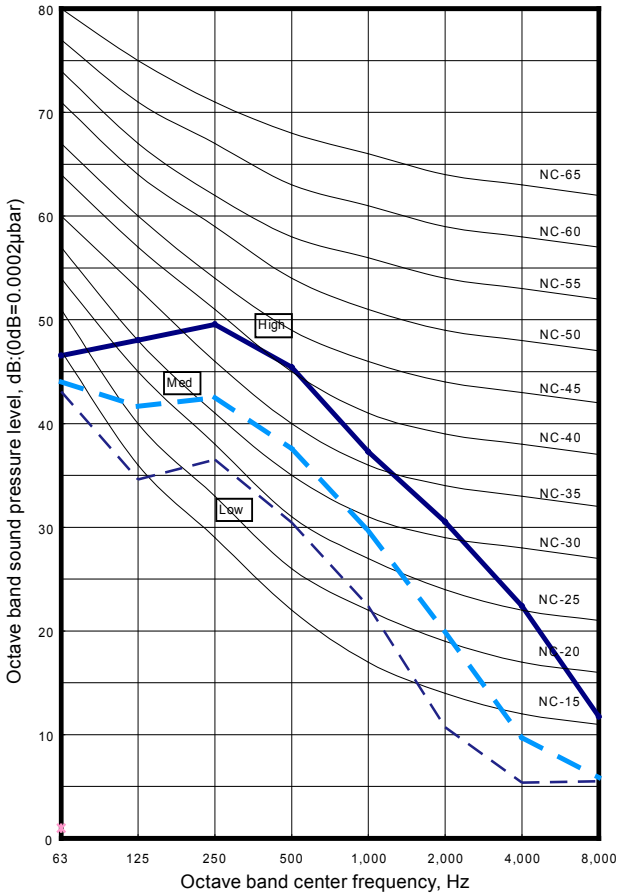

■ MODEL : AUXA45GALH

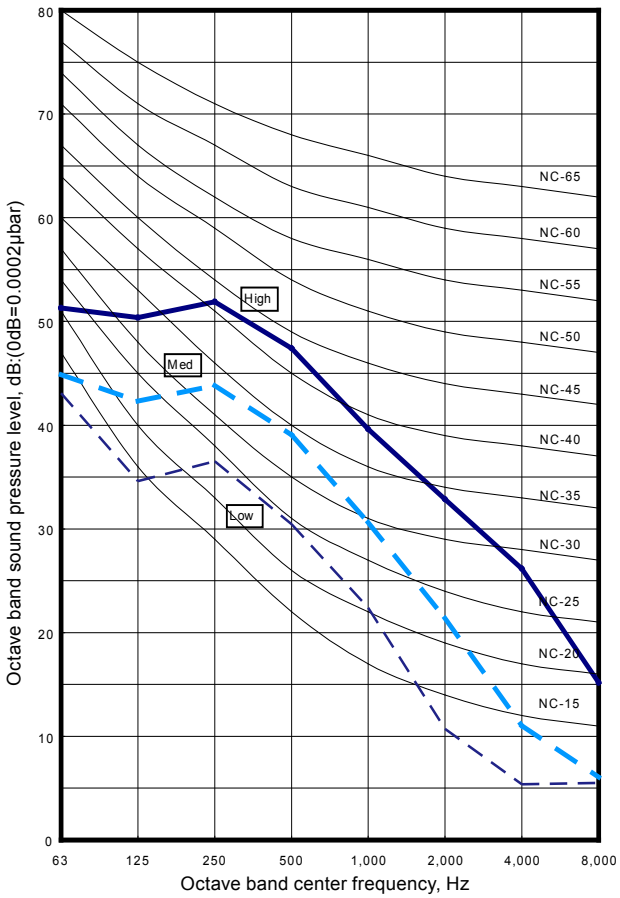

■ MODEL : AUXA54GALH

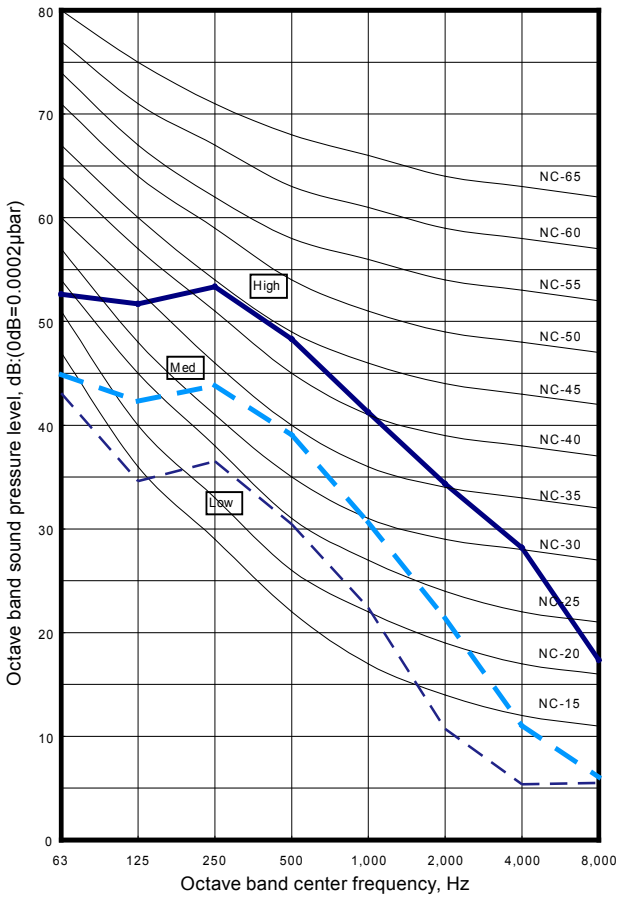

INDOOR UNITS

9-3. LOW STATIC PRESSURE DUCT / CONCEALED FLOOR TYPE

■ MODEL : ARXB07GALH

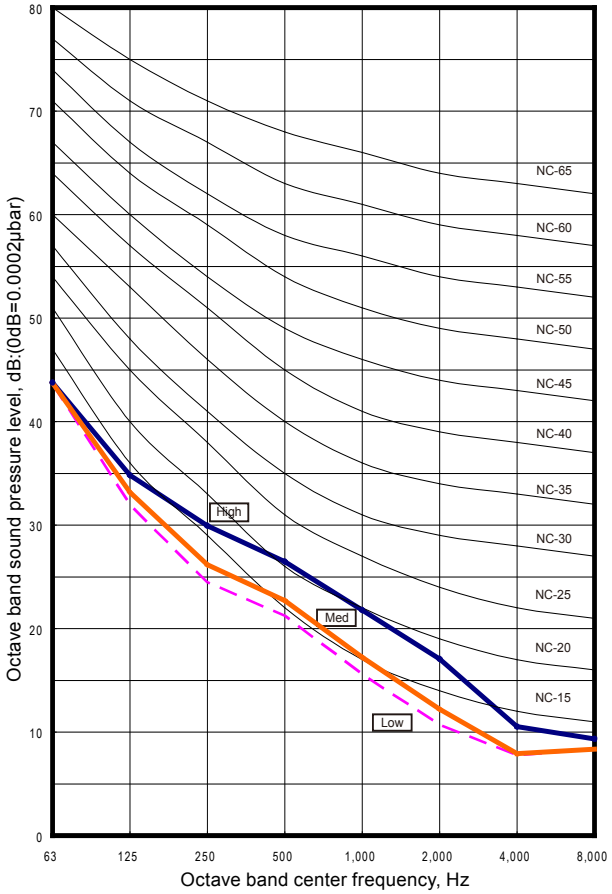

■ MODEL : ARXB09GALH

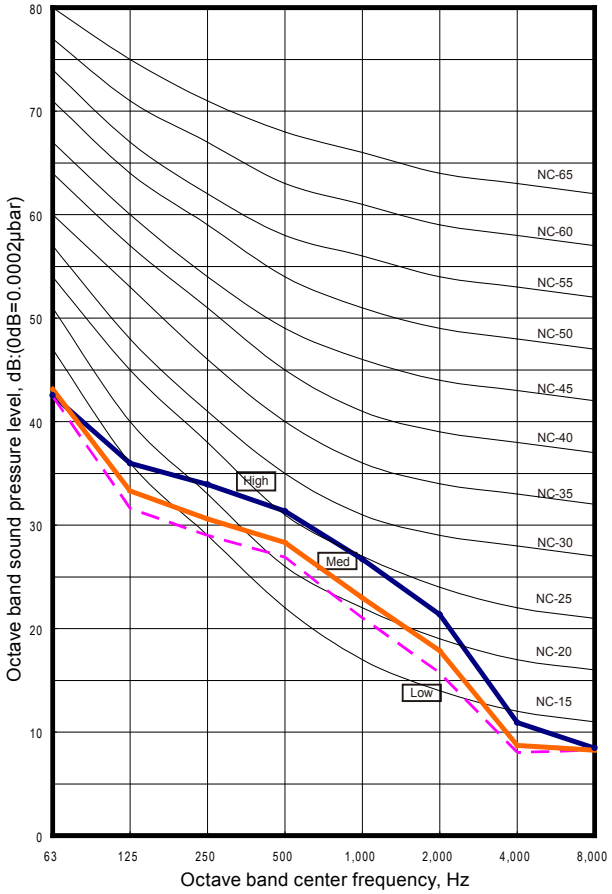

INDOOR UNITS

■ MODEL : ARXB12GALH

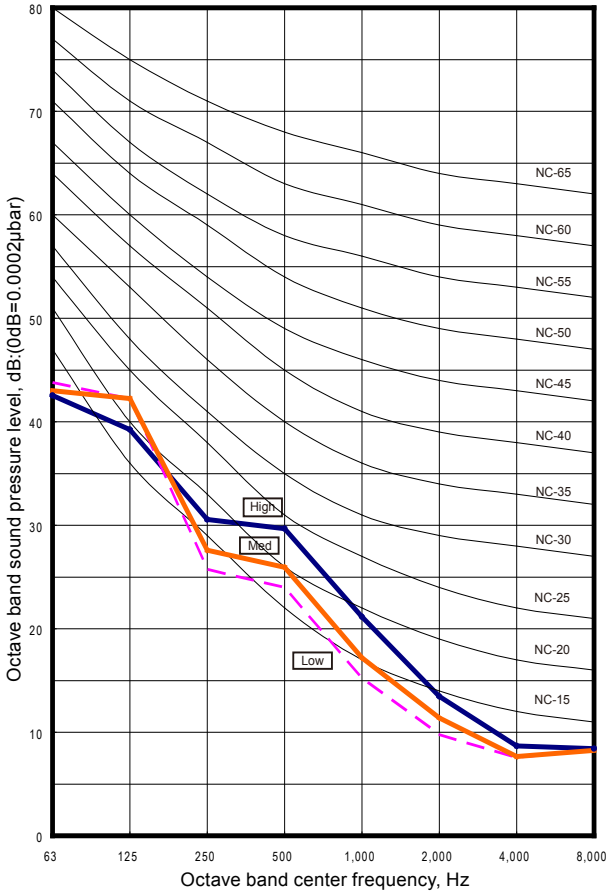

■ MODEL : ARXB14GALH

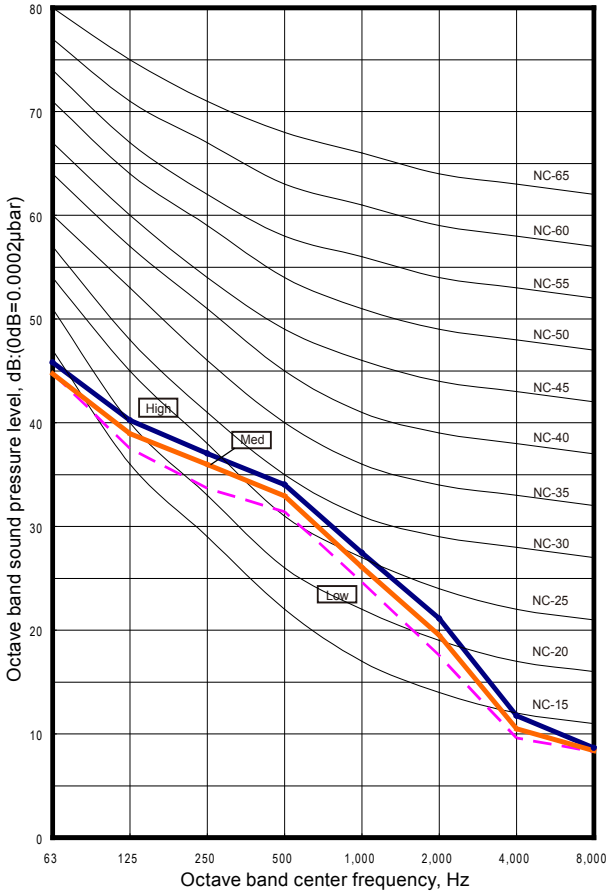

■ MODEL : ARXB18GALH

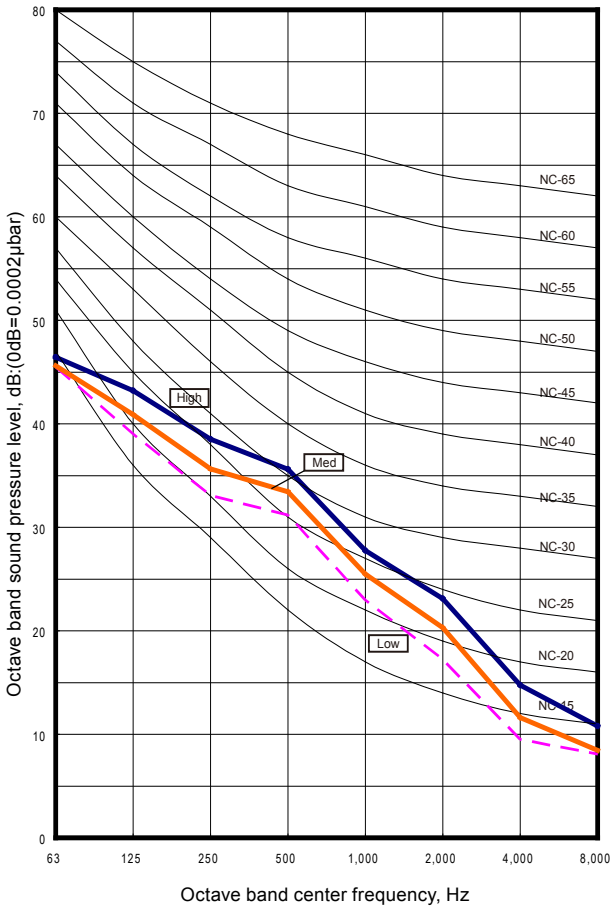

INDOOR UNITS

9-4. SLIM DUCT / SLIM CONCEALED FLOOR TYPE

■ MODEL : ARXD04GALH

● COOLING

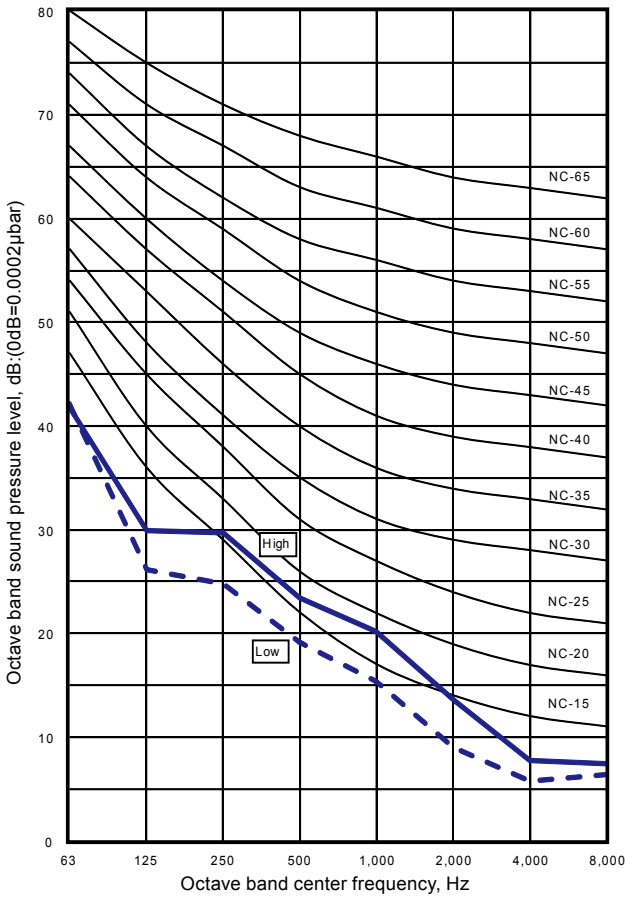

●HEATING

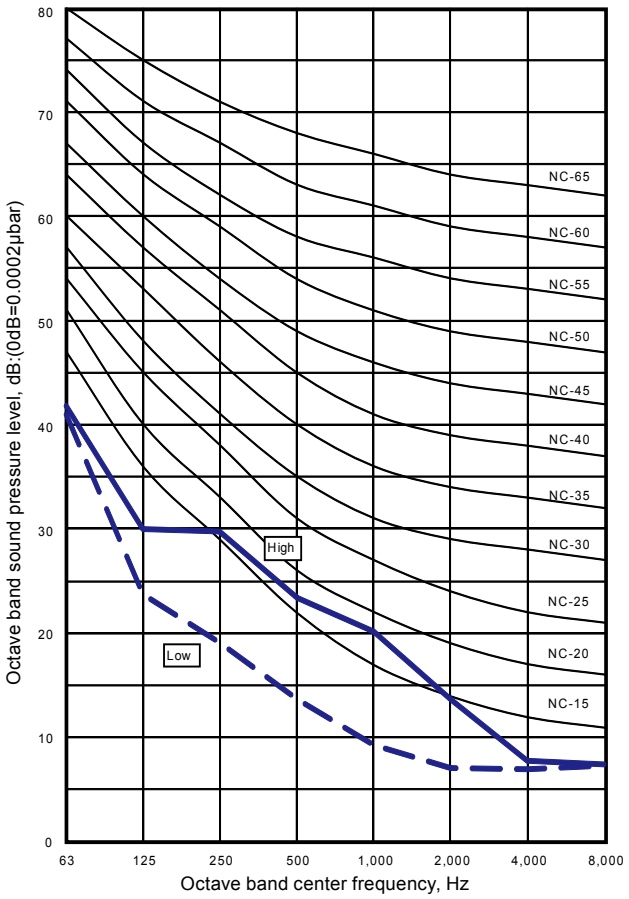

■ MODEL : ARXD07GALH

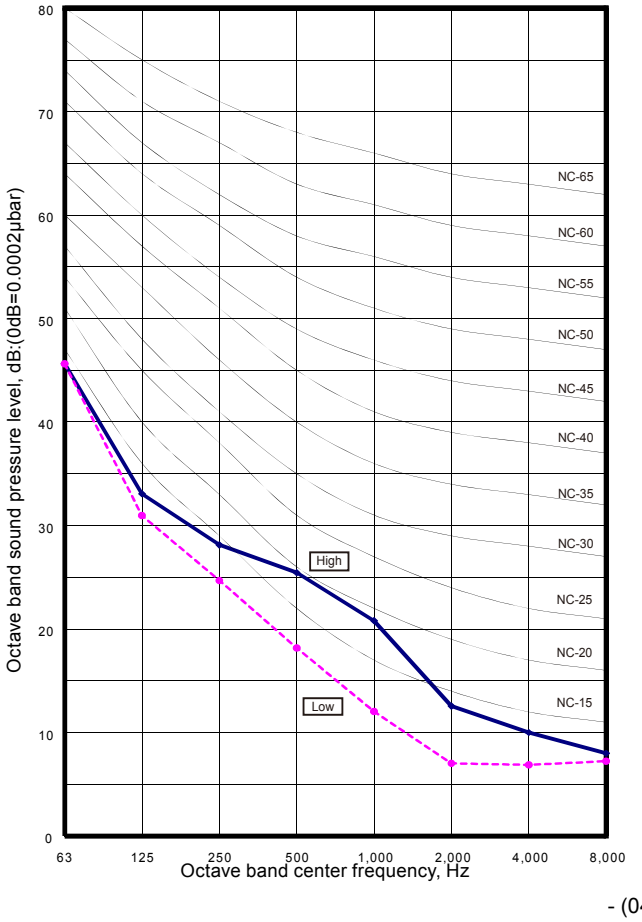

■ MODEL : ARXD09GALH

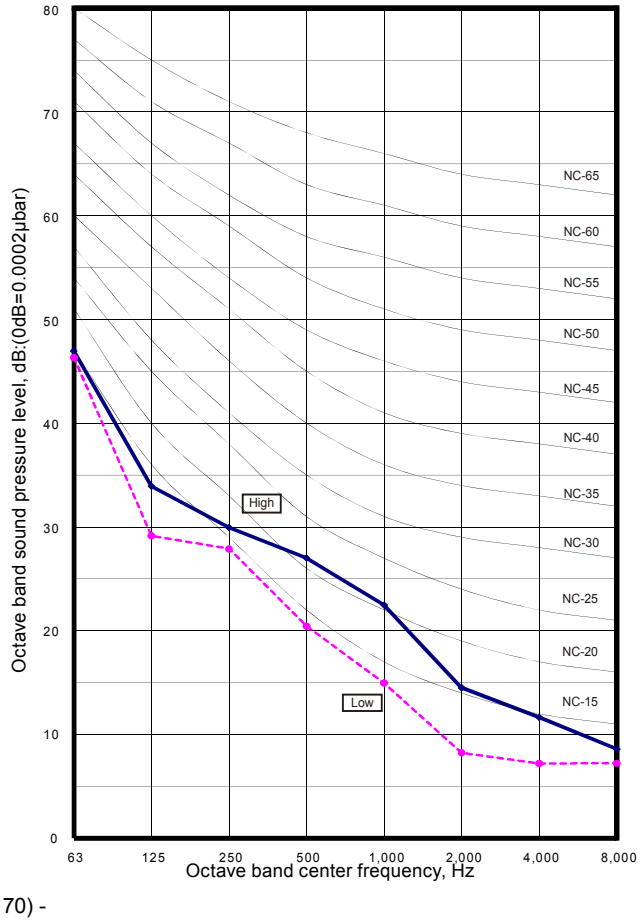

INDOOR UNITS

■ MODEL : ARXD12GALH

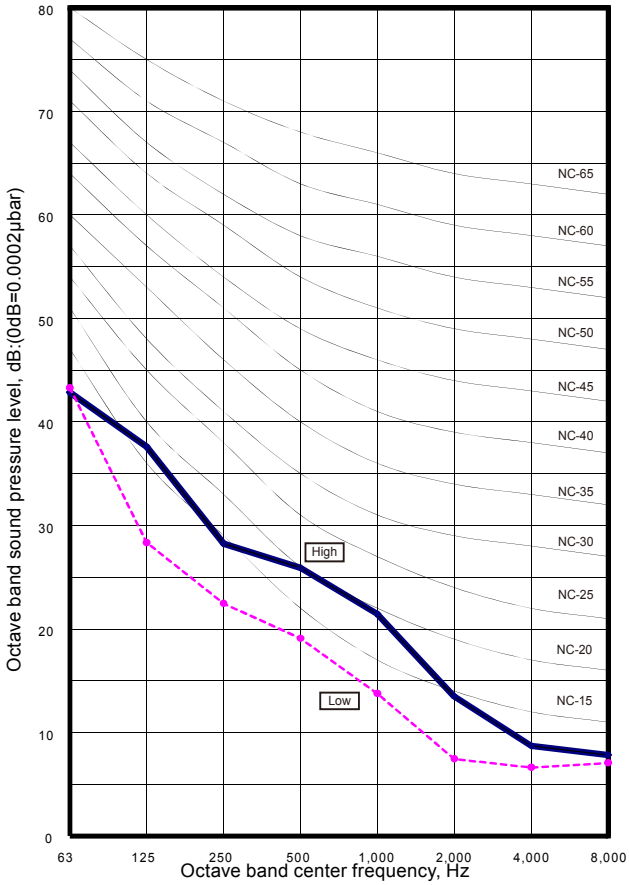

■ MODEL : ARXD14GALH

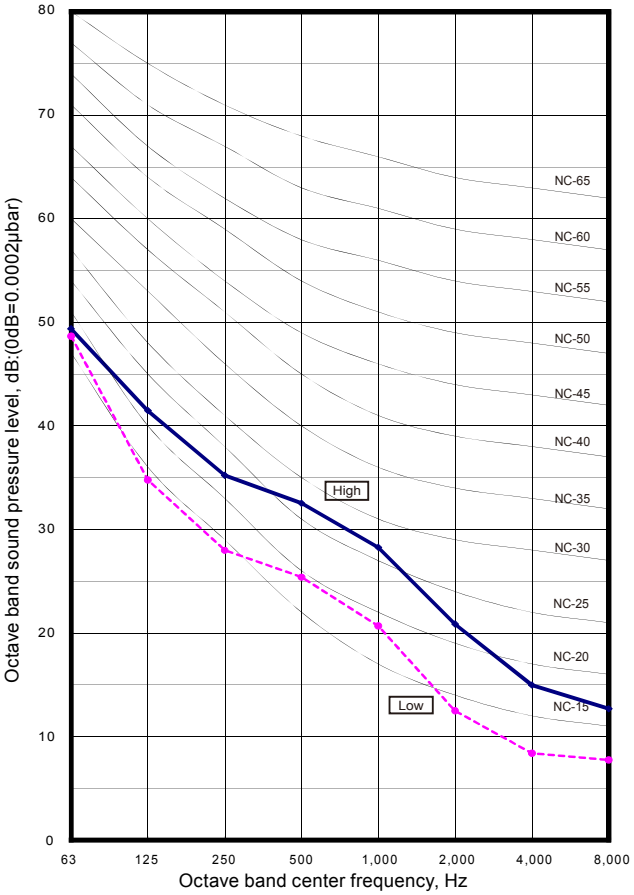

■ MODEL : ARXD18GALH

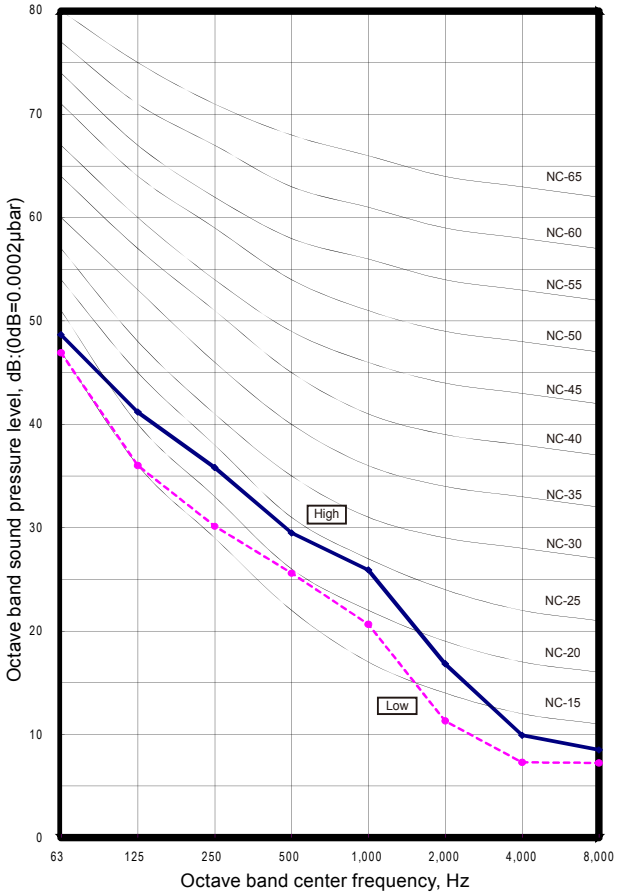

■ MODEL : ARXD24GALH

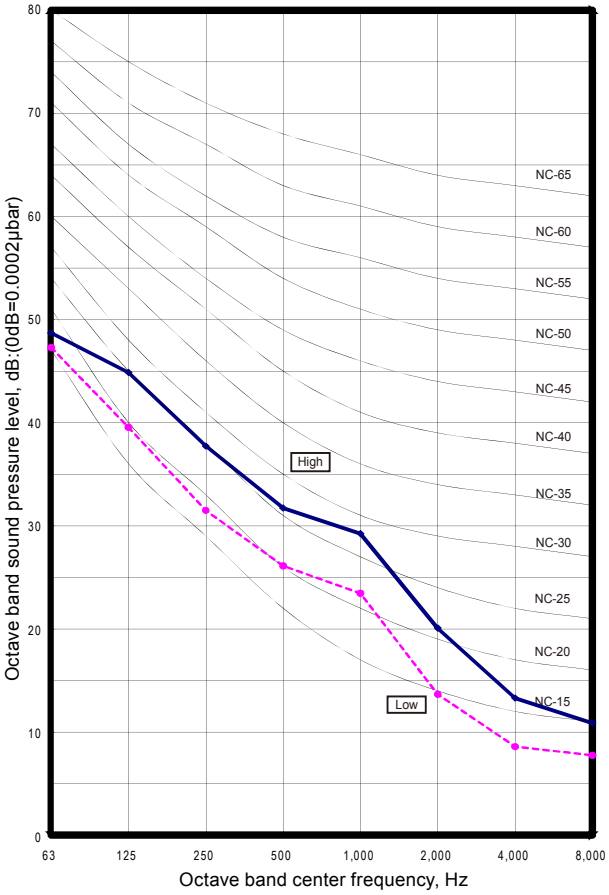

INDOOR UNITS

9-5. MEDIUM STATIC PRESSURE DUCT TYPE

■ MODEL : ARXA24GBLH

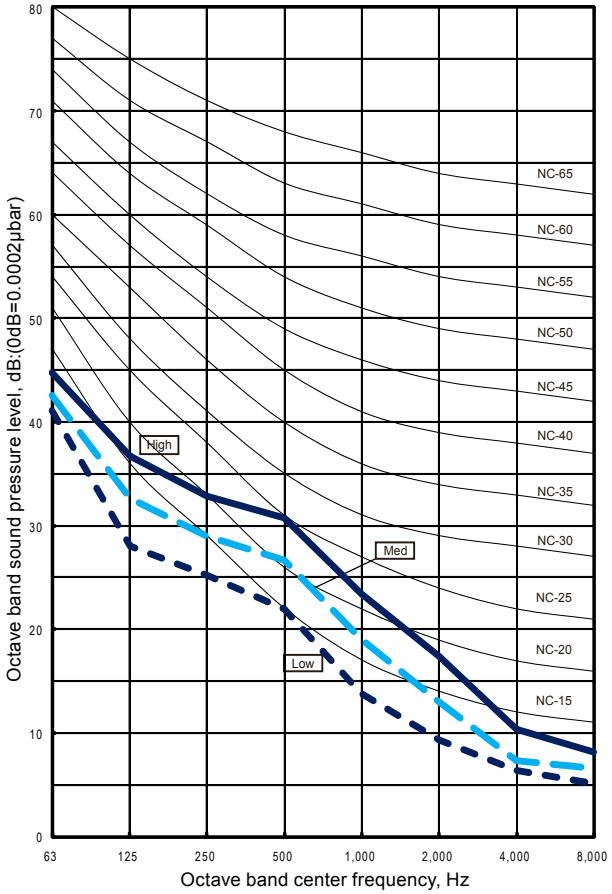

■ MODEL : ARXA30GBLH

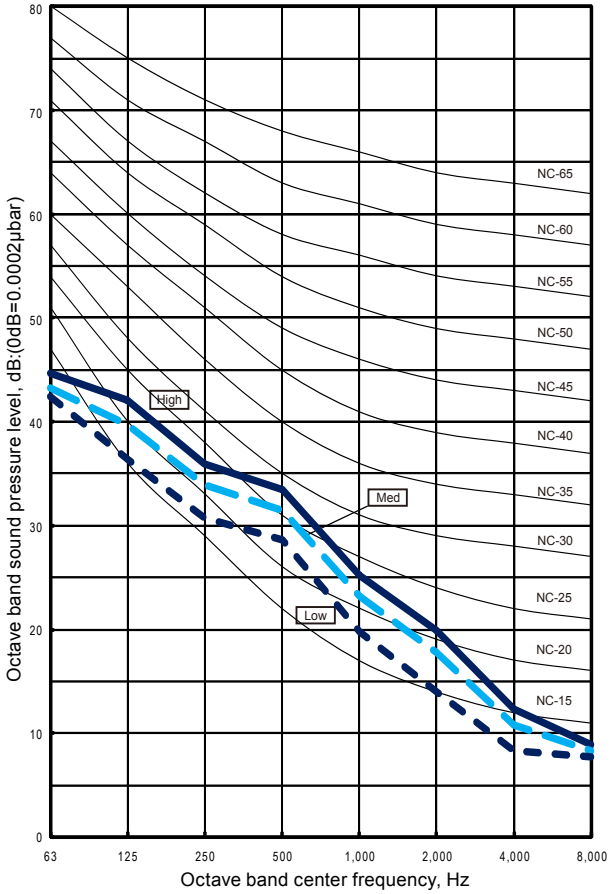

■ MODEL : ARXA36GBLH

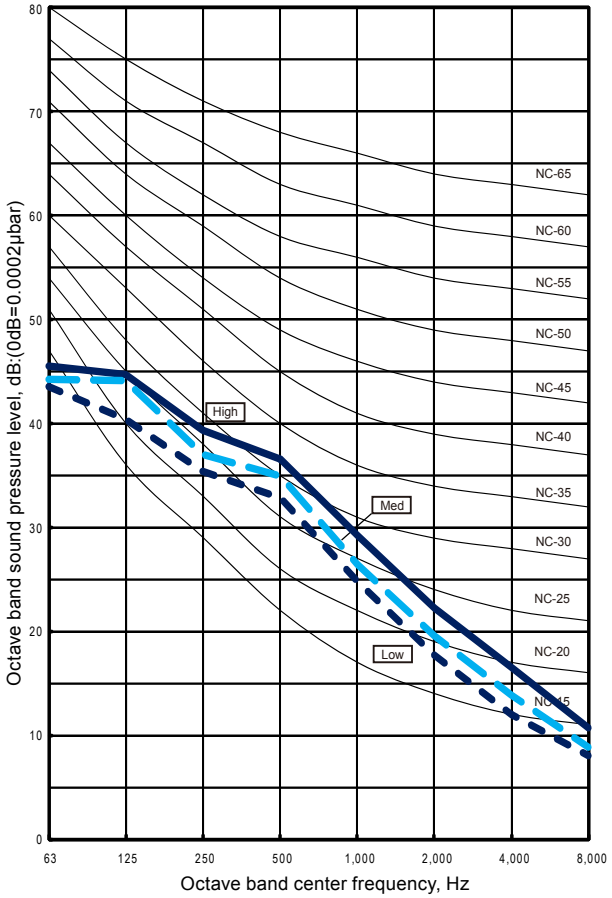

■ MODEL : ARXA45GBLH

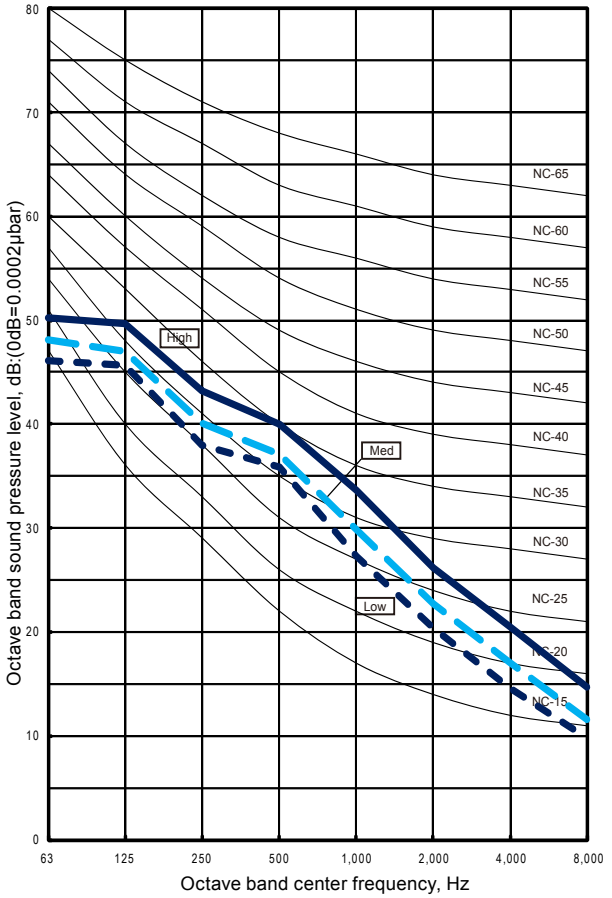

INDOOR UNITS

9-6. HIGH STATIC PRESSURE DUCT TYPE

■ MODEL : ARXC36GATH

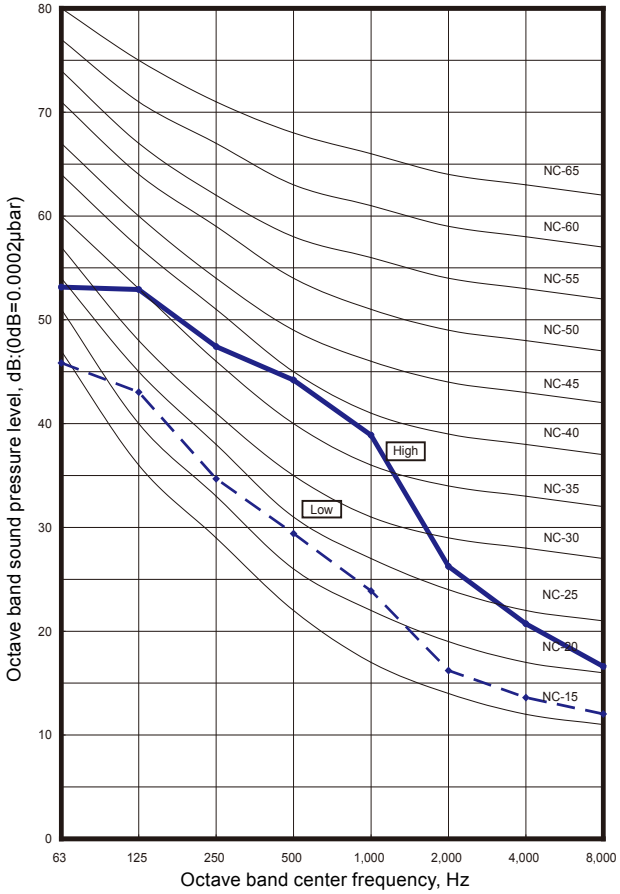

■ MODEL : ARXC45GATH

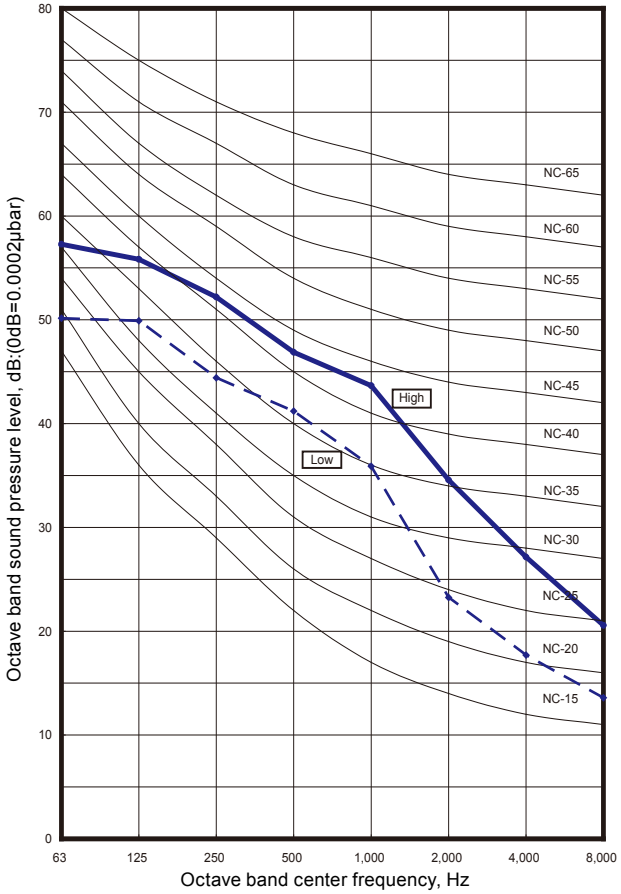

■ MODEL : ARXC60GATH

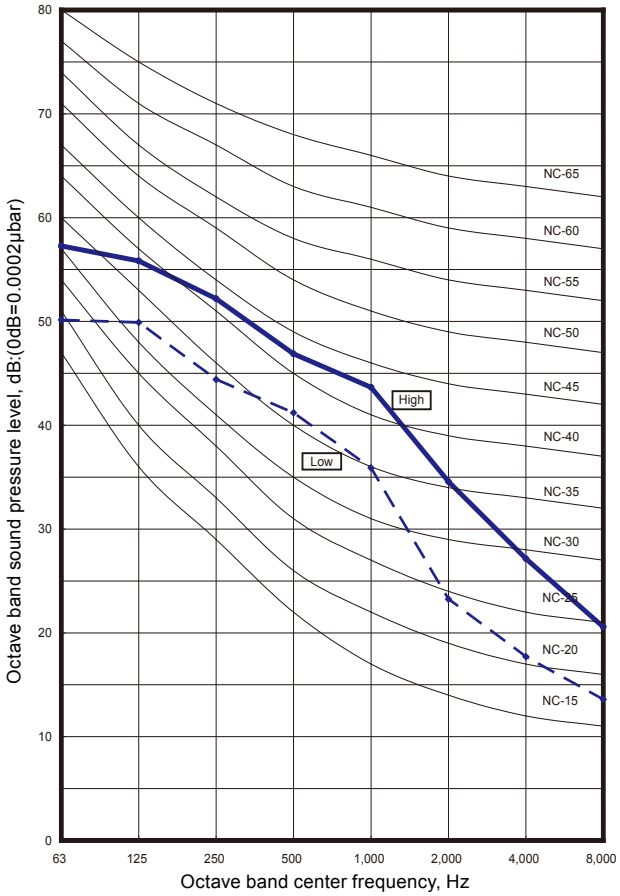

INDOOR UNITS

■ MODEL : ARXC72GATH

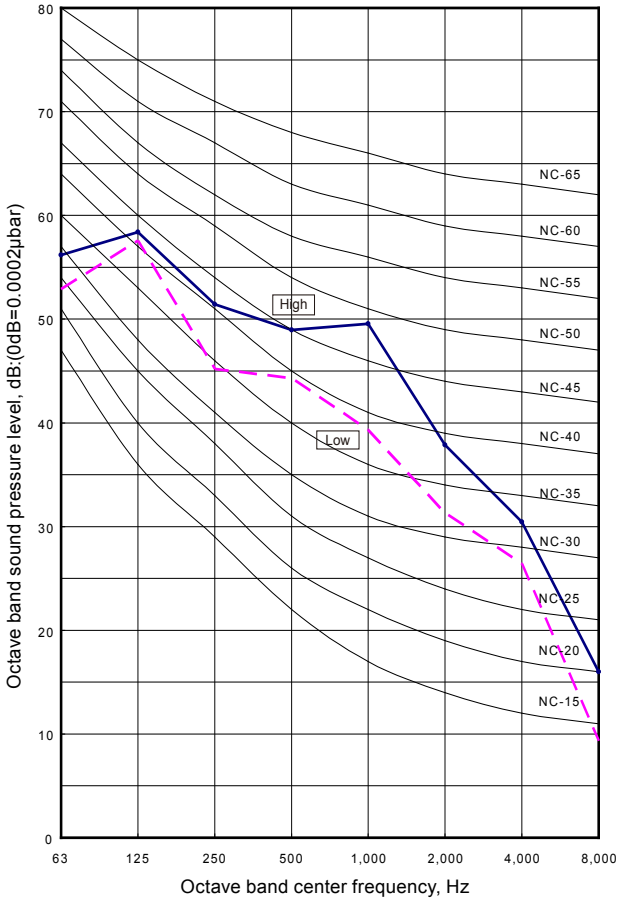

■ MODEL : ARXC90GATH

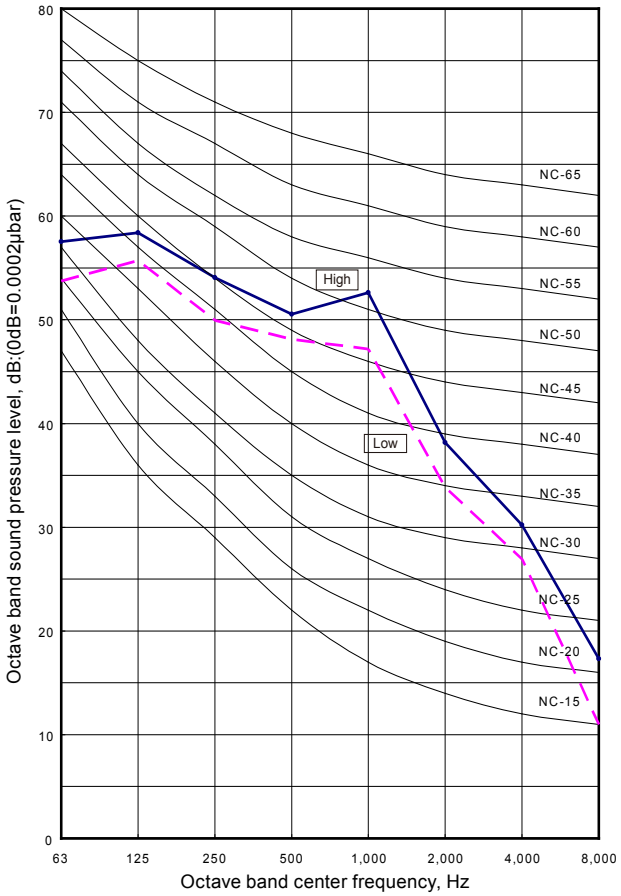

INDOOR UNITS

9-7. FLOOR / CEILING TYPE

■ MODEL : AB∗A12GATH

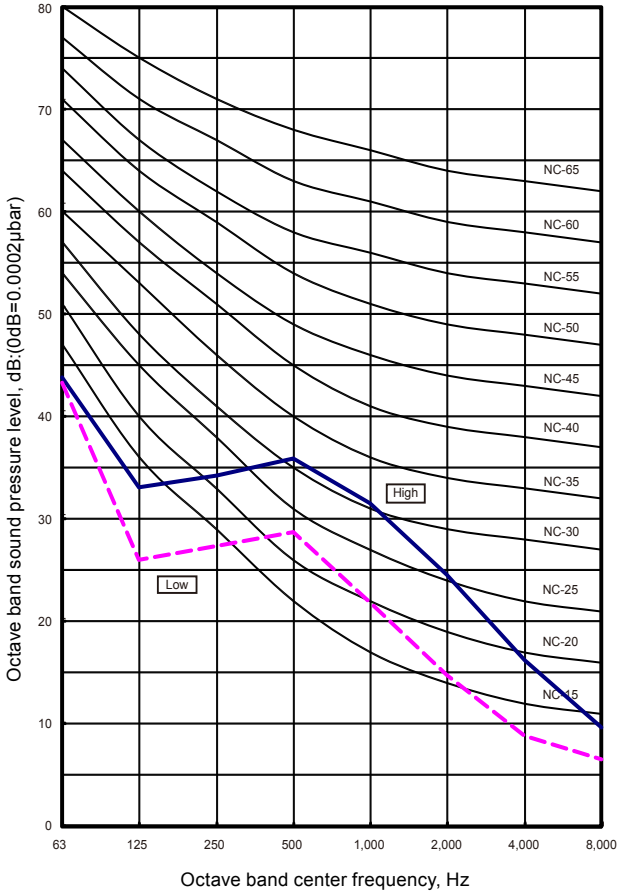

■ MODEL : AB∗A14GATH

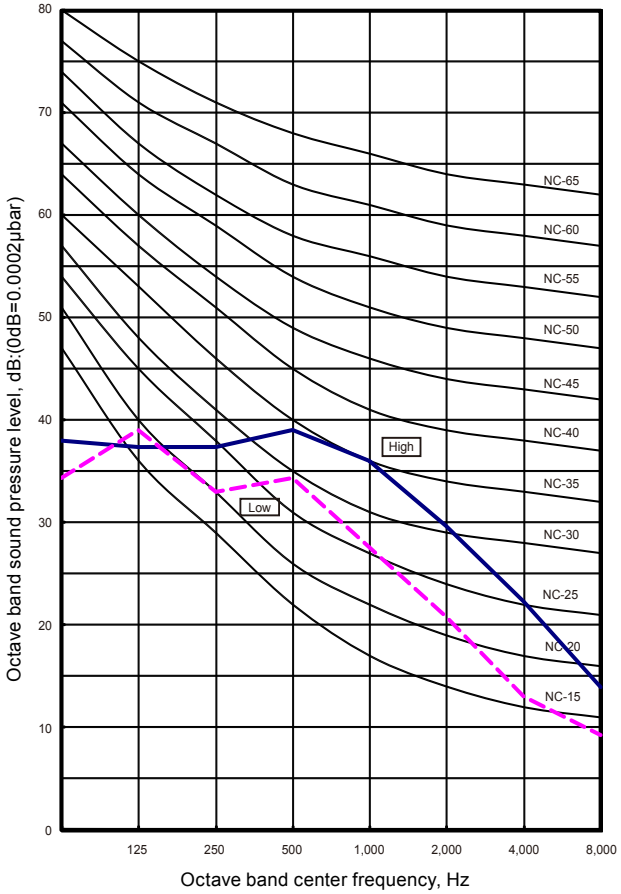

■ MODEL : AB∗A18GATH

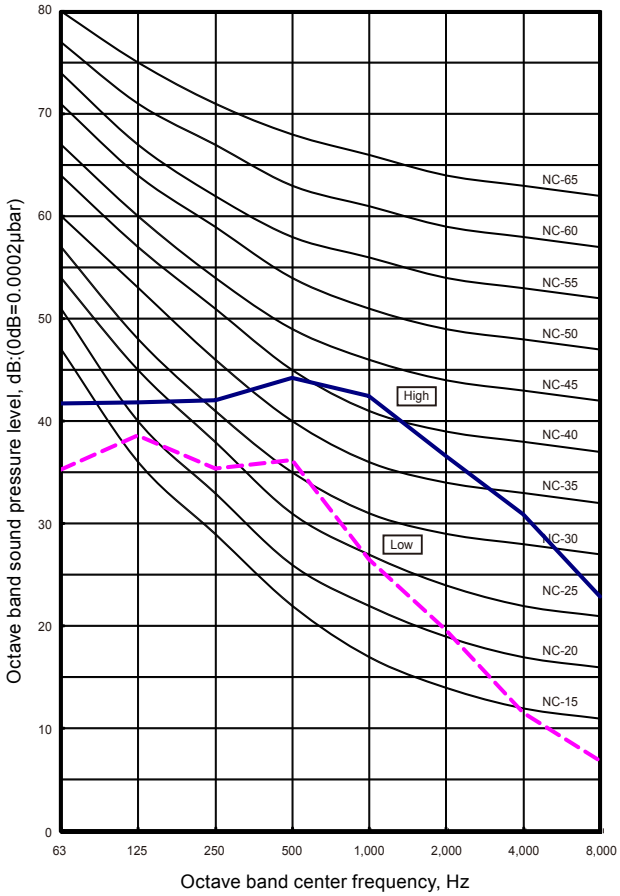

■ MODEL : AB∗A24GATH

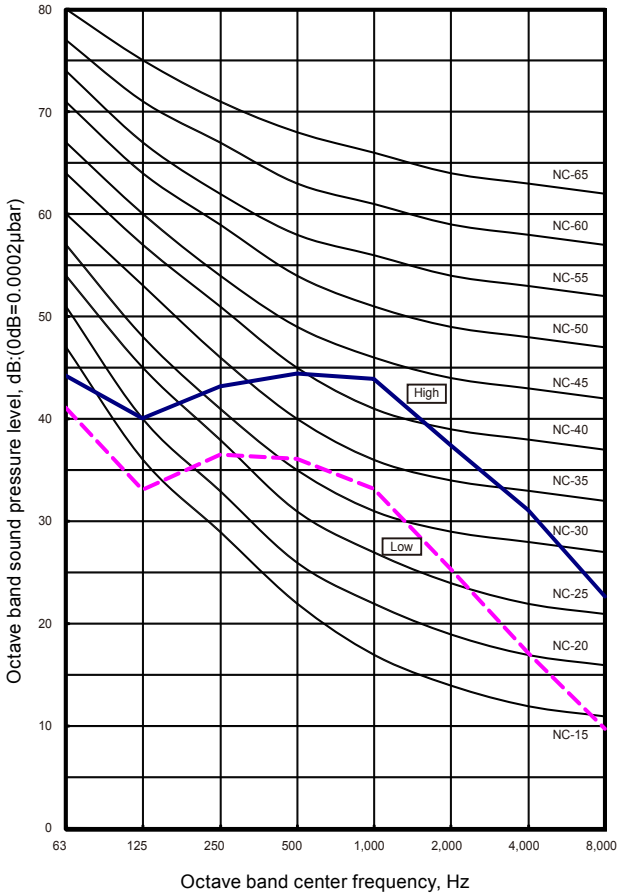

INDOOR UNITS

9-8. CEILING TYPE

■ MODEL : AB∗A30GATH

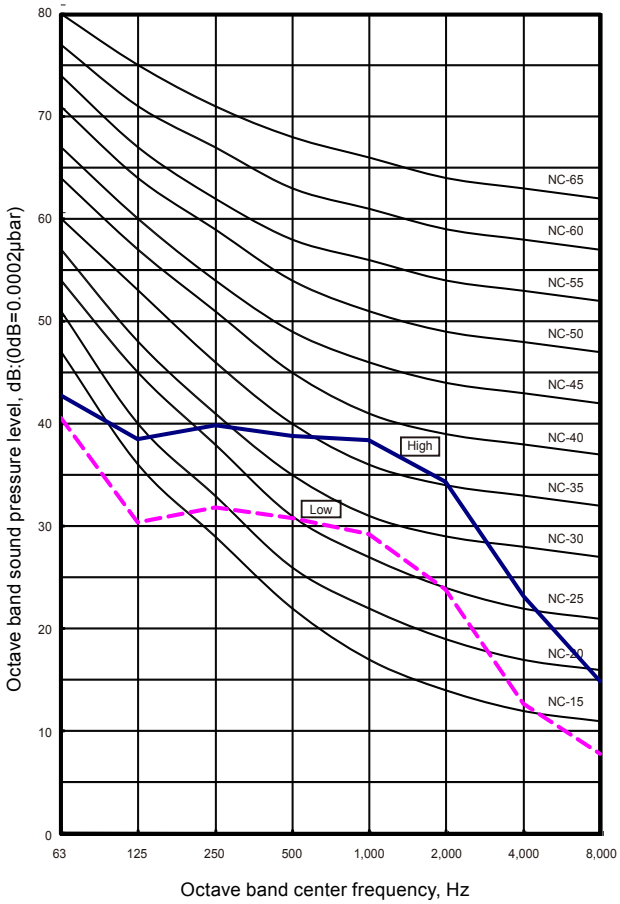

■ MODEL : AB∗A36GATH

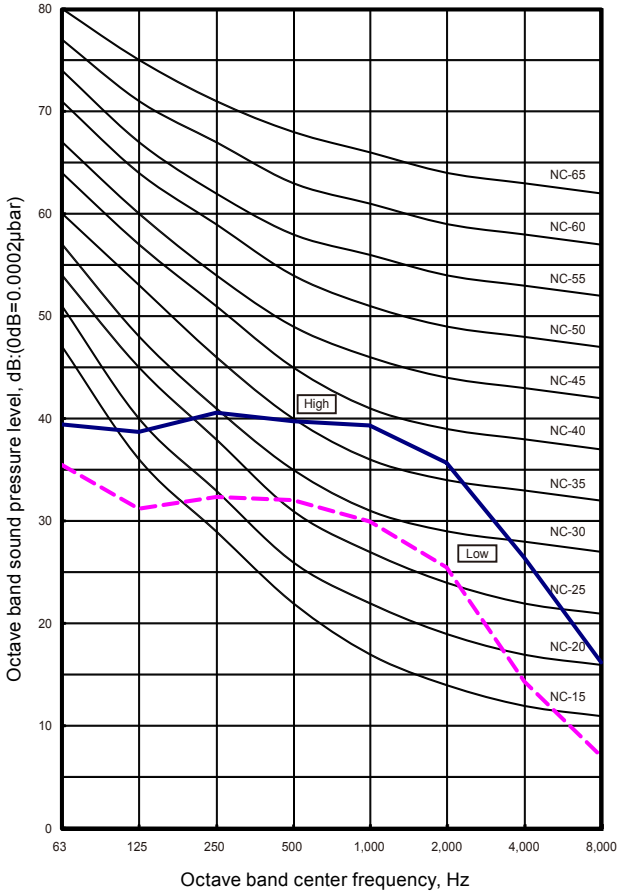

■ MODEL : AB∗A45GATH

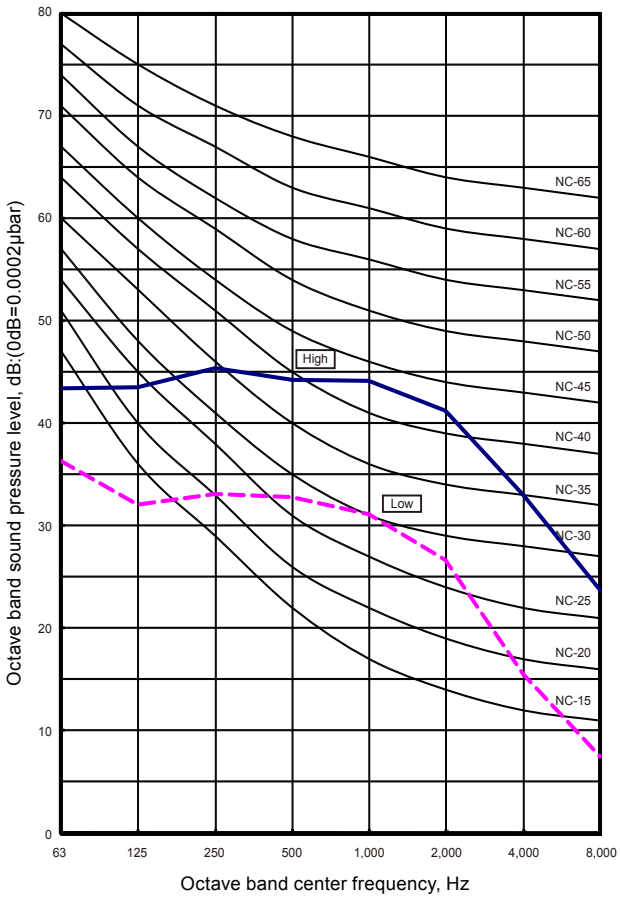

■ MODEL : AB∗A54GATH

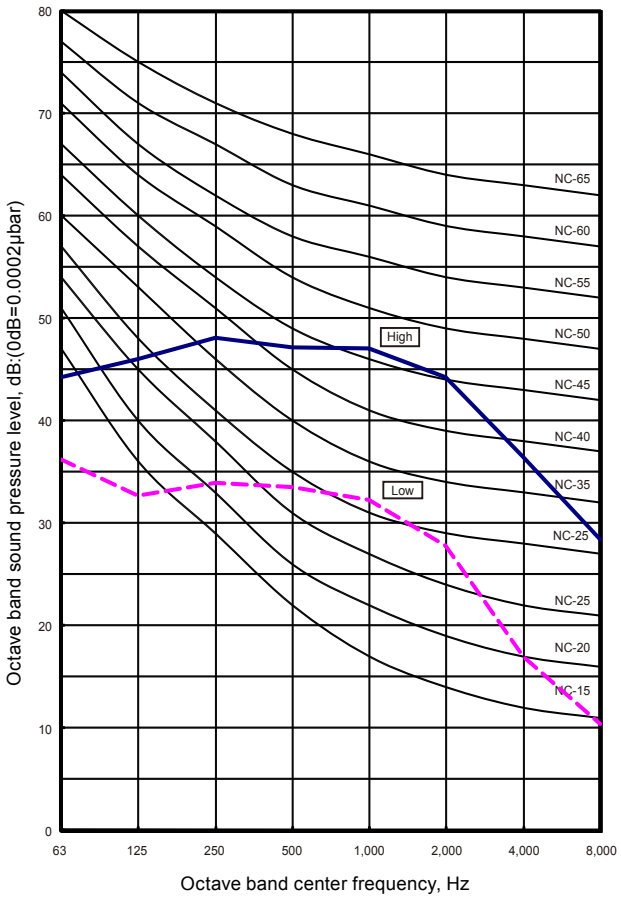

INDOOR UNITS

9-9. WALL MOUNTED TYPE

■ MODEL : AS∗A04GACH

● COOLING

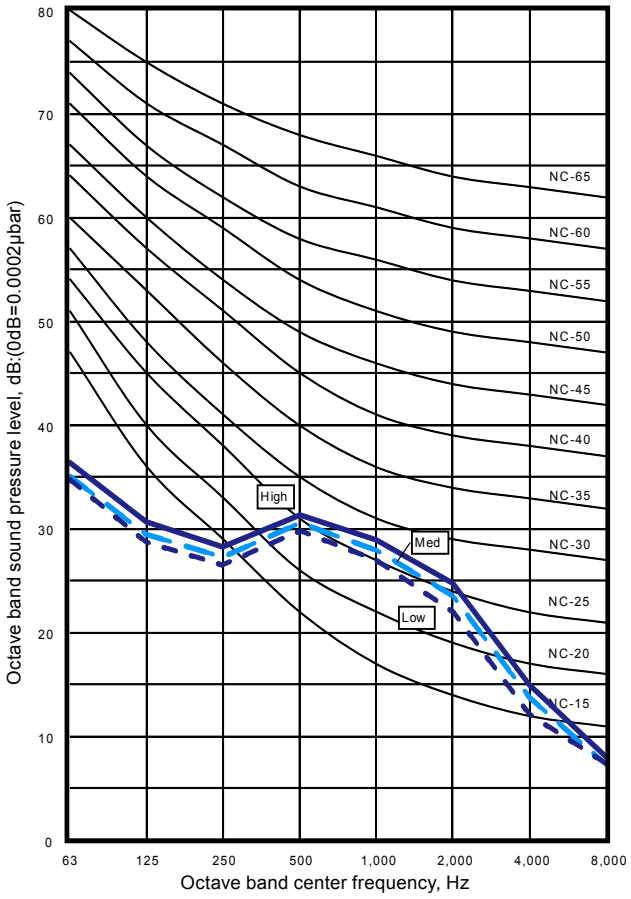

●HEATING

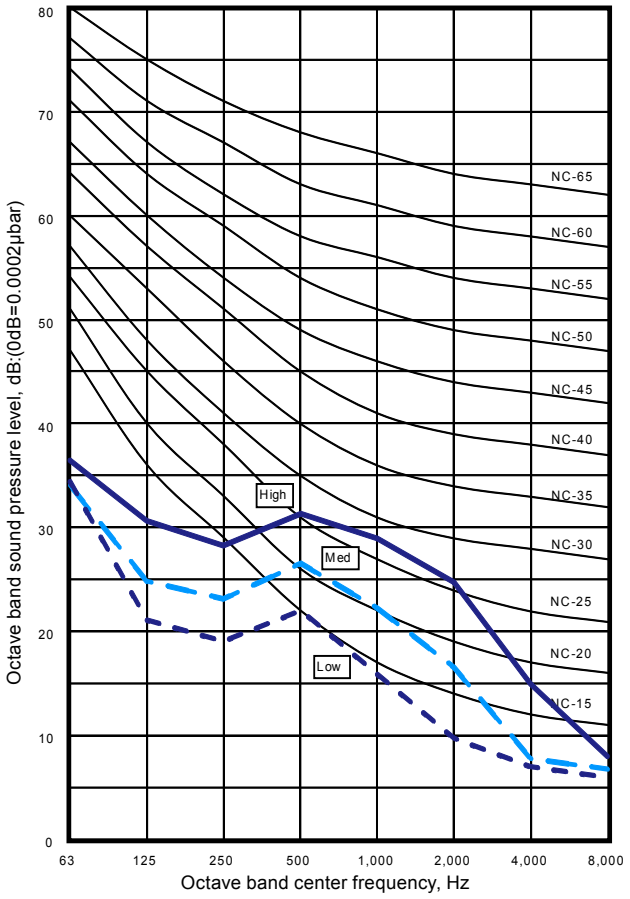

■ MODEL : AS∗A07GACH

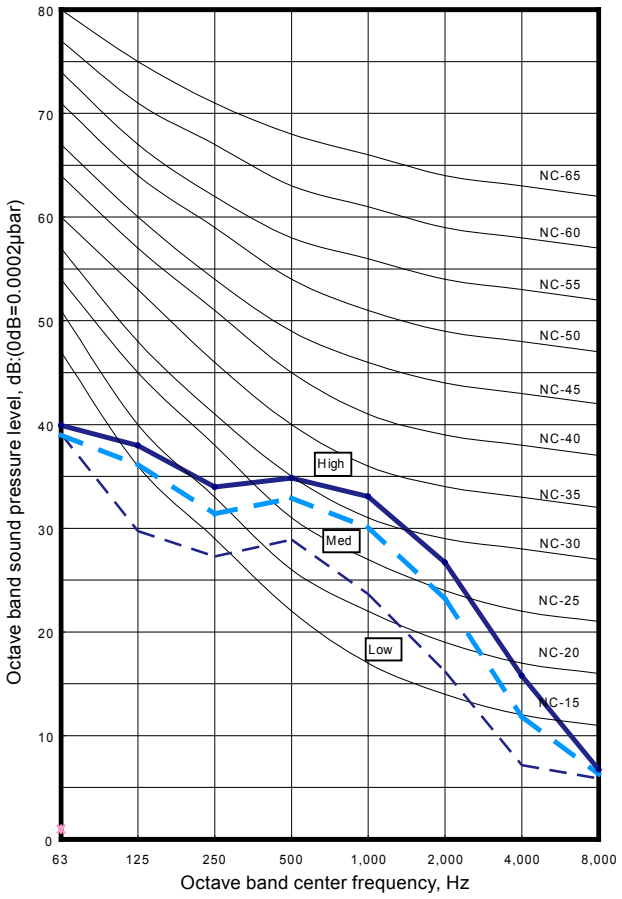

■ MODEL : AS∗A09GACH

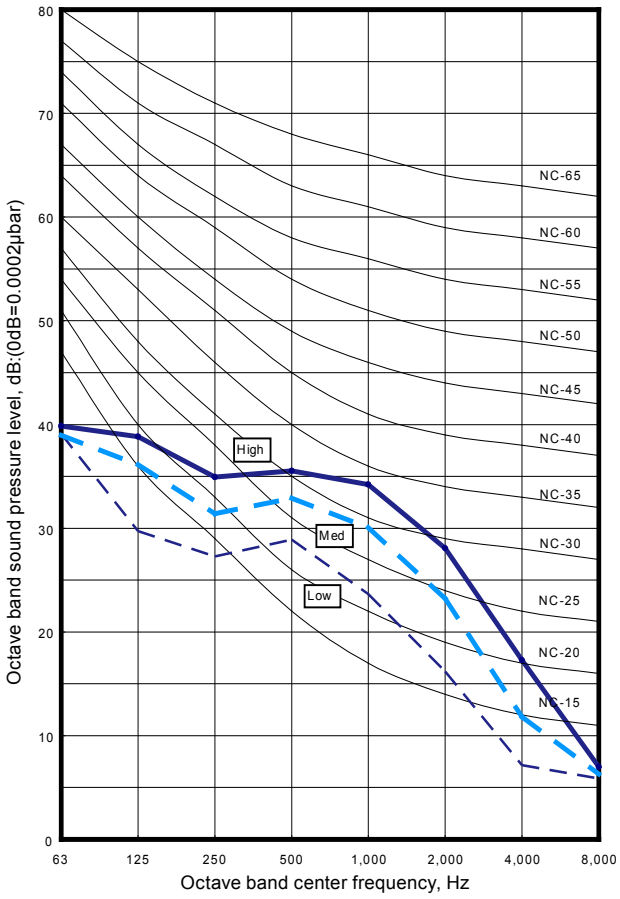

■ MODEL : AS∗A12GACH

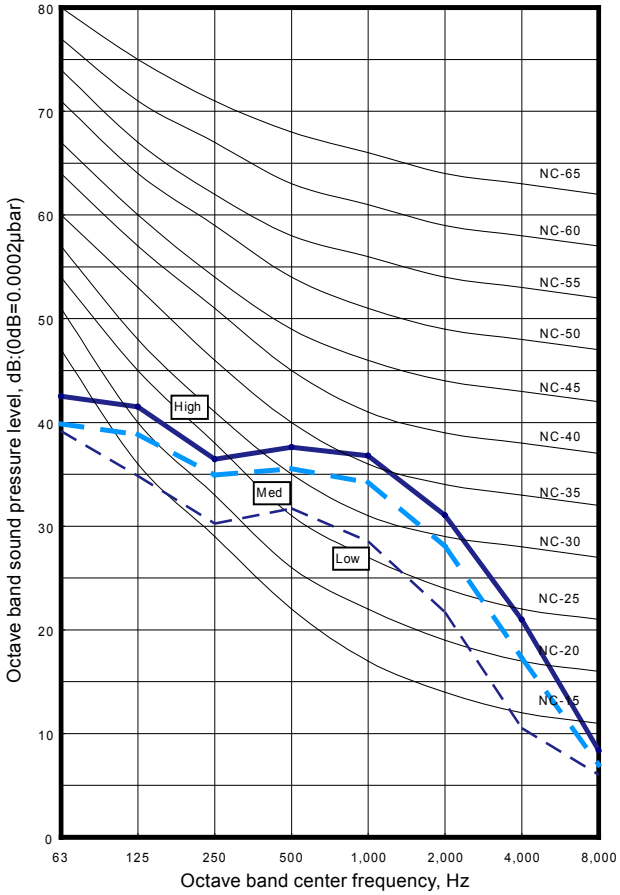

■ MODEL : AS∗A14GACH

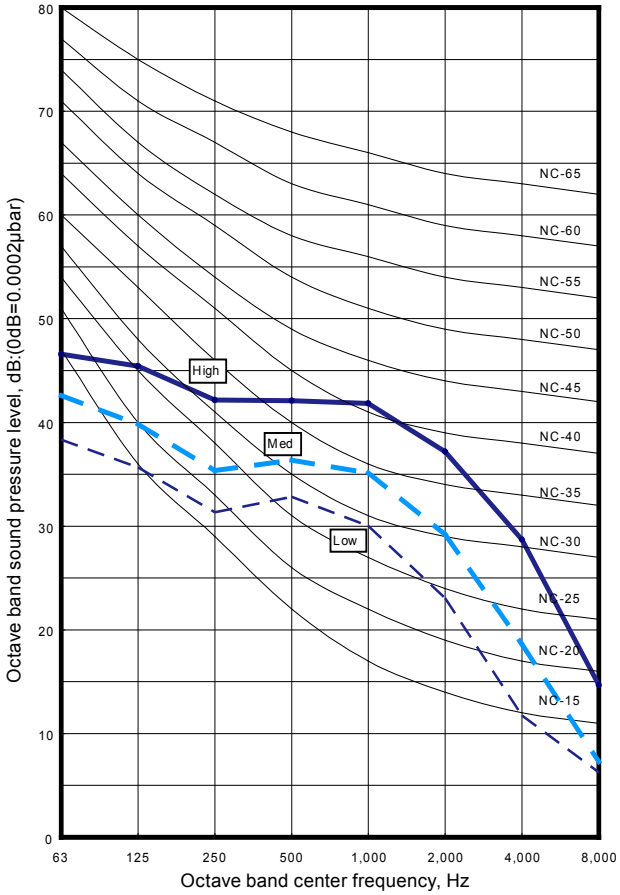

INDOOR UNITS

9-10. WALL MOUNTED TYPE (EEV external model)

■ MODEL : AS∗E04GACH

● COOLING

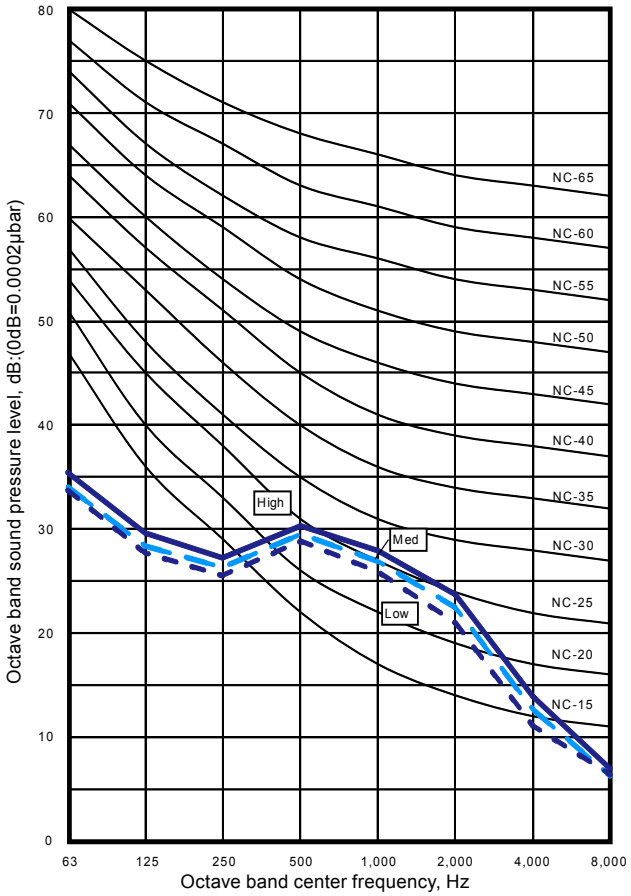

●HEATING

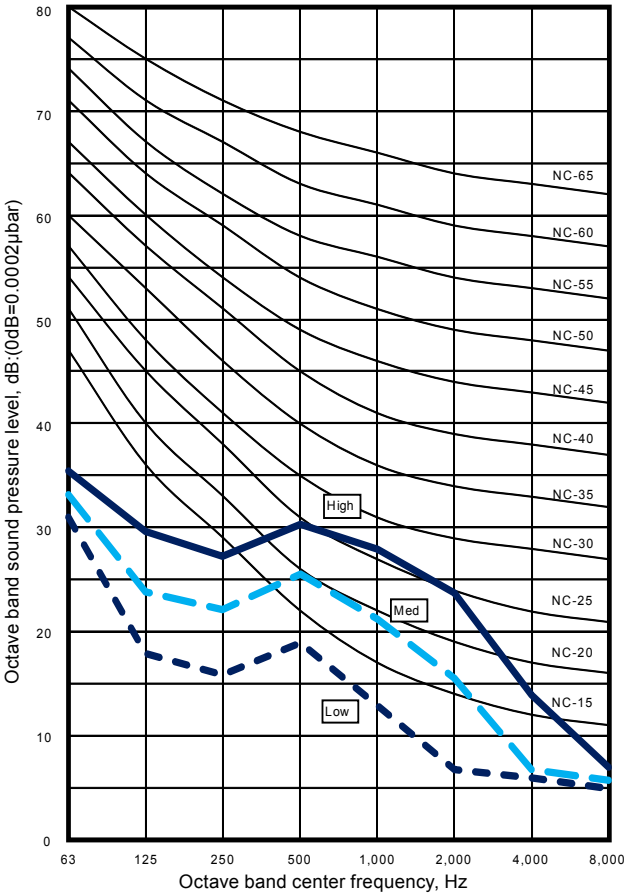

■ MODEL : AS∗E07GACH

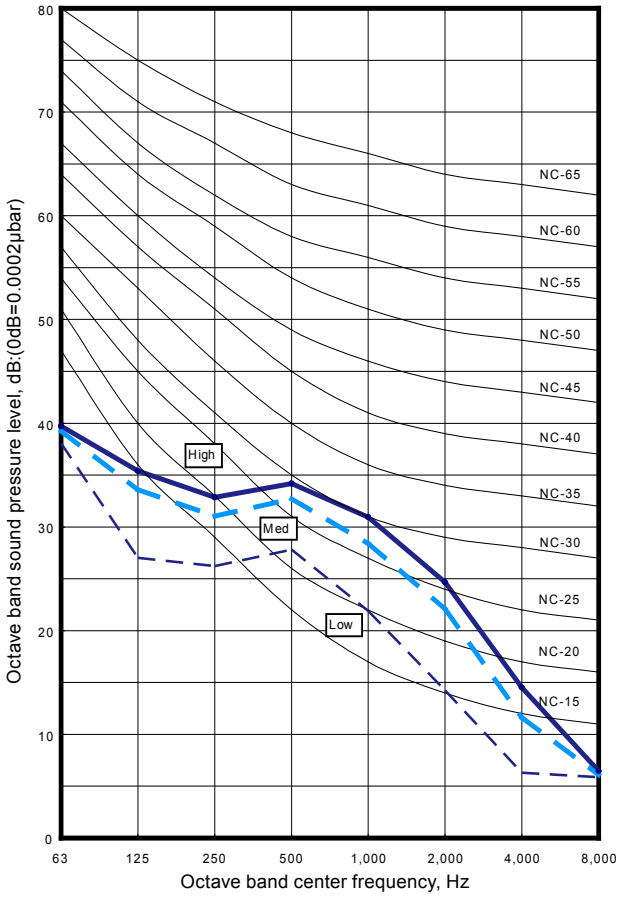

■ MODEL : AS∗E09GACH

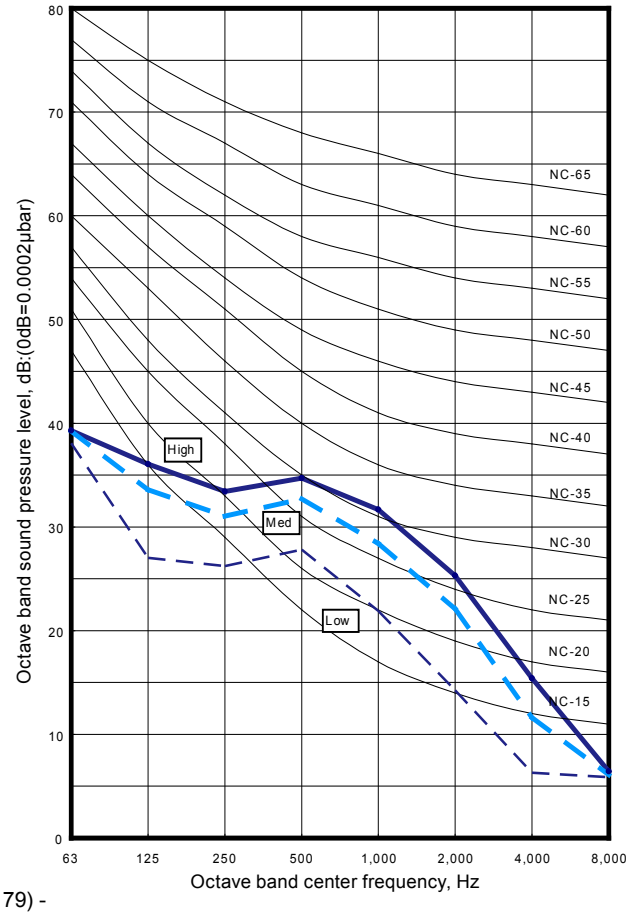

INDOOR UNITS

■ MODEL : AS∗E12GACH

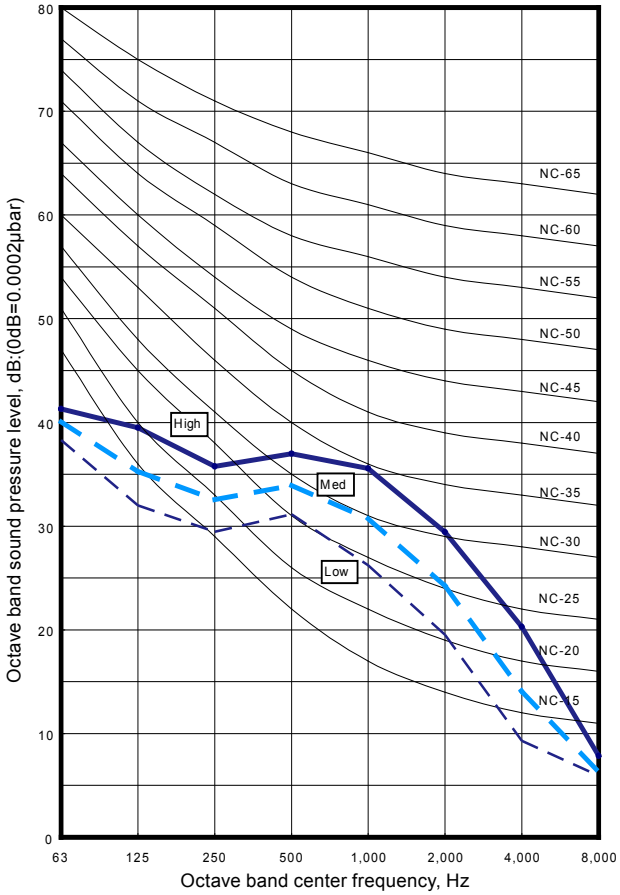

■ MODEL : AS∗E14GACH

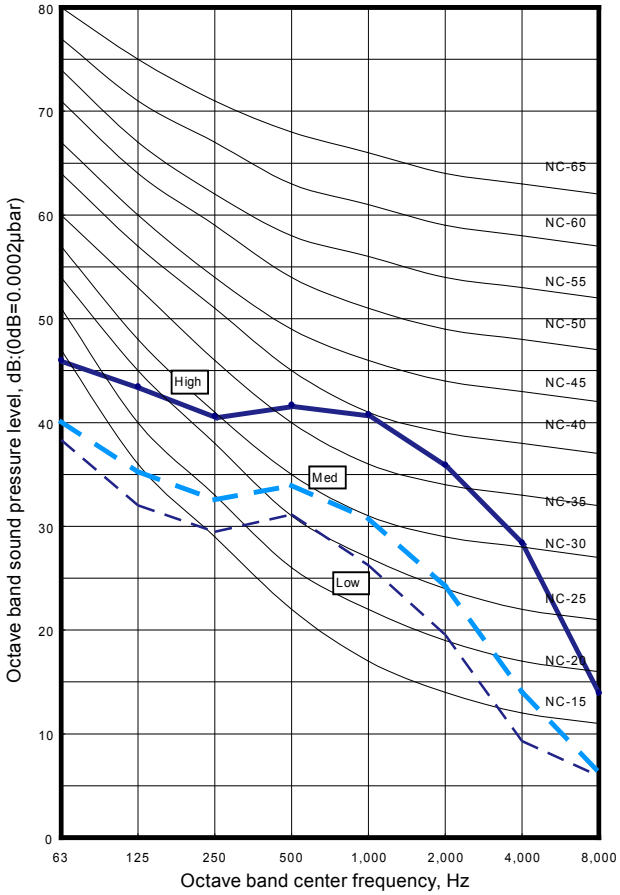

INDOOR UNITS

9-11. WALL MOUNTED TYPE

■ MODEL : AS∗A18GACH

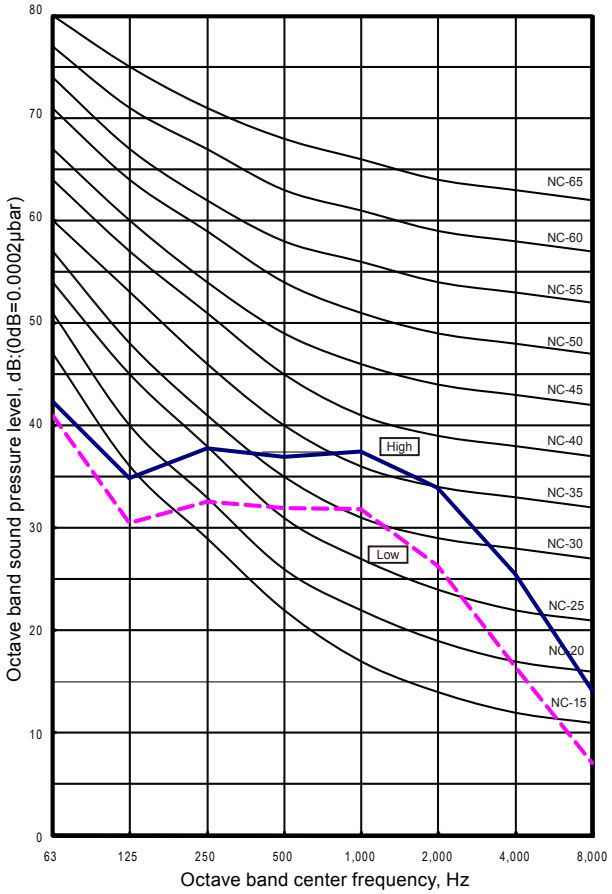

■ MODEL : AS∗A24GACH

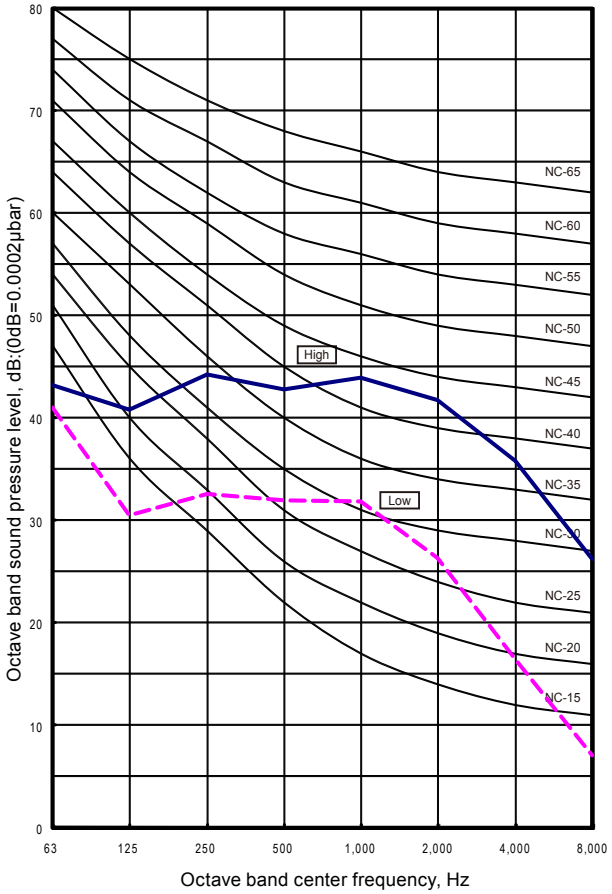

■ MODEL : AS∗A30GACH

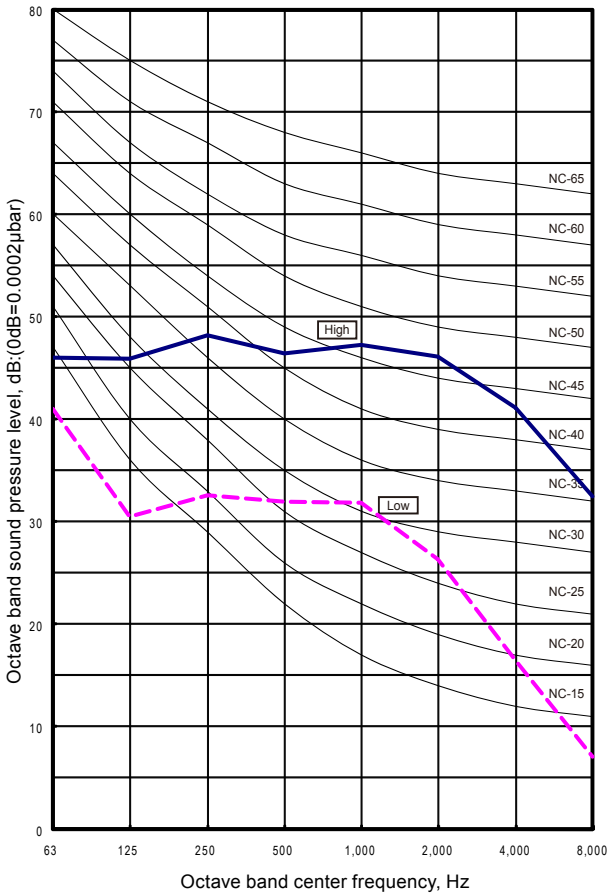

INDOOR UNITS

■ SOUND LEVEL CHECK POINT

- Compact cassette type
- Cassette type

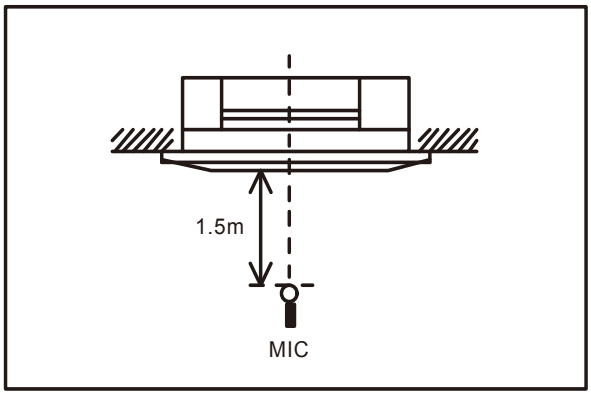

- Slim duct type
- Low static pressure duct type
- Medium static pressure duct type
- High static pressure duct type

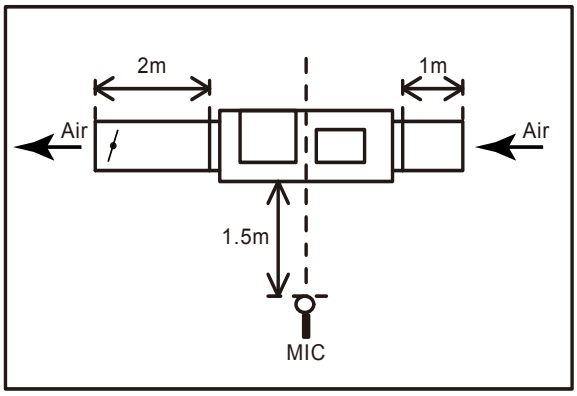

- Floor / Ceiling type
- Ceiling type

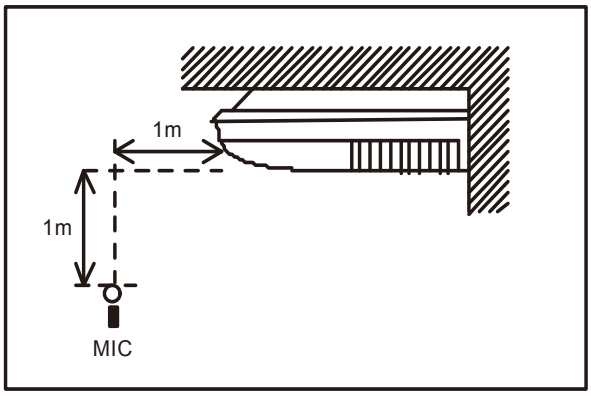

- Floor / Ceiling type

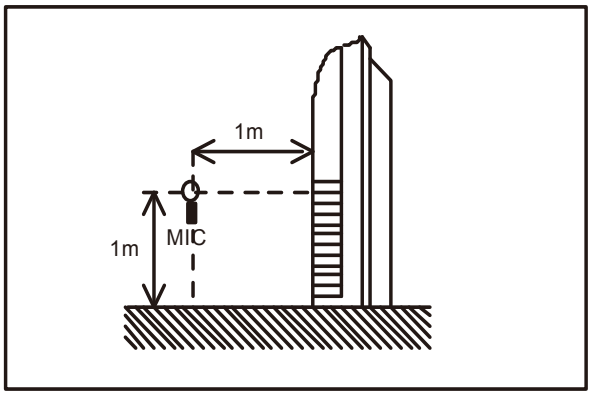

- Wall mounted type

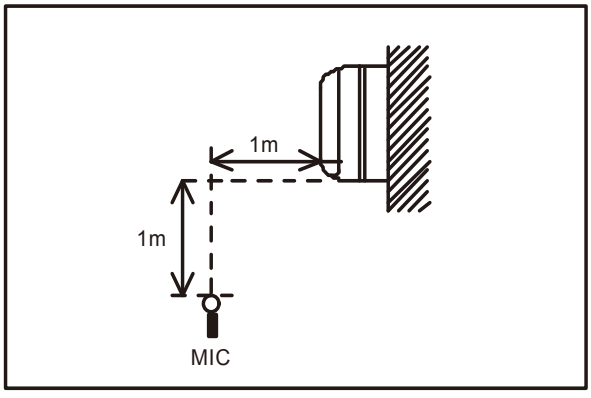

INDOOR UNITS

10. SAFETY DEVICES

Model and type		PCB fuse	Fan motor thermal protector	Terminal thermal fuse	Float switch
Compact Cassette	AUXB04GALH AUXB07GALH AUXB09GALH AUXB12GALH AUXB14GALH AUXB18GALH AUXB24GALH	250V 3.15A	140±20°C OFF 110±20°C ON	—	○
Cassette	AUXD18GALH AUXD24GALH AUXA30GALH AUXA36GALH AUXA45GALH AUXA54GALH	250V 3.15A	110^{+15}_{-10}°C OFF $105+^{15}_{-10}$°C ON	—	○
Low Static Pressure Duct / Concealed Floor	ARXB07GALH ARXB09GALH ARXB12GALH ARXB14GALH	250V 3.15A	140 ± 5°C	—	△*2)
	ARXB18GALH		150 ± 5°C		
Slim Duct / Slim Concealed Floor	ARXD04GALH ARXD07GALH ARXD09GALH ARXD12GALH ARXD14GALH ARXD18GALH ARXD24GALH	250V 3.15A	135±15°C OFF 115±15°C ON	—	○
Medium Static Pressure Duct	ARXA24GBLH	250V 5A	135±15°C OFF 115±15°C ON	—	△*2)
	ARXA30GBLH ARXA36GBLH ARXA45GBLH		115±15°C OFF 70°C or less ON		
High Static Pressure Duct	ARXC36GATH	250V 3.15A 250V 10A *1)	150 ± 5°C	—	—
	ARXC45GATH ARXC60GATH		145 ± 5°C		
	ARXC72GATH	250V 3.15A 250V 15A *1)	145 ± 5°C	—	—
	ARXC90GATH				
Floor / Ceiling	AB∗A12GATH AB∗A14GATH AB∗A18GATH AB∗A24GATH	250V 3.15A	135±15°C OFF 115±15°C ON	—	—
Ceiling	AB∗A30GATH AB∗A36GATH AB∗A45GATH AB∗A54GATH	250V 3.15A	135±15°C OFF 115±15°C ON	—	△ *2)
Wall Mounted	AS∗A04GACH AS∗A07GACH AS∗A09GACH AS∗A12GACH AS∗A14GACH	250V 3.15A	150±15°C OFF 120±15°C ON	102°C OFF	—
Wall Mounted (EEV external model)	AS∗E04GACH AS∗E07GACH AS∗E09GACH AS∗E12GACH AS∗E14GACH	250V 3.15A		102°C OFF	—
Wall Mounted	AS∗A18GACH AS∗A24GACH AS∗A30GACH	250V 3.15A	120±15°C OFF	102°C OFF	—

*1) Fuse for fan motor.

*2) Including in the Drain Pump Unit (Optional parts)

INDOOR UNITS

Refrigerant R410A INVERTER

AIRSTAGE™
Variable Refrigerant Flow System

5. CONTROL SYSTEM

DTV_VR2E018E_03--CHAPTER05
2013.04.01

CONTENTS

5. CONTROL SYSTEM

1. CONTROL SYSTEM ..... 05 - 01
   1-1. LINE UP OF CONTROLLERS ..... 05 - 01
   1-2. CONTROL SYSTEM DESIGN ..... 05 - 03
   1-3. SYSTEM CONFIGURATION EXAMPLES ..... 05 - 04
   1-4. FEATURES OF CONTROL SYSTEM ..... 05 - 10
   1-5. WIRING SYSTEM ..... 05 - 11
   1-6. CONTROL EQUIPMENT DESIGN LIMITATION ..... 05 - 12

2. CONTROL UNITS ..... 05 - 13
   2-1. SYSTEM CONTROLLER ..... 05 - 14
   2-2. TOUCH PANEL CONTROLLER ..... 05 - 22
   2-3. CENTRAL REMOTE CONTROLLER ..... 05 - 34
   2-4. GROUP REMOTE CONTROLLER ..... 05 - 43
   2-5. WIRED REMOTE CONTROLLER (Touch panel) ..... 05 - 47
   2-6. WIRED REMOTE CONTROLLER ..... 05 - 54
   2-7. SIMPLE REMOTE CONTROLLER (With Operation mode) ..... 05 - 59
   2-8. SIMPLE REMOTE CONTROLLER (Without Operation mode) ..... 05 - 64
   2-9. WIRELESS REMOTE CONTROLLER ..... 05 - 69
   2-10. IR RECEIVER UNIT (for ALL DUCT TYPE) ..... 05 - 73
   2-11. IR RECEIVER UNIT (for CASSETTE TYPE) ..... 05 - 76
   2-12. REMOTE SENSOR UNIT ..... 05 - 78
   2-13. GROUP CONTROL METHOD ..... 05 - 80
   2-14. COMPARISON TABLE OF CONTROLLERS ..... 05 - 82

3. ADAPTOR / CONVERTOR UNITS ..... 05 - 84
   3-1. NETWORK CONVERTOR ..... 05 - 85
   3-2. NETWORK CONVERTOR FOR LonWorks® ..... 05 - 90
   3-3. BACnet® GATEWAY ..... 05 - 100
   3-4. SIGNAL AMPLIFIER ..... 05 - 105
   3-5. EXTERNAL SWITCH CONTROLLER ..... 05 - 109

4. SERVICE & WEB MONITORING TOOL ..... 05 - 113
   4-1. SERVICE TOOL (Software) ..... 05 - 113
   4-2. WEB MONITORING TOOL (Software) ..... 05 - 117

1. CONTROL SYSTEM

1-1. LINE UP OF CONTROLLERS

■ FEATURES OF CONTROL SYSTEM

Installation Work Saving

Simplified wiring and reduced installation cost by the use of non-polar 2-core transmission lines.

Control System Configuration Expansion

Optimum system configuration by various controller combinations, allowing for various applications and future expansion.

Easy Operation

Advanced control functions can be set up with the easy-to-use setting operation.

Free System Configuration

Up to 400 indoor units are connectable in one system. System is adaptable to various applications, from small to large buildings.



CONTROL SYSTEM

Air Conditioning Central Control

System Controller, Touch Panel Controller, Central Remote Controller and Group Remote Controller specially designed for centralized control.



System Controller

UTY-APGX

High performance and optimum control system for all building applications

A high degree of building air conditioning management is possible including electricity charge apportionment and numerous data management functions as well as standard equipment monitoring and control.



Touch Panel Controller

UTY-DTG∗

Functionality in a compact housing with built-in schedule timer

Allows operation and monitoring to be achieved from the central control room, at each floor, by each tenant, or in the plant room.



Central Remote Controller

UTY-DCG∗

Central control of small- and medium-sized buildings and tenants.

The operation status of all connected indoor units can be viewed at a glance on a large LCD monitor to simplify individual control to batched control.



Group Remote Controller

UTY-CGG∗

Group control of indoor units with simple operation

Network convertor (UTY-VGGX) is required to connect group remote controllers to a VRF system.

Web Monitoring Tool

Trouble-shooting is performed by monitoring each air conditioning unit remotely during periodical system checks.

Remote side

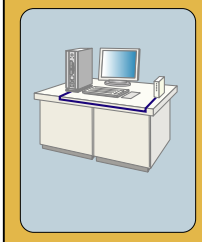

System Status & Error Information

VRF network system side

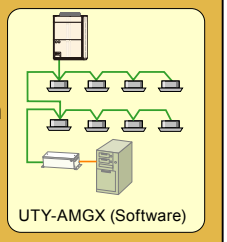

Error notification can be automatically transmitted to several locations using the internet*.
Requires either a dedicated internet connection* or public telephone line.

*Fixed global IP address is required.

Air Conditioning Individual Control

A range of Remote Controllers suitable for a wide range of individual control situations, using various built-in timers

Wired Remote Controller (Touch panel)



UTY-RNR∗

Wired remote controller with the largest LCD touch panel in the industry

Wired Remote Controller

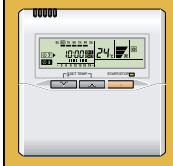

UTY-RNK∗

The room temperature can be controlled by detecting the temperature accurately with the built-in thermo sensor.

Simple Remote Controller (With Operation mode)



UTY-RSK∗

Compact remote controller concentrates on the basic functions such as Start/Stop, Fan Control, Temperature Setting and Operation mode.

Simple Remote Controller (Without Operation mode)



UTY-RHK∗

Compact remote controller concentrates on the basic functions such as Start/Stop, Fan Control and Temperature Setting.

Wireless Remote Controller



UTY-LNH∗

Simple and sophisticated operation with a choice of 4 daily timers

System Controller

Suitable for remote operation and control of large sites with many buildings.

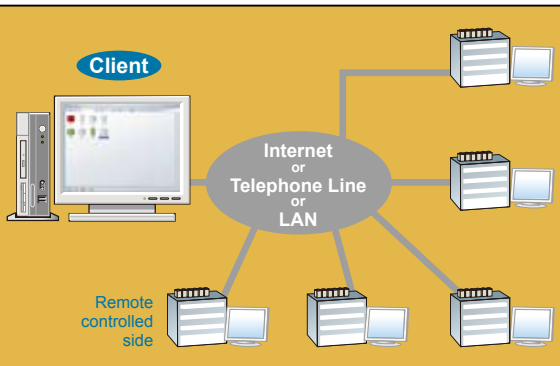

Central air conditioning control among several buildings can be managed via internet.
Remote controlled sites up to 10.

1-2. CONTROL SYSTEM DESIGN

■ ADVANCED INTEGRATED CONTROL SYSTEM

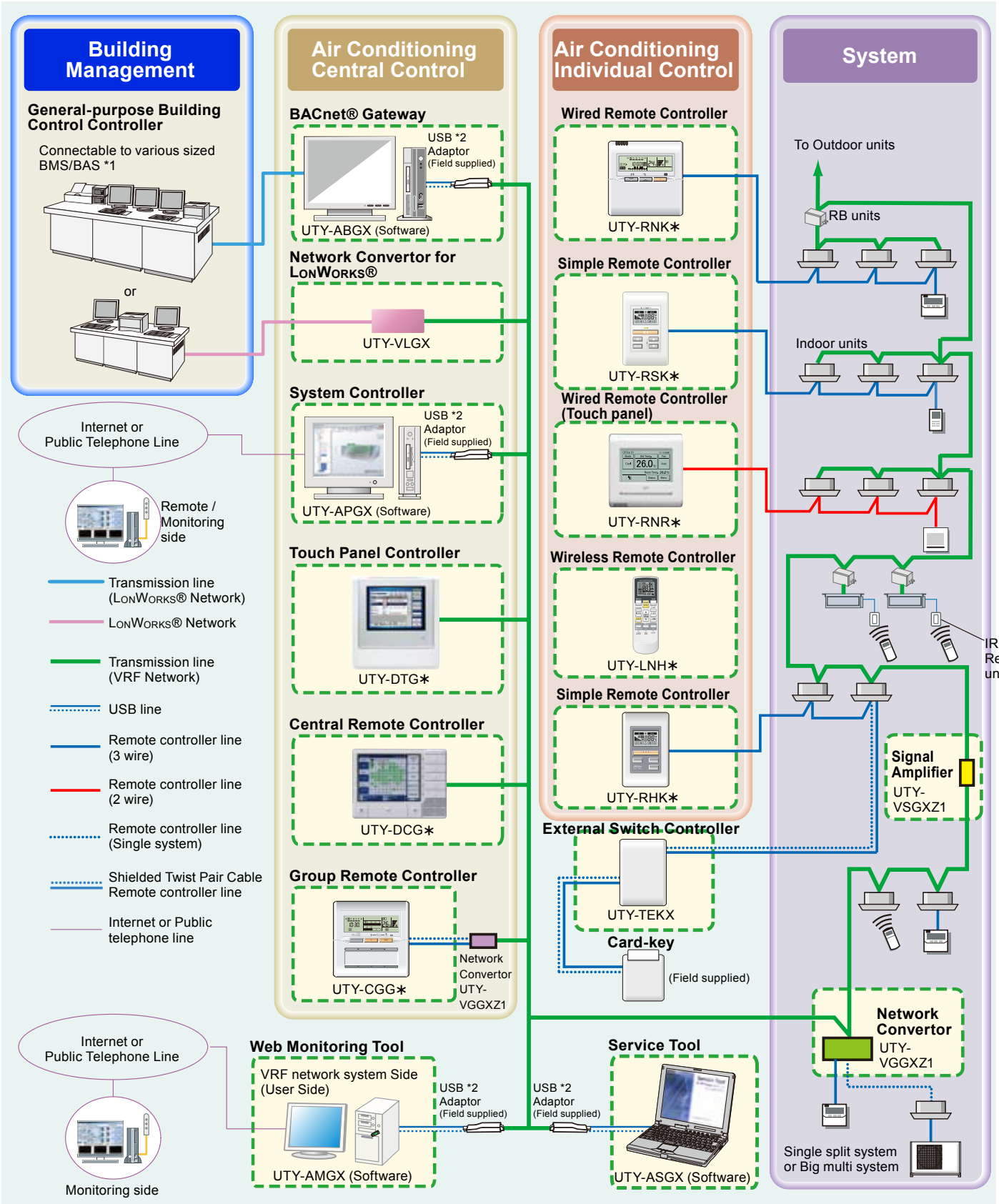

*1: BMS/BAS : Building Management System / Building Automation System.
*2: U10 USB Network Interface - TP/FT-10 (Echelon® Corporation)

CONTROL SYSTEM

1-3. SYSTEM CONFIGURATION EXAMPLES

■ INDIVIDUAL CONTROL

Wired Remote Controller (Touch panel)

- Up to 16 indoor units can be controlled with one wired remote controller.
- Wired(Touch panel) and wireless remote controllers can be used jointly.
- Four remote controllers can be connected with single indoor unit.

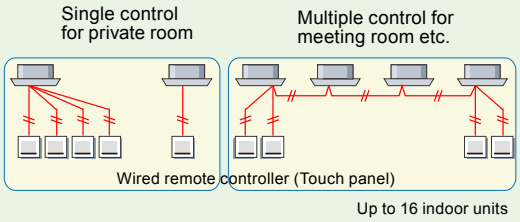

Wired Remote Controller

- Up to 16 indoor units can be controlled with one wired remote controller.
- Wired, simple, and wireless remote controllers can be used jointly.
- Two remote controllers can be connected with single indoor unit.

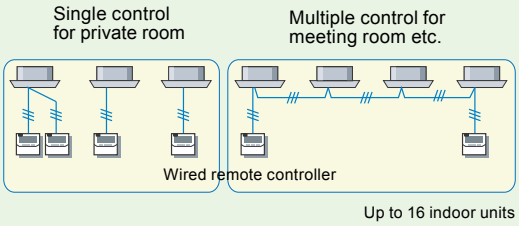

Simple Remote Controller

- Up to 16 indoor units can be controlled with one simple remote controller.
- Enables easy control of basic functions by the hotel or office guest.
- Wired, simple, and wireless remote controllers can be used jointly.
- Two remote controllers can be connected with single indoor unit.

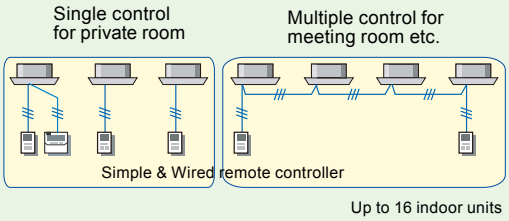

Wireless Remote Controller

- Up to 16 indoor units can be controlled with one wireless remote controller.
- Wired, simple, and wireless remote controllers can be used jointly.

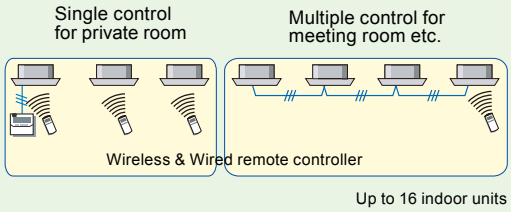

CONTROL SYSTEM

External Switch Controller

- Up to 16 indoor units can be controlled with one external switch controller.
- In combination with a field supplied card-key switch or other sensor, External switch controller allows control of basic functions by the hotel or office guest.

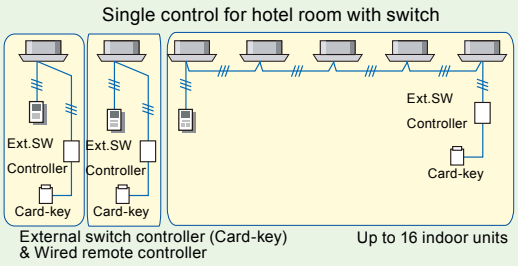

Single Split or Big Multi System Connectability

- Single spilit system or Big multi system can be connected to the VRF network system and can be controlled from Touch panel controller or System controller.

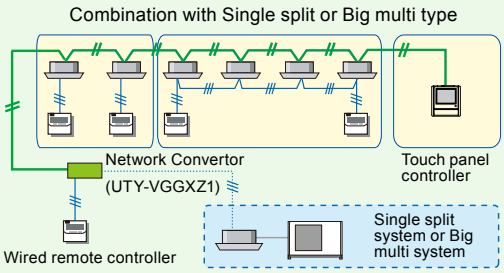

CONTROL SYSTEM

■ CENTRAL CONTROL

Group Remote Controller

- Up to 8 remote controller groups can be controlled with one group remote controller.
- Up to 4 Group remote controllers can be connected to a single network convertor (UTY-VGGXZ1).
- One network convertor (UTY-VGGXZ1) is allowed 2 refrigerant systems.
- Up to a total of 16 network convertors, central remote controllers and touch panel controllers can be connected to single VRF network system.

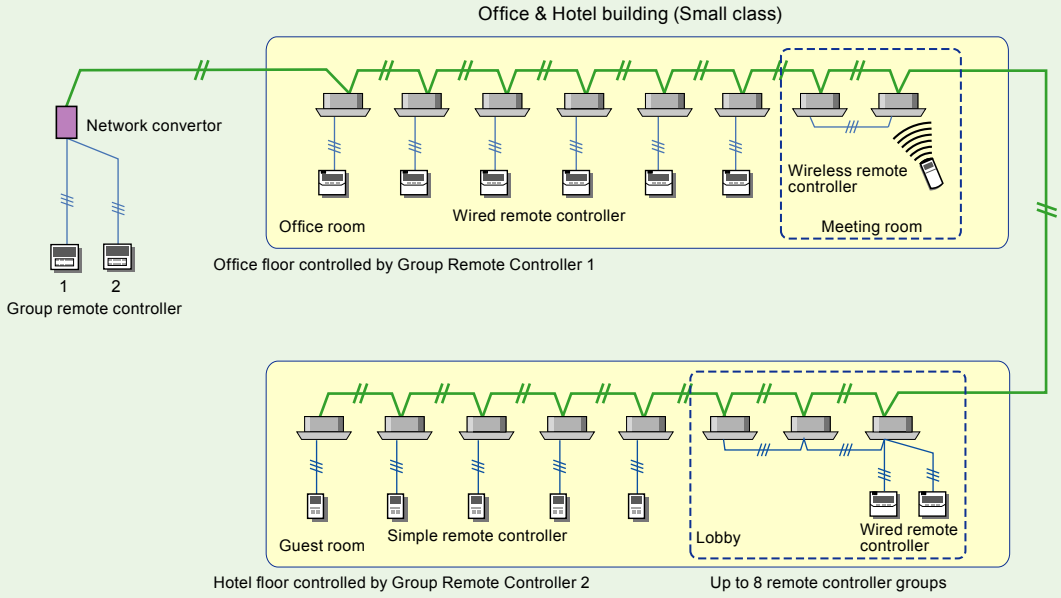

Central Remote Controller

- Up to 100 indoor units / 16 groups can be controlled with one central remote controller.
- Up to a total of 16 network convertors, central remote controllers and touch panel controllers can be connected to single VRF network system.

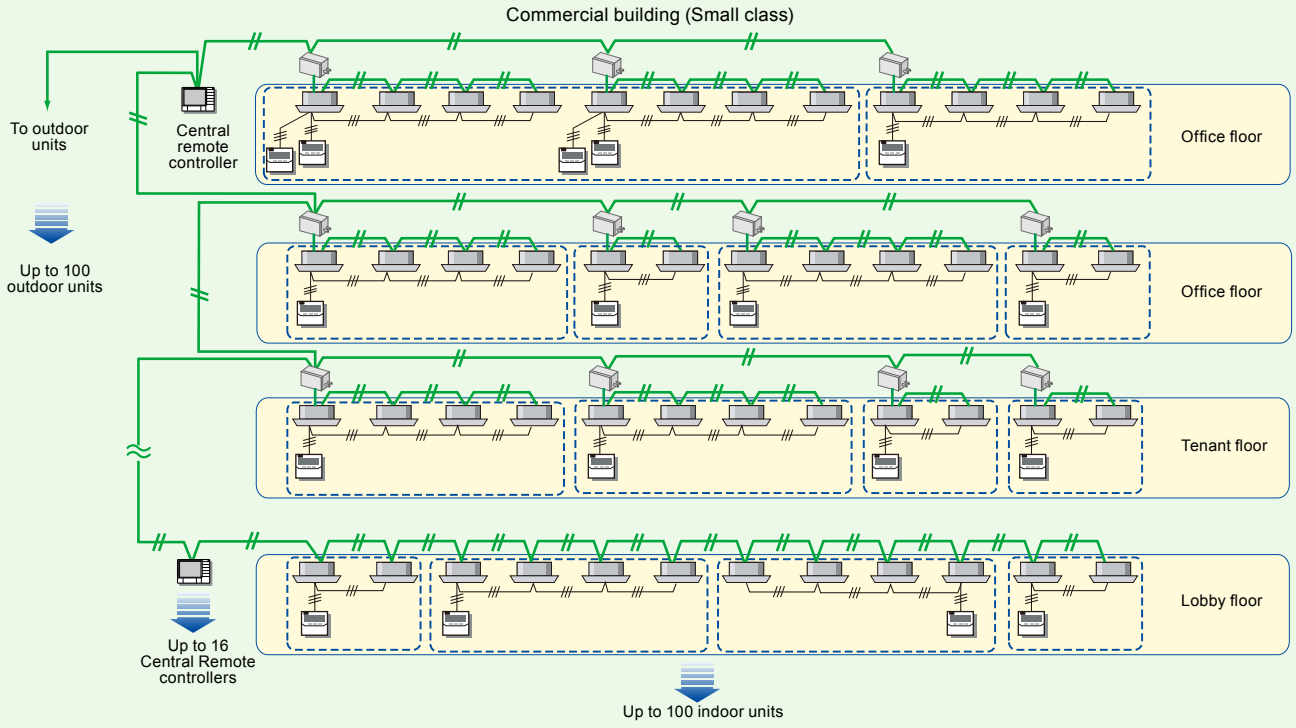

CONTROL SYSTEM

Touch Panel Controller

- Up to 400 indoor units / 400 groups can be controlled with one touch panel controller.
- Up to a total of 16 network convertors, central remote controllers and touch panel controllers can be connected to a single VRF network system.

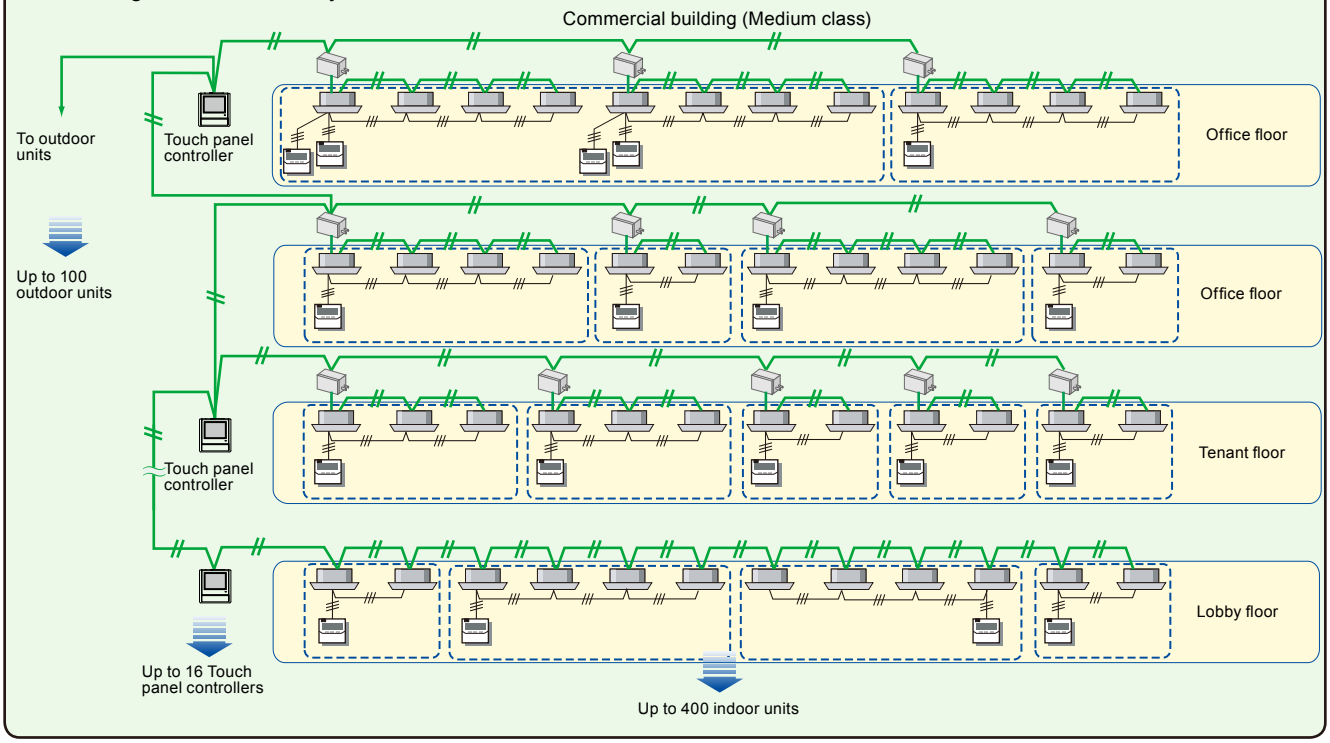

System Controller

- UP to 1600 (400 x 4 VRF network system) indoor units / 1600 groups can be controlled with one System Controller.
- Incorporates a function that automatically calculates electrical charge.

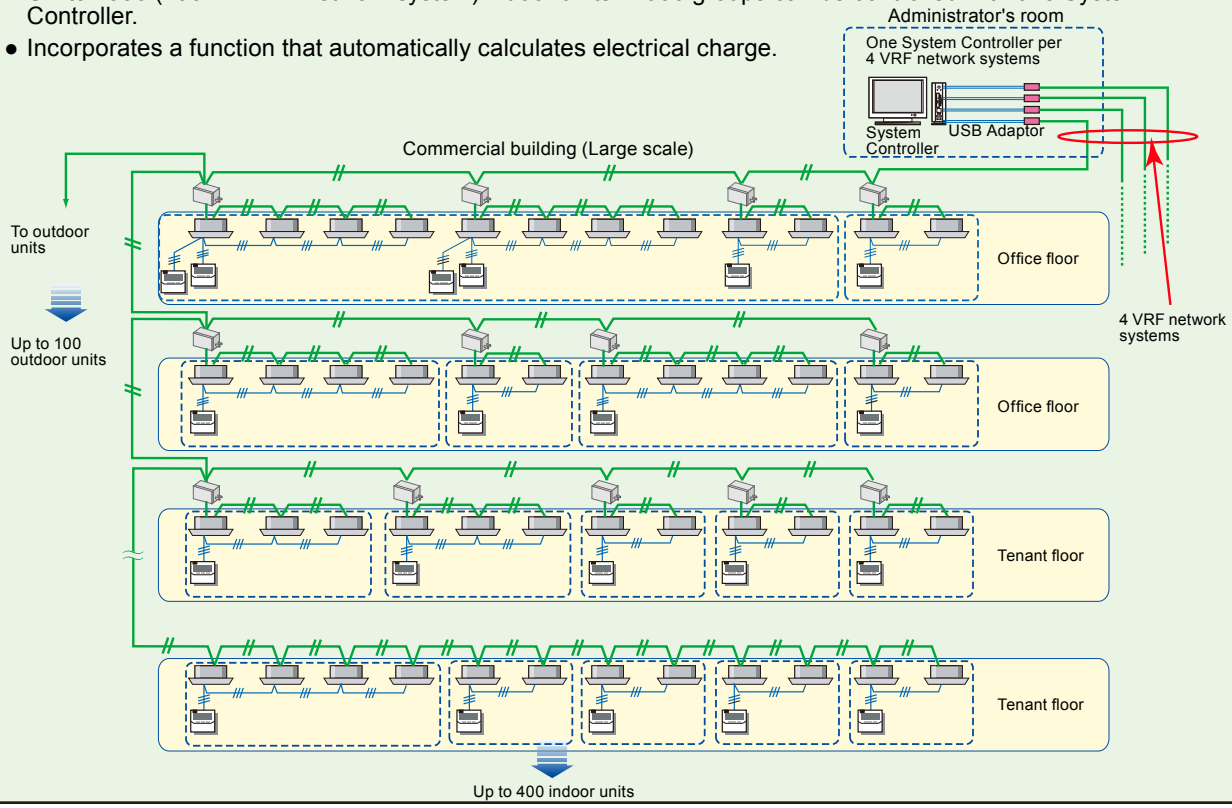

System Controller can perform as an on site central control and remote central control.

On site central control (Max. 4 VRF network systems)

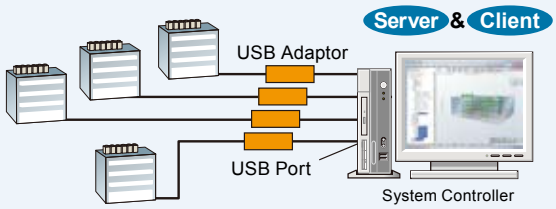

1 VRF network system	Max. controllable		Max. transmission line length
	400 Indoor units	100 Outdor units	3,600m

Remote central control (Controlled sites of up to 10)

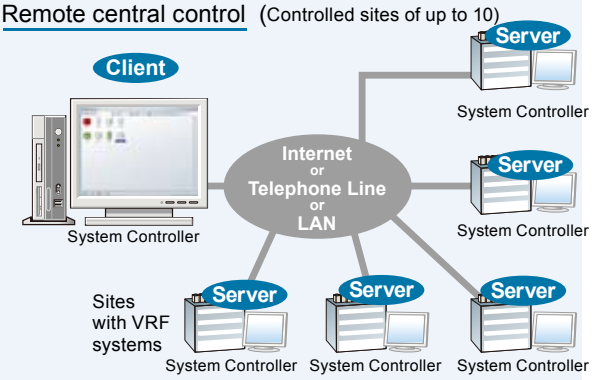

Remote central control (Monitored from up to 5 Clients)

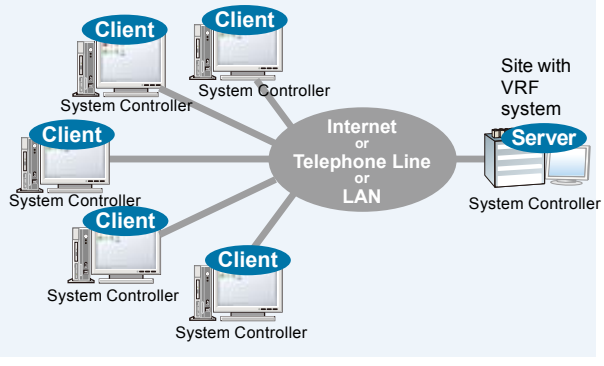

CONTROL SYSTEM

CONTROL SYSTEM

■ INDOOR UNIT TYPE AND THE APPLICABLE CONTROL METHOD

	Wired Remote Controller (Touch panel)	Wired Remote Controller	Simple Remote Controller	Wireless Remote Controller	External Switch Controller
	UTY-RNR∗	UTY-RNK∗	UTY-RSK∗ UTY-RHK∗	UTY-LNH∗	UTY-TEKX
Compact Cassette	○	○	○	○	○
Cassette	○	○	○	△ *1	○
Low Static Pressure Duct / Concealed Floor	○	○	○	△ *2	○
Slim Duct / Slim Concealed Floor	○	○	○	△ *2	○
Low Static Pressure Duct	○	○	○	△ *2	○
Medium Static Pressure Duct	○	○	○	△ *2	○
High Static Pressure Duct	○	○	○	△ *2	○
Floor / Ceiling	○	○	○	○	○
Ceiling	○	○	○	○	○
Wall Mounted (EEV external)	○	○	○	○	○
Wall Mounted	○	○	○	○	○

*1 : IR Receiver Unit (Optional part : UTY-LRH∗B1) is necessary.

*2 : IR Receiver Unit (Optional part : UTB-∗WC) is necessary.

CONTROL SYSTEM

■ CONVERTORS (ADAPTORS) AND RELATED EQUIPMENTS (SYSTEM)

		Within VRF network system							VRF network system ↔ Other System	
		System Controller	Touch Panel Controller	Central Remote Controller	Group Remote Controller	Web Monitoring Tool	Service Tool	BACnet® Gateway	Single Split System / Big multi System	BMS/BAS
		UTY-APGX	UTY-DTG∗	UTY-DCG∗	UTY-CGG∗	UTY-AMGX	UTY-ASGX	UTY-ABGX		
Network Convertor	UTY-VGGXZ1	-	-	-	○	-	-	-	○	-
USB adaptor *3	Field supplied	○	-	-	-	○	○	○	-	-
Network Convertor for LonWorks®	UTY-VLGX	-	-	-	-	-	-	-	-	○
BACnet® Gateway	UTY-ABGX	-	-	-	-	-	-	-	-	○

*3 : U10 USB Network Interface TP/FT-10 is a product of Echelon® Corporation.

1-4. FEATURES OF CONTROL SYSTEM

■ SIMPLE WIRING SYSTEM

- 1 transmission line can interlink all equipments regardless refrigerant circuit.
- Non polar 2-conductor transmission cable.
- Central control equipment can be connected anywhere on the transmission line, with no need to bring from the outdoor unit.
  - -Making up the network system easily.
  - -Saving the total wiring length.
  - -Preventing incorrect connection.
  - -Saving installation time.

■ ADOPTION TO LARGE SCALE BUILDINGS

- 1 VRF network system allows to form large scale application as follows.
  - -Total transmission wiring length can be extended up to 3,600m. (with signal amplifier unit.)
  - -Indoor units can be connected up to 400.
  - -Outdoor units can be connected up to 100.
  - -Touch Panel Controller can be covered to control whole equipment centrally.
  - -By using multiple Touch Panel Controllers, control by individual zone or floor is possible for convenient usage in various building applications.
  - -By adopting a separate interface, it is possible to connect other products and systems by FUJITSU GENERAL such as Single type models (excluding some models), J series or Multi air conditioner for buildings (e.g. Big multi). (Refer to 3-1. NETWORK CONVERTOR)
- System Controller allows to control up to 4 VRF network systems (Max.1600 indoor units), suitable for huge scale application.

■ RELIABILITY AND EASY MAINTENANCE

- Stand-alone transmission NETWORK, allows each equipment to operate individually, thus failure of the units does not affect other indoor units operation.
- When a failure occurs, the error code is displayed on the individual controller and central controller. (except Wireless Remote Controller)
- Also error histories can memory by each individual controller and central controller. (except Wireless Remote Controller)
- System Controller and Web Monitoring Tool allow to monitor operation status in real time via INTERNET, enable diagnoses quickly.
- Maintenance work is improved efficiency, because Service Tool can be connected to anywhere on the transmission line.

CONTROL SYSTEM

1-5. WIRING SYSTEM

- Wiring configulation of the control system is made of power source wiring, transmission wiring and remote controller wiring.
- Total wiring length (total length of transmission line) can be extended up to 3,600m (by using signal amplifiers).

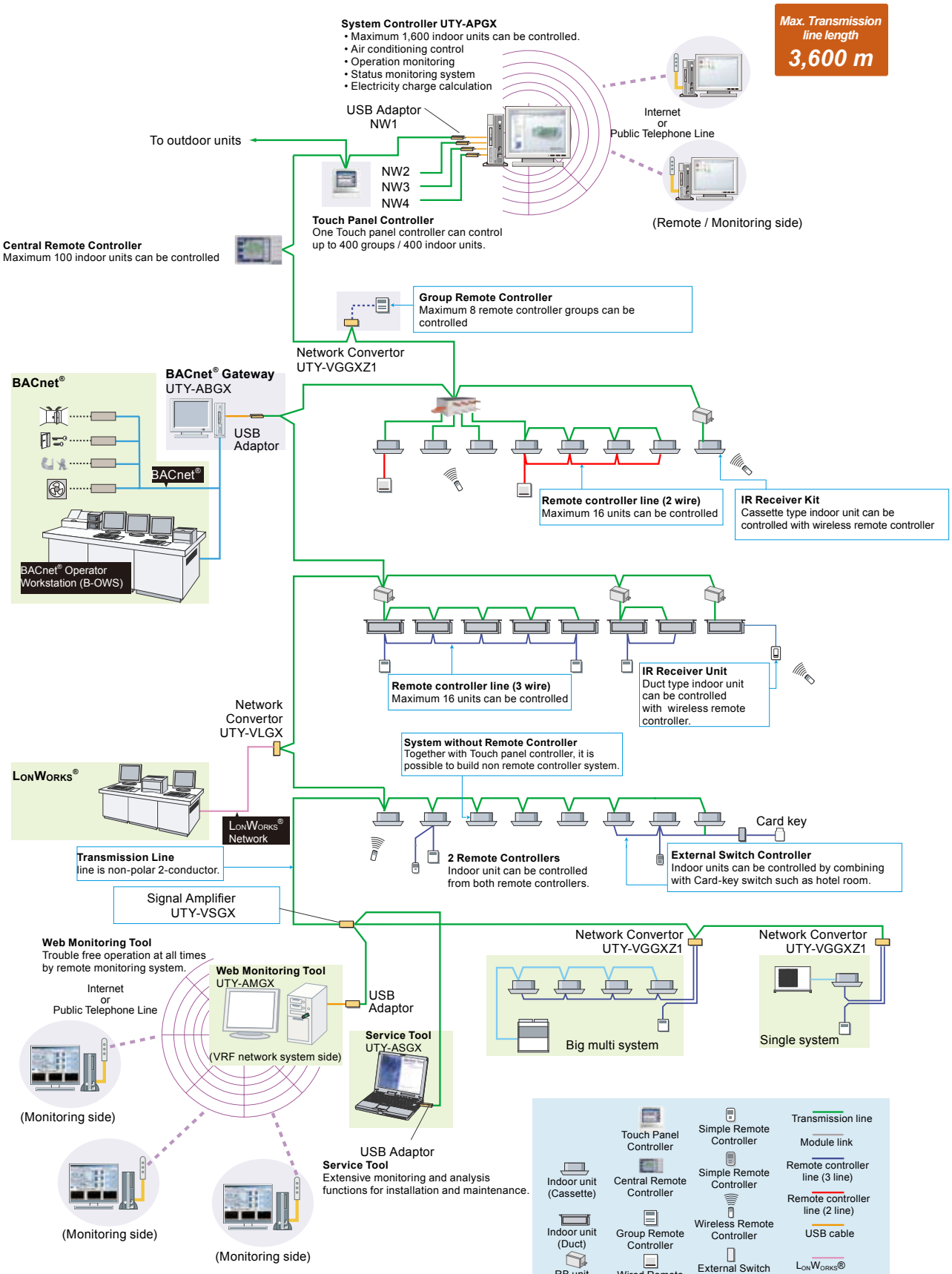

Combination of individual remote controller

Wired, simple and wireless remote controllers can be used jointly.

CONTROL SYSTEM

1-6. CONTROL EQUIPMENT DESIGN LIMITATION

			Model	Necessary equipment	Number of connectable units	Number of manageable Indoor units	Connectable outdoor units
Controller	Central Controller	System Controller	UTY-APGX	USB Adaptor	1 / system	1600 (x 4 VRF Network)	400 (x 4 VRF Network)
		Group Remote Controller	UTY-CGG∗	UTY-VGGXZ1	4 / UTY-VGGXZ1	2 refrigerant system	
		Touch Panel Controller	UTY-DTG∗	—	16 / system	400	100
		Central Remote Controller	UTY-DCG∗	—		100	
Adaptor / Convertor		Network Convertor	UTY-VGGXZ1	—	100 / system *1	—	—
		Network Convertor for LonWorks® *3	UTY-VLGX	—	1 / system	128 *2	100
		BACnet® Gateway	UTY-ABGX	USB Adaptor	1 / system	1600 (x 4 VRF Network)	400 (x 4 VRF Network)
		Signal Amplifier	UTY-VSGXZ1	—	40 / system	—	—
Service and Maintenance		Service Tool	UTY-ASGX	USB Adaptor	1 / system	400	100
		Web Monitoring Tool	UTY-AMGX	USB Adaptor		1600 (x 4 VRF Network)	400 (x 4 VRF Network)

*1: Maximum 100 Refrigerant systems.

*2: Maximum connectable indoor unit number per one Network Convertor.
(Please check the System Diagram (Item:3-2) for proper configuration)

*3: A maximum of 4 Network Convertors for LonWorks® can be connected to 1 BMS.

CONTROL SYSTEM

			Model	The number that can be connected
Controller	Individual Controller	Wireless Remote Controller	UTY-LNH∗	
		Wired Remote Controller (Touch panel)	UTY-RNR∗	4 / Remote control group
		Wired Remote Controller	UTY-RNK∗	2 / Remote control group
		Simple Remote Controller (with operation mode)	UTY-RSK∗	
		Simple Remote Controller (without operation mode)	UTY-RHK∗	
Adaptor / Convertor		External Switch Controller	UTY-TEKX	
		IR Receiver unit		1 / Indoor unit

2. CONTROL UNITS

- **System Controller**
- **Touch Panel Controller**
- **Central Remote Controller**
- **Group Remote Controller**
- **Wired Remote Controller**
- **Simple Remote Controller**
  (With operation mode)
  (Without operation mode)
- **Wireless Remote Controller**
- **IR Receiver Unit**

Central Control

System Controller	Touch Panel Controller	Central Remote Controller	Group Remote Controller
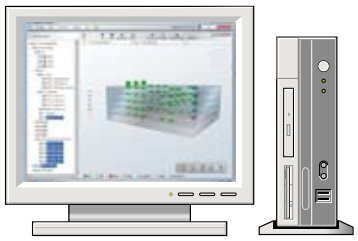			

Individual Control

Wired Remote Controller	Simple Remote Controller	Wireless Remote Controller	IR Receiver Unit
(Touch panel) 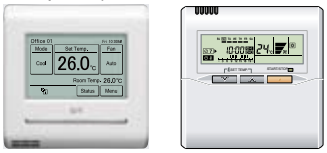	(With operation mode) (Without operation mode) 		

2-1. SYSTEM CONTROLLER

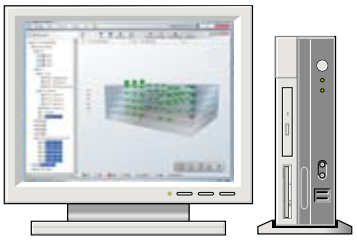

■ MODEL : UTY-APGX (Option: UTY-PEGX)

■ FEATURES

This system realizes the advanced general monitoring & control of VRF system from small scale buildings to large scale buildings.

- Up to a maximum of 4 network systems, 1600 indoor units can be controlled.
- Supports VRF VR-II Series, V-II Series, J-II Series, V Series & S Series. *1
- In addition to air conditioning precision control function, central remote control, electricity charge calculation, schedule management, and energy saving functions are strengthened and building manager and owner needs are met.
- Corresponds to 7 different language namely, English, Chinese, French, German, Spanish, Russian, Polish.
- Connection between VRF network system to personal computer is possible via small U10 USB interface. However, both U10 USB interface & personal computer are field supplied items.
- Extended feature*2 supported by use of options.

*1: Different VRF series may be connected for each of the 4 VRF networks supported by the System Controller, but different series may not coexist within the same network.

*2: Electricity charge apportionment using electricity meter, energy saving control. (Only for VR-II, V-II, J-II Series)

CONTROL SYSTEM

● User friendly view and operation

- Provides graphical view of units layout on site , building and floor layout just as they are located in the actual sites.
- Unit status can be monitored at a glance, selecting the appropriate view that just fit your purpose.
- Control can also be performed from various views as individual unit or as a whole site, building or a whole floor.
- User defined groups, that are neatly arranged as tree view, easy to find, monitor and operate.

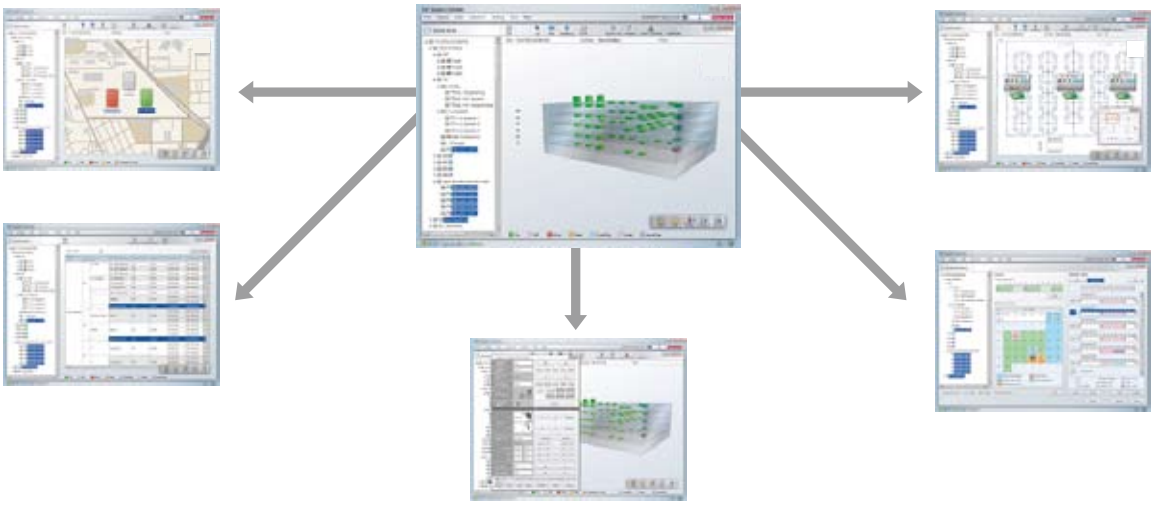

● Electricity charge apportionment

(Case1: Electricity meter is not connected)

- Total electricity charge, billed for multiple indoor units connected to the charge meter for air conditioning, is apportioned according to the accumulated operation time and indoor unit operating conditions.
- Allows accounting for special rates (e.g., for night or weekend use).
- Calculations can be printed as final bills.

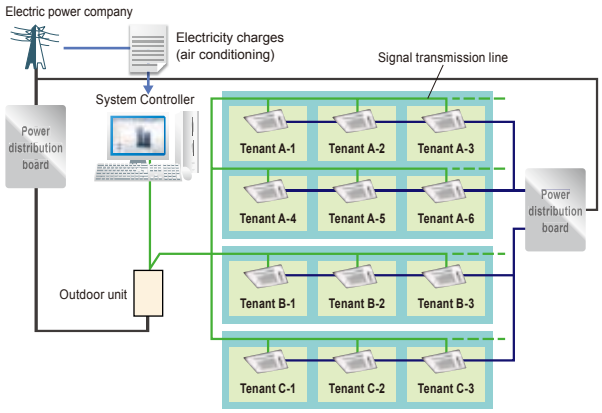

(Case2: Electricity meter is connected *1)

- Connecting a electricity meter allows the charges to be calculated for a variety of usage patterns such as charges for the power used on a per day basis.

*1: UTY-PEGX option is necessary.

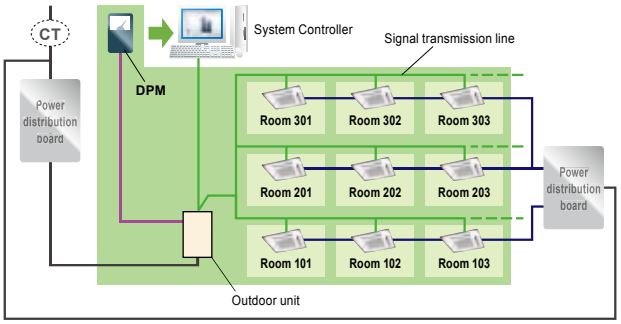

Note
● Multiple electricity meters can be installed taking into consideration the building design, etc. For example: ▪Install separate electricity meters for the outdoor units and indoor units ▪Install a electricity meter for the indoor units for each tenant ▪Install a electricity meter for the outdoor units/indoor units of each floor ▪Electricity meters that can output a pulse for 1 kWh (1 kWh/pulse) for the power consumed by the air conditioning are recommended. ▪There may be some restrictions on electricity meter installation depending on the property conditions. ▪The electricity charge apportionment calculation does not comply with the laws and regulations of the various countries regarding measurement act.

CONTROL SYSTEM

● Remote management

● 10 VRF network system can be controlled or monitored from 1 remote site.

VRF Network Systems in a maximum of 10 locations can be controlled and monitored from a single remote site. This is optimum for operation of a large company or large shopping mall with multiple facilities on a single site.

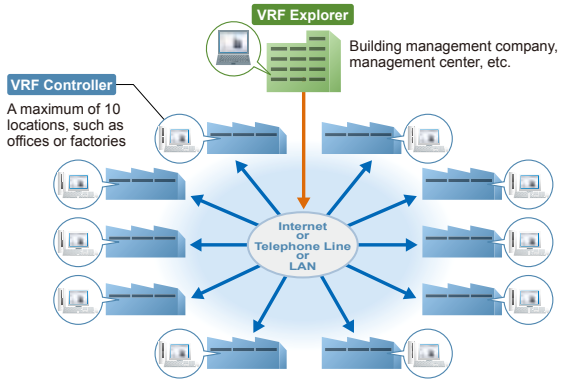

● 1 VRF network system can be monitored from any number of remote sites (Up to 5 simultaneous connections).

The building management company, security company, management center, etc., can use a single VRF system to remotely control, manage, and monitor simultaneously from up to 5 remote sites. This makes it possible to operate the system with high reliability.

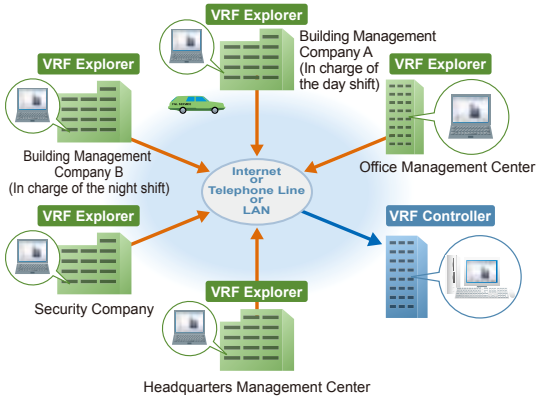

CONTROL SYSTEM

CONTROL SYSTEM

● Energy saving management *1

A variety of energy saving operations can be set and managed depending on the season, weather, and time period.
Excellent energy saving operation is performed while keeping users comfortable.

*1: UTY-PEGX option is necessary.



Energy saving graph data: This graph compares the electricity consumption with the previous month and previous year to make it easy to analyze the energy saving effect.

Energy Saving Management Main Screen

● Peak cut operation

A power meter is connected to detect the total power consumption while shifting the indoor unit set temperature, set the indoor unit forced thermostat off, and taking other measures to carefully control the power consumed while maintaining comfort and conducting control to maintain the target power consumption set for each time. The indoor units to be controlled can be freely grouped and the control level can be set.

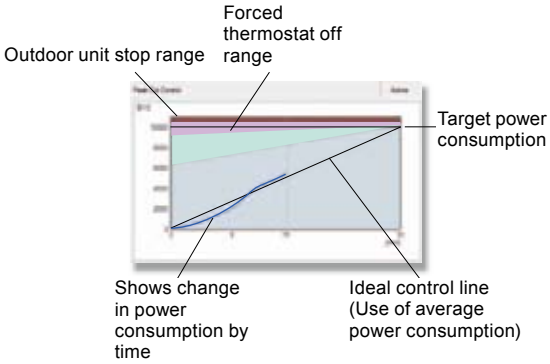

● Outdoor unit capacity save

Outdoor unit capacity save switches the outdoor unit capability upper limit to suppress power consumption during hot summers and cold winters by averaging the power saving effect of each refrigerant system. You can select from 50% or more of the capacity upper limit.

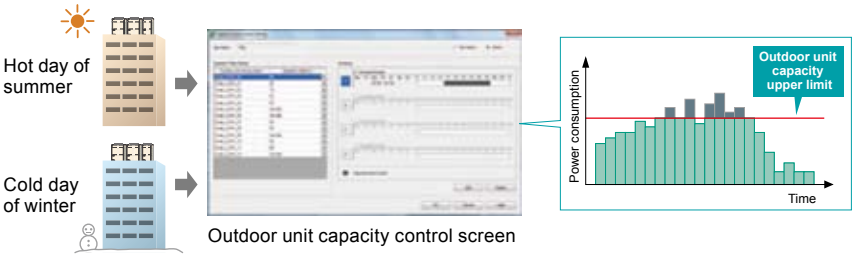

Outdoor unit capacity control screen

● Indoor unit rotation operation

The operation of indoor units can be automatically rotated within a group in accordance with the set annual schedule to reduce power consumption while maintaining comfort. The indoor unit operation stoppage rate can be selected from 10% to 30%.



Indoor unit rotation screen

CONTROL SYSTEM

●Versatile operation support

●Schedule control



- Annual schedules can be set for each remote controller group / user defined group.
- Start / stop, operation mode, remote controller prohibition, and temperature settings can be set up to 144 times per day at 10 minute intervals for up to 101 configurations for each remote controller group.
- Settings can be made for periods straddling midnight.
- Allows programming of special settings for holidays, including public holidays, for a complete year.
- Low noise operation of outdoor unit can be scheduled.

●Error display

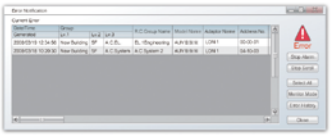

Error is notified with popup message, audible sound and real time e-mail when error occurs.Error for the past 1 year are logged and can be reviewed later.

●Operating & control record

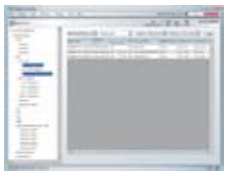

Displays the history of operation status and indications.

●Diverse control of indoor units



- Indoor unit operation state, operation mode, etc. are displayed
- Indoor unit start/stop and operation mode switching Temperature setting, remote controller prohibition, etc. setting.

●Energy saving function



Energy saving operation considering comfort by economy setting, temperature set point limitation, etc.

●Automatic clock adjustment

The time setting of each controller can be set in batch automatically.

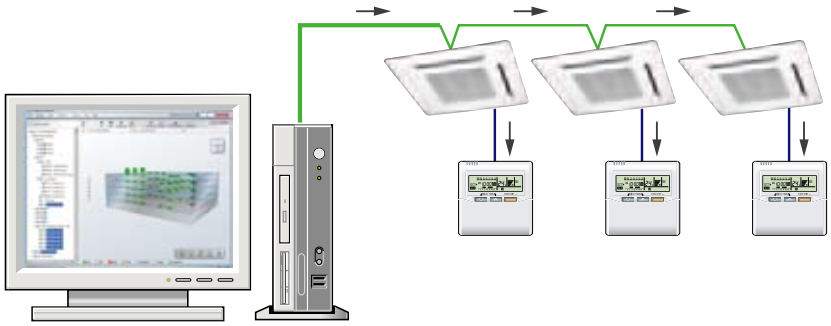

CONTROL SYSTEM

■ SYSTEM DIAGRAM

- System controller may be used on site or remotely over various networks for remote central control.
- System controller consists of VRF Controller software and VRF Explorer software, both softwares are working together.
- VRF Controller software runs in the background and communicate with VRF System.
- VRF Explorer software provides user interface and communicate with the VRF Controller.
- VRF Controller and VRF Explorer softwares may run in a single PC or in different PCs separated by network.
- VRF Explorer software does not require Wibu key.

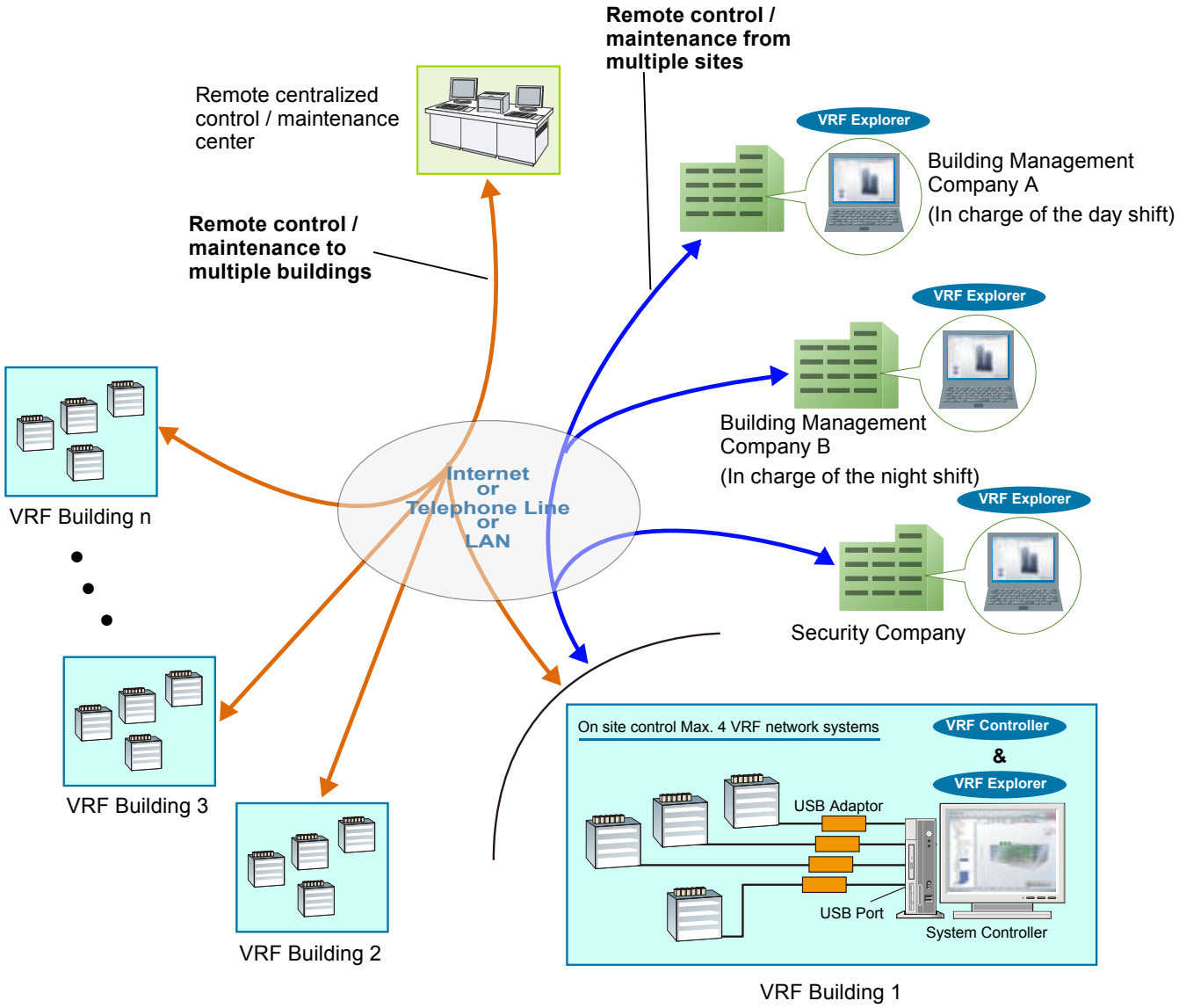

CONTROL SYSTEM

■ PACKING LIST

Name and shape	Quantity	Application
DVD-ROM 	1	Includes the software and manuals for System Controller. Both VRF Controller and VRF Explorer software are included.
Wibu Key (Software protection key) 	1	Software protection key to be inserted in a USB slot running System Controller. System Controller may only run on a PC with Wibu Key. However, Wibu key is not required for remote VRF Explorer software.

■ SOFTWARE CONFIGURATION

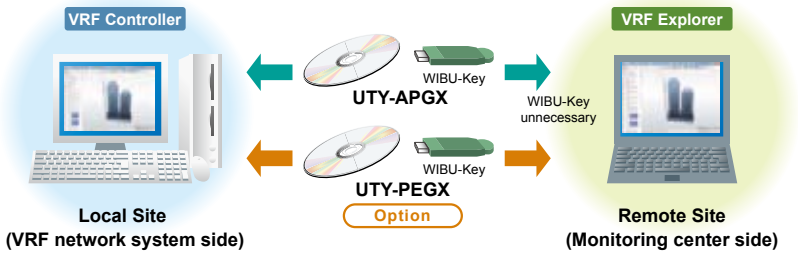

Any number can be installed in remote site personal computers.

System Controller UTY-APGX can be installed in the local site PCs (VRF Controller) connected to the VRF network system and the multiple remote site PCs (VRF Explorer) connected to those computers via the Internet or LAN. Just this single product creates the control, management, and monitoring environment for the customer's properties including remote operation.

*The WIBU-Key is not required for PCs on the remote site side. Some functions, such as equipment registration, and input/output, are not possible on the remote site side.

Optional software to strengthen the energy saving function

Installing the optional UTY-PEGX will strengthen the energy saving management function.

■ PERSONAL COMPUTER SPECIFICATIONS

Operating system	•Microsoft® Windows® XP SP3 (32-bit) Professional (*1) •Microsoft® Windows® Vista® SP2 (32-bit) Home Premium, Business (*2) •Microsoft® Windows® 7 SP1 (32/64-bit) Home Premium, Professional (*2) •Microsoft® Windows® 8 (32/64-bit) Pro (*2) [Supported languages] (*1) English only (*2) English, Chinese, French, German, Russian, Spanish, and Polish
CPU	Intel® Core™ i3 2GHz or higher
Memory	2GB or more (Windows® XP, Vista®, 7 32-bit) 4GB or more (Windows® 7 64-bit, Windows® 8)
HDD	40GB or more of free space
Display	1024 x 768 or higher resolution
Interface	USB port is required for each of the followings for Server PC ; • Wibu Key (Software protection key) • Echelon® U10 USB Network Interface (Required for each VRF Network) Ethernet port is required for remote connection using internet.
Accelerator	Requires the internal graphics accelerator be compatible with Microsoft® DirectX® 9.0
Software required	Adobe® Reader® 9.0 or later
Hardware required	DVD-ROM Drive

■ OPTION AVAILABLE

Energy Manager	UTY-PEGX *1	Additional support for energy saving function and Electricity Charge Apportionment using electricity meter.

■ U10 USB NETWORK INTERFACE SPECIFICATIONS

Product Name : Echelon® U10 USB Network Interface – TP / FT-10 Channel

Model Number: 75010R

CONTROL SYSTEM

■ SPECIFICATION SUMMARY

Type		Function	UTY-APGX	UTY-PEGX *1 Option	Remark
System specification		Max. System Controller per VRF Network	1	—	
		Max. VRF networks supported	4	—	Site with up to 4 VRF networks may be administered with 1 System Controller
		Max. indoor units / remote controller groups per VRF network	400	—	
		Max. indoor units / remote controller groups per System Controller	1,600	—	4 VRF networks
Site supervision		Multiple sites display	10	—	
		2D/3D graphical layout view	●	—	2D: Site, floor, 3D: Building Quick control from display available.
		List display	●	—	Quick control from display available.
		Tree display	●	—	Quick control from display available.
Operation control	Individual	Start/Stop, Operation mode, Room temperature	●	—	
		Fan speed, Air flow direction	●	—	
		Economy mode	●	—	
		Antifreeze	●	—	
		Remote control prohibition setting	●	—	
		Temperature upper and lower limit setting	●	—	
		Filter sign reset	●	—	
	Schedule	Annual schedule	●	—	Week of year, day of month, day of week setting. Holiday special day settings.
		Low noise mode weekly schedule	●	—	Outdoor unit control only.
	Group management	Number of groups	1,600	—	
		Group in group	3 Levels	—	Lv.1 – 2 – 3.
		Max. overlap definitions	1,600	—	1 unit may belong to up to 1,600 groups.
		Auto generation	●	—	By site, building and floor.
	Others	Memory operation	●	—	Operation pattern memorized and reused.
		Pattern operation	●	—	Reuse operation pattern once used.
Operation status monitoring		Controlled status	●	—	See items controlled by operation.
		Special operation	●	—	Defrost, Oil Recovery.
Error management		Error notification	●	—	
		Audible alarm	●	—	
		Error e-mail notification	●	—	
History management		Error history	1 year	—	
		Operation control & status history	1 year	—	
Energy saving management		Indoor unit rotation	—	●	
		Outdoor unit capacity save	—	●	
		Peak cut control	—	1 month	
		Power consumption monitor	—	●	
		Electricity meters supported	—	200	Outdoor unit required per connection
		Power consumption information	—	3 years	
Electricity charge apportionment		Apportionment charge calculation	●	—	
		Apportionment charge bill creation	●	—	
		Tenant (block) setting	1600	—	
		Common facilities apportionment setting	●	—	
		Rated power consumption allotment setting	●	—	
		Electricity meters supported	—	200	Same meters used for energy saving.
		Electricity charge apportionment period	2 years	—	
Remote control		Internet, telephone line support	●	—	
		Max. client connection per server	5	—	
		Max. host connection from client	10	—	
		Data encryption	●	—	SSL used.
Others		User control	●	—	Authorization level setting.
		Database import / export	●	—	
		Multiple language display	●	●	English, Chinese, French, German, Spanish, Russian, Polish.
		Floor layout editor	●	—	
		Floor layout import/export	●	—	

Note: The S, V, VR-II, V-II, J-II series are supported, but with the S and V series, there are some functions that cannot be used, such as energy saving function and electricity meter use.

*1:Energy saving software (UTY-PEGX) is available for the indoor units and the outdoor units with revision code B or later.

∗The electricity charge apportionment function of VRF system can only be performed from one equipment simultaneously.

CONTROL SYSTEM

2-2. TOUCH PANEL CONTROLLER

■ MODEL : UTY-DTG∗



- Large-sized 7.5-inch TFT color.
- LCD easy finger touch operation.
- Stylish shape and design to suit all application.
- No additional component is required for installation.
- Up to 400 indoor units can be controlled.
- Selectable 2 display types (Icon / List) in monitoring mode
- Corresponds to 7 different languages like, English, Chinese, French, German, Spanish, Russian, Polish.

■ FEATURES

● Easy operation

- Wide range of simple-to-understand icons.
- Operation can be selected using your finger or the dedicated touch pen by pressing the appropriate on-screen icon.
- Up-to-date status display.
- Background color identifies current control operation blue for monitoring, green for operational control.

● Function



Individual control



Flexible grouping



Schedule control



Indoor units operation monitoring

● Automatic clock adjustment

The time setting of each controller can be set in batch automatically.

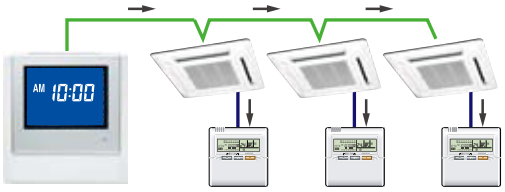

CONTROL SYSTEM

● Versatility

- Emergency stop function
  Air conditioner can be turned off through the external input control.
- The stored data can be transferred via USB port.
- CSV format data* edited by PC can be imported to Touch Panel Controller.

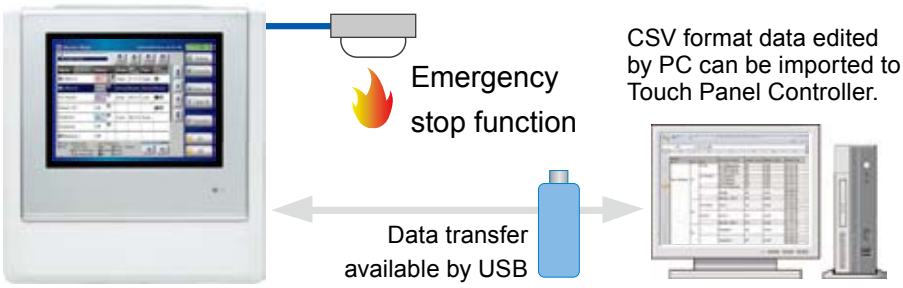

* File making sheet is included in CD-R.

● Easy installation

- Touch Panel Controller is easily mounted to the wall.
- Flat back surface allows to be installed wherever it is needed.
- No additional component is required for installation.



CONTROL SYSTEM

■ FUNCTIONS

No.	Item		Description
1	Installation	Language setting	Design considering multi-language correspondence. *1
		Indoor unit registration	Indoor unit registration. Max 400 units. (Set data can be written to and read from USB memory)
		Functions setting	Temperature set point limitation, external input, central operation on/off setting.
2	Monitor	Display switching	Icon display, list display
		Display units	ALL, group, individual (remote control group)
		Monitor contents (icon display)	Group name, operation, operation mode, set temperature, time, errors, timer setting, filter sign
		Monitor contents (list display)	Group name, operation, operation mode, set temperature, air flow, air direction, special operation, anti-freeze, time, errors, timer setting, filter sign
		Error list	Group name, remote control group name, address, error code
		Special state	Display during special operation
3	Control	Control units	ALL, group, individual (remote control group)
		Control contents	Operation, operation mode, set temperature, air flow, RC Prohibition, filter sign reset
		Detailed control contents	Air direction, energy saving, anti-freeze, test run
4	Setting	Date and time	Time display switching, year/month/day display switching, system clock setting, summer time
		Panel cleaning and correction	Select display area for panel cleaning. User can select black screen on display.
		Group	Stages: Max. 3 stages Settable up to 400 groups. (Set data can be written to and read from USB memory)
		Background light and beep sound	Backlighting off time and brightness setting, BEEP sound operation setting
		Password	Management level: 3 kinds
		Schedule timer	Max 30 items settable
		Temperature range	Celsius/Fahrenheit switching, cooling, heating, and AUTO each settable.
5	Maintenance	Error history	Recording of max 10 errors each for touch panel controller and each unit (indoor unit, outdoor unit)
		Status history	Recording of max 100 operations each for each indoor unit. Writable to USB memory.
		Operation history	Recording of max 100 operations. Writable to USB memory.
		Version display	Version display
6	Others	External input/output	Input: Batch operation/stop, emergency stop Output: Operation monitoring, error

*1 : Product specifications are subject to change without notice.

∗ When Start/Stop, operation mode setting, room temp. setting, fan speed setting, air flow direction setting, swing setting, economy mode, and anti freeze setting are changed frequently by using the central controller like System Controller, Touch Panel Controller, etc. or from Building Management System (BMS) via BACnet Gateway or via Network Convertor, the number of operations for each indoor unit must not exceed 7,500 times/year.

If the number of setting change exceeds the above specified number, the rewriting count limit of the non-volatile memory (memory built into the air conditioner and used for recording settings) will be exceeded, and may cause breakdown.

CONTROL SYSTEM

■ STATE TRANSITION DIAGRAM

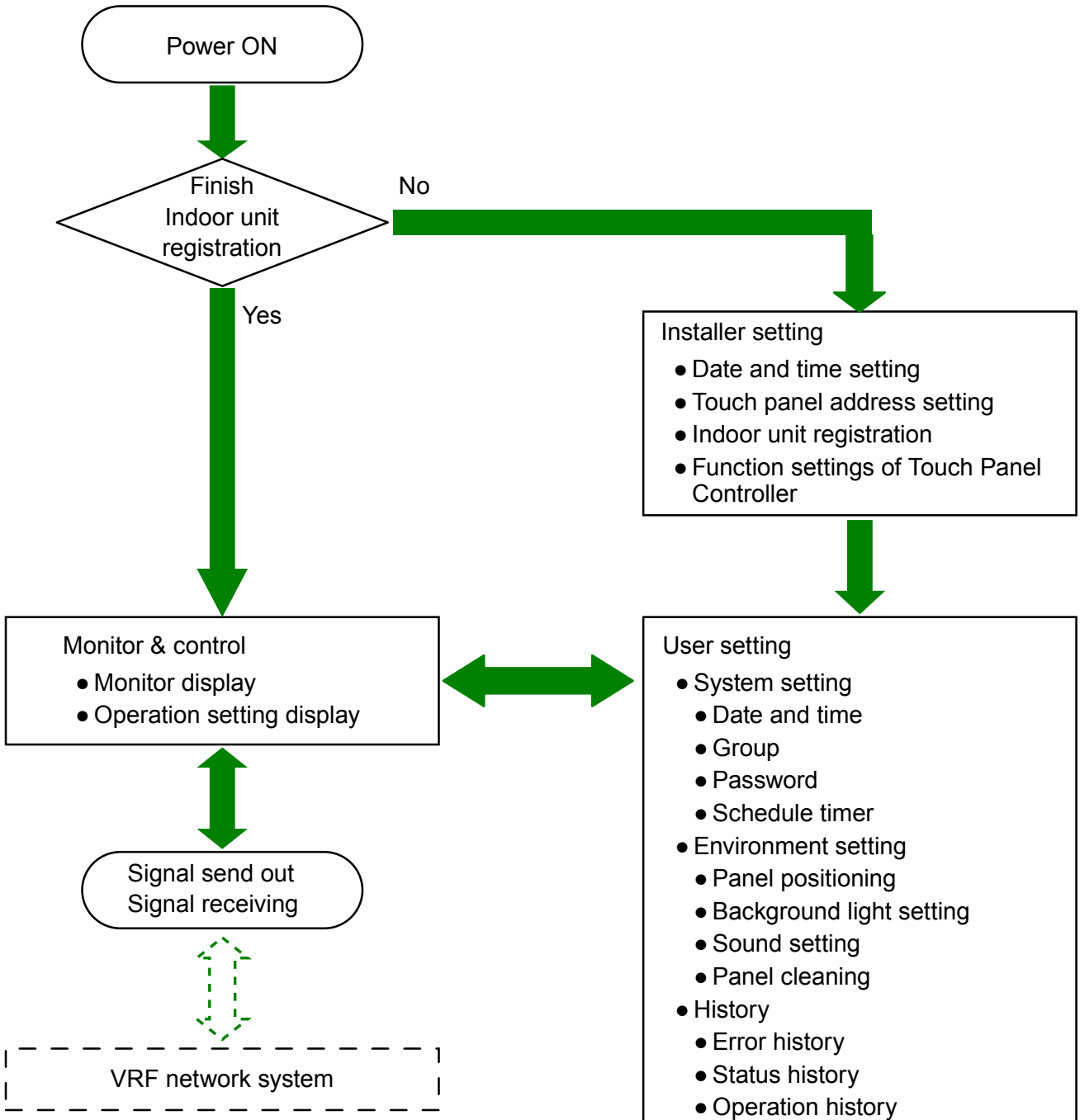

CONTROL SYSTEM

■ MAIN FUNCTIONS AND SCREEN EXAMPLES

● Monitor display example

An easy-to-use display mode can be selected.

Easy-to-understand GUI of adopted icon.

Icon display



List display example

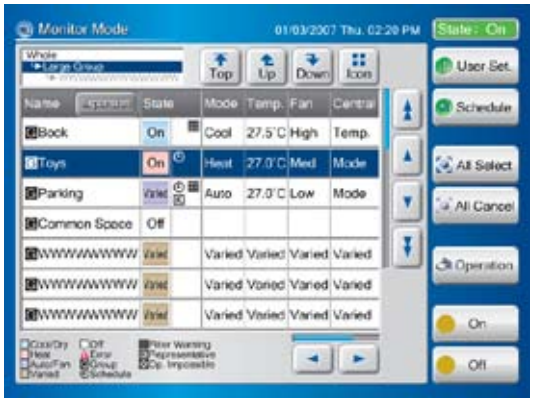

● Operation setting example

Large button is designed for easy to access.

Operation setting display



Optional setting display

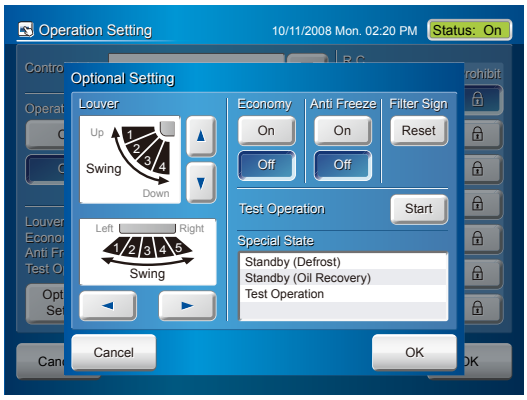

CONTROL SYSTEM

● Group setting

Groups can be arbitrarily set in easy to manage units as shown in the figure.
Control and monitoring are performed in these group units.

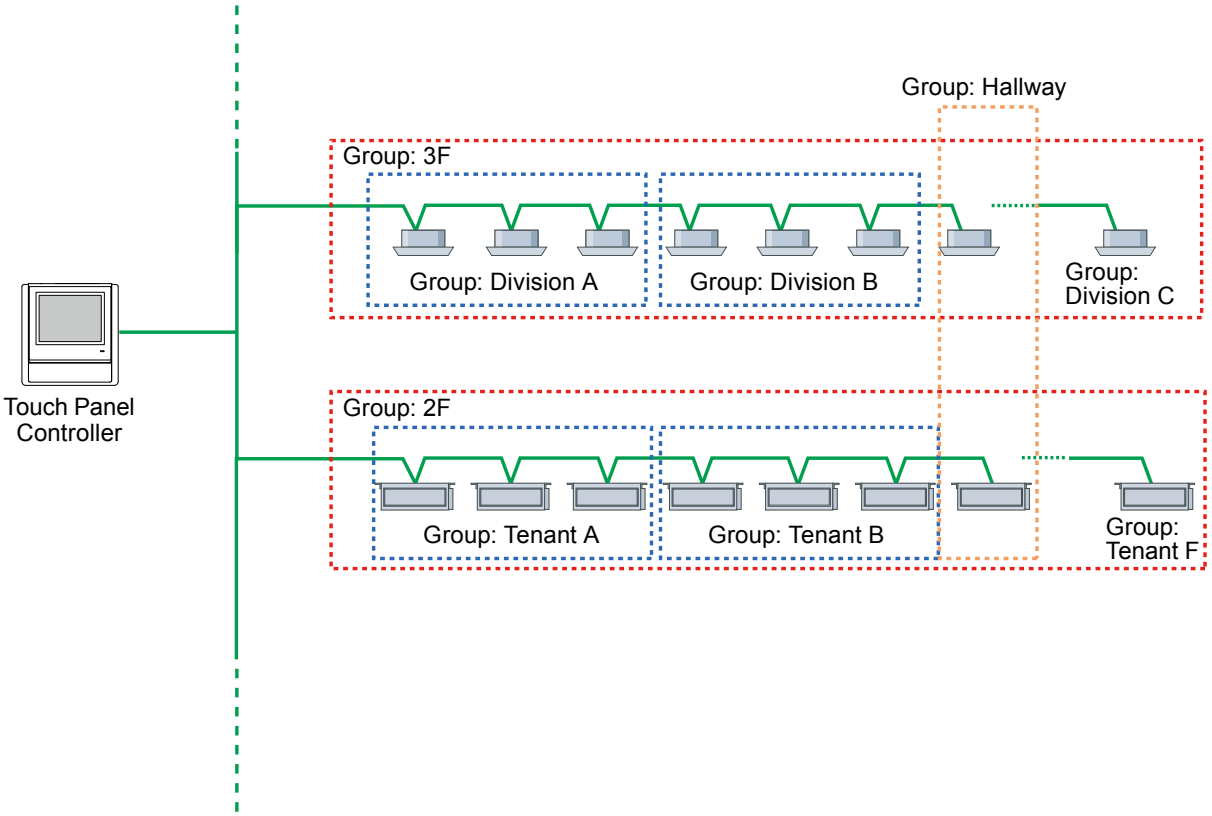

Group setting screen



CONTROL SYSTEM

● System schedule timer

Annual schedule can be set of a maximum 30 items.

Schedule setting screen



● History recording and display

Error, status and operation histories can be recorded. Each recording can be also written to USB memory.

- Error history: Max 10 items each recorded for touch panel controller and each unit (indoor unit, outdoor unit)
- Status history: Max 100 operations each recorded for indoor unit of each room
- Operation history: Operation of max 100 operations recorded

Optional history screen



CONTROL SYSTEM

■ INSTALLATION

● Installation space

When installing Touch Panel Controller in a row, keep the space shown below from the surrounding projecting parts.

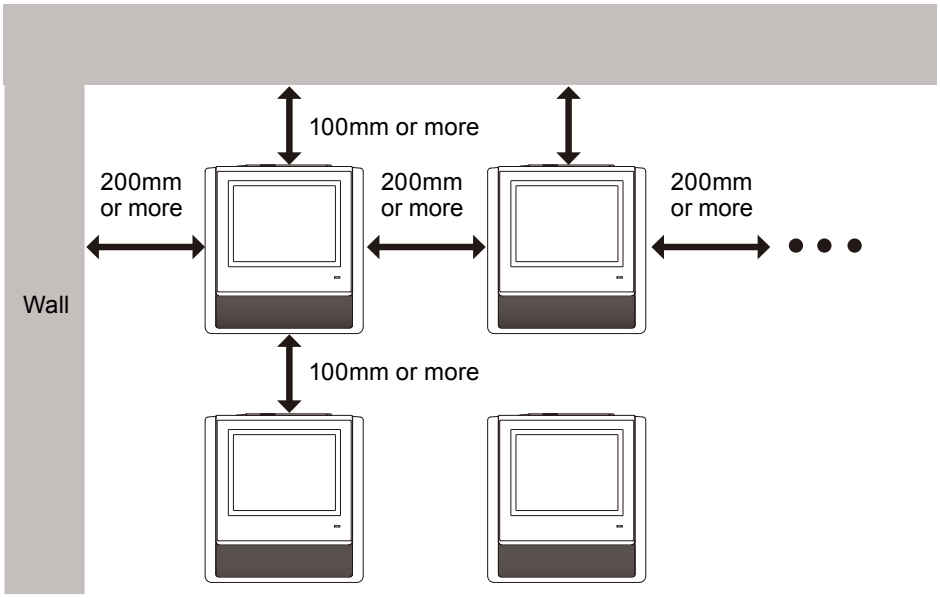

Note: The switchbox that Touch Panel Controller is to be mounted to should be installed horizontally in advance.

● Caution

Following installation position is prohibited.

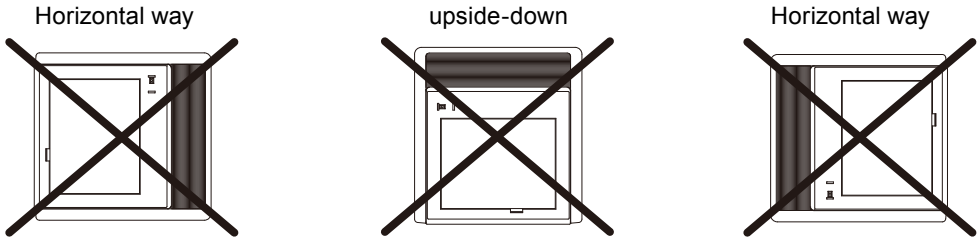

CONTROL SYSTEM

● Terminal names

Names of connection terminals inside rear cover.

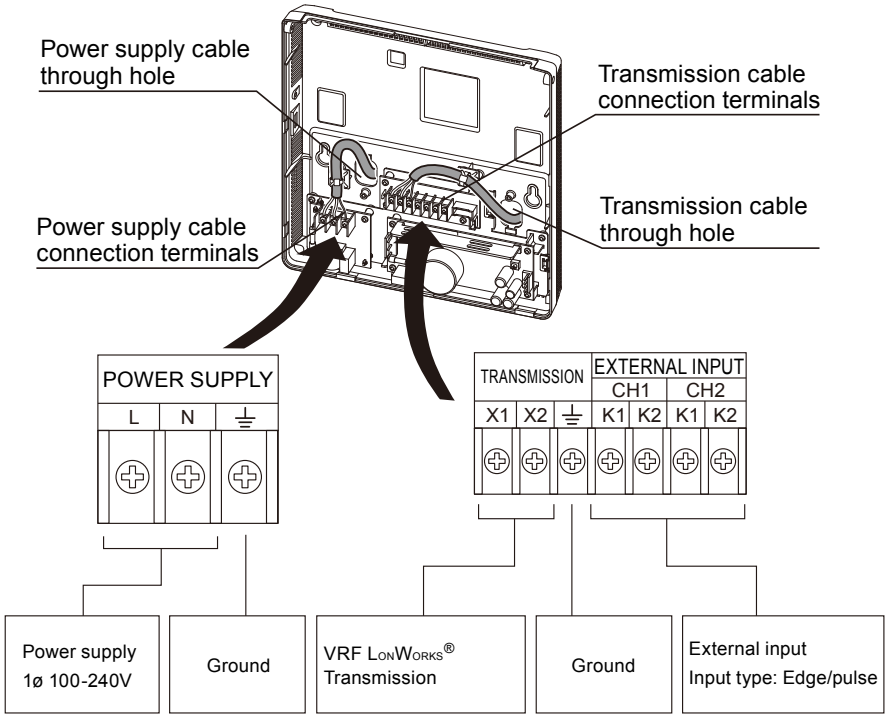

● External input terminals

External input terminals are prepared for all ON/OFF and Emergency stop commands.

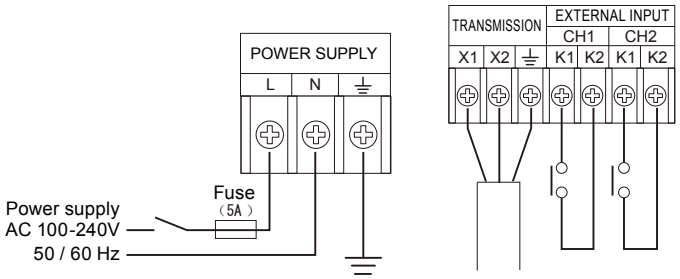

CONTROL SYSTEM

● Installation method

Please refer to an installation manual for the details.

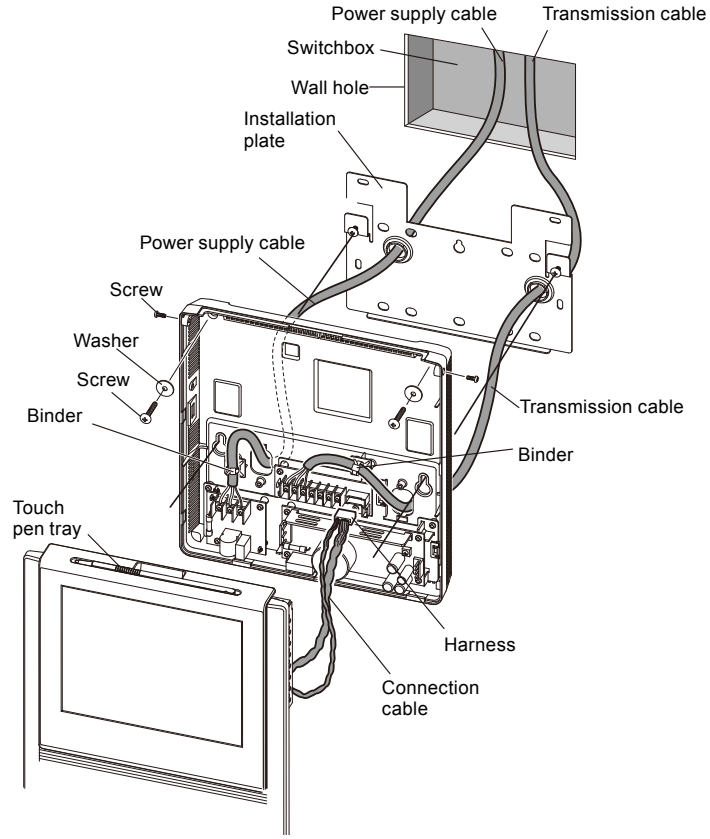

CAUTION: In advance install a switchbox to the wall where the touch panel controller is to be installed.

● The diagram of the mounting plate screw hole positions

(Unit : mm)

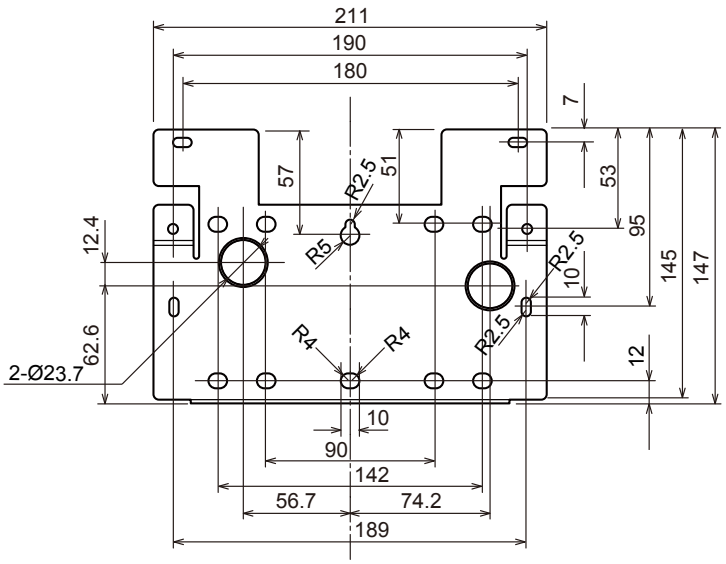

CAUTION: Refer to the mounting screw hole positions of the switchbox that is to be installed in advance and check the compatibility.

CONTROL SYSTEM

■ DIMENSIONS

(Unit : mm)

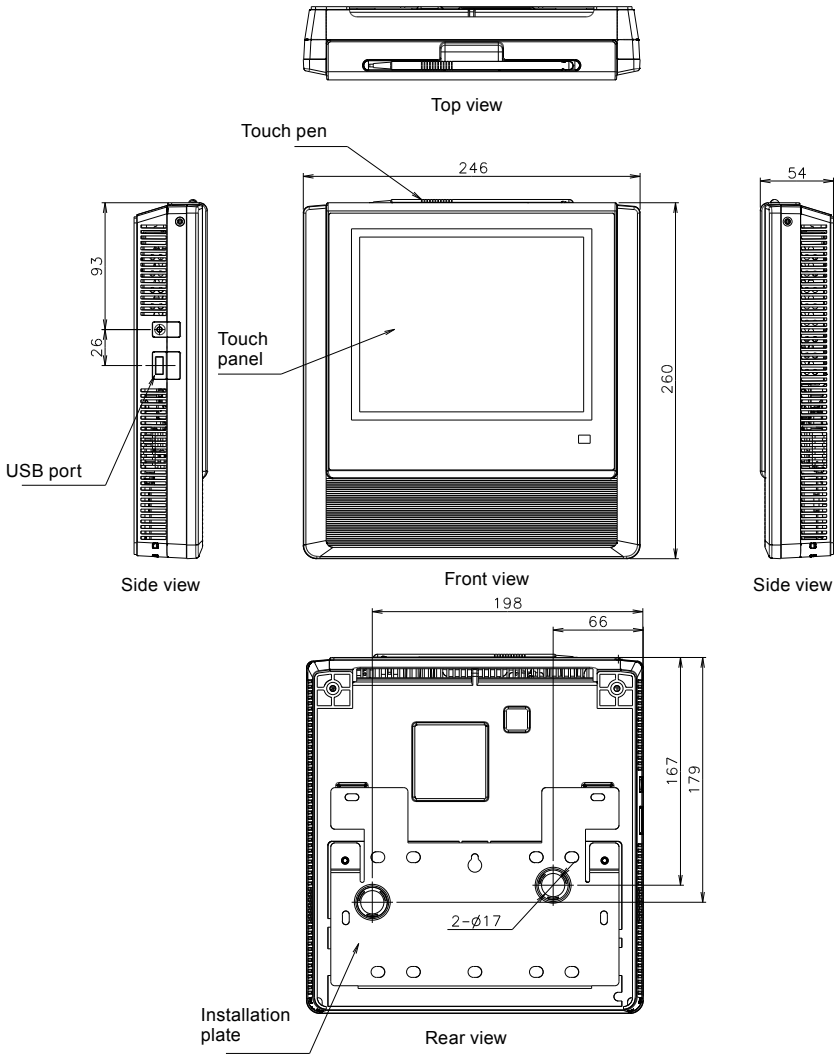

■ PACKING LIST

Name and shape	Quantity	Application
Installation plate	1	For Touch Panel Controller installation (It is attached to the back of the Touch Panel Controller)
Screw	8	Screw for Touch Panel Controller installation (M4 x 20mm)
Washer	8	Washer for Touch Panel Controller installation
Touch pen	1	Pen for Touch Panel Controller operation
Binder	4	Prevents dropping off of the cable
CD-R	1	Includes the operating manual and file making sheet of this controller
Installation manual	1	
Operation manual	1	

CONTROL SYSTEM

■ WIRING SPECIFICATIONS

Use	Size		Wire type	Remarks
Power supply cable	Maximum	1.25mm^2	245 IEC 57 or equivalent	1 ø AC100 - 240 V 50/60Hz, 2 Wire + ground (Always ground the unit)
	Minimum	0.5mm^2		
Transmission cable	0.33mm^2 (22AWG)		LEVEL4 (NEMA) non-polar 2 core, twisted pair solid core Shielded	LONWORKS compatible cable
External input / output cable	0.33mm^2 (22AWG)		Polar 2core, Twisted pair	Use shielded cable in accordance with the regional cable standard.
Fuse capacity	5A			

■ SPECIFICATIONS

Model name	UTY-DTG∗
Power source voltage (V)	1 ø AC 100 - 240
Power source frequency (Hz)	50 / 60
Input Power (W)	22
Display	7.5-inch TFT color LCD display (640 x 480 pixels), with Touch panel
LED indicator	Power LED (Green)
External interface	USB 2.0
	Transmission line
	EXT IN: (Either emergency stop or batch operation/stop) (Either Dry contact or Apply voltage can be selected)
	EXT OUT: (Operation state, error state)
	Reset SW
Usage temperature range (°C)	0 to 40
Usage humidity range (%)	0 to 85 (no condensation)
Storage temperature range (°C)	-20 to 70
Storage humidity range (%)	0 to 85 (no condensation)
Dimensions [H x W x D] (mm)	260 x 246 x 54
Weight (g)	2150

CONTROL SYSTEM

2-3. CENTRAL REMOTE CONTROLLER

■ MODEL : UTY-DCG∗



- Individual control and monitor of 100 indoor units.
- 5 inch TFT color screen.
- User friendly view and easy operation.
- External input / output contact.
- Detachable power supply unit.
- Corresponds to 7 different languages (English, Chinese, French, German, Spanish, Russian, Polish)

■ FEATURES

● User friendly operation

- Operation status monitor displays for all indoor units. (Max. 100 units)
- Easy comprehensible display and operation button.

Function Menu

Function menu displays the items to select.



● System overview

- Allows multiple indoor units grouping (Max.16 groups controlled).
- Interlock with external device.

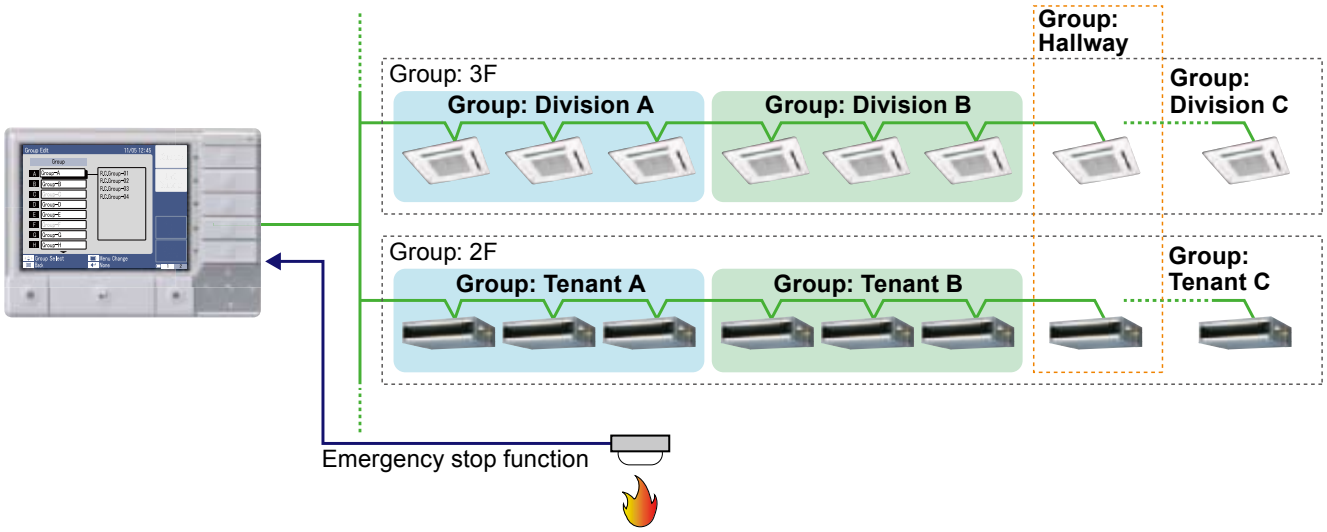

● Easy installation

- The control panel and power supply unit can be installed separately.
- For flexibility in installation, the Control panel can be built into the wall or fix on the wall.

Setting pattern 1

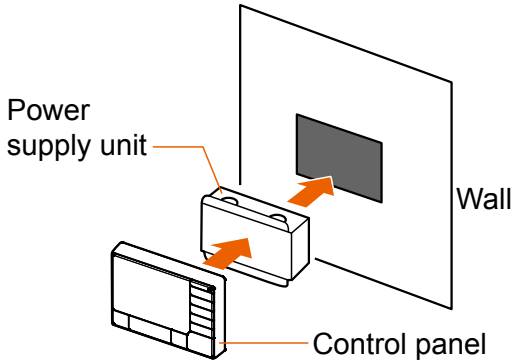

Control panel + Power supply unit

Setting pattern 2

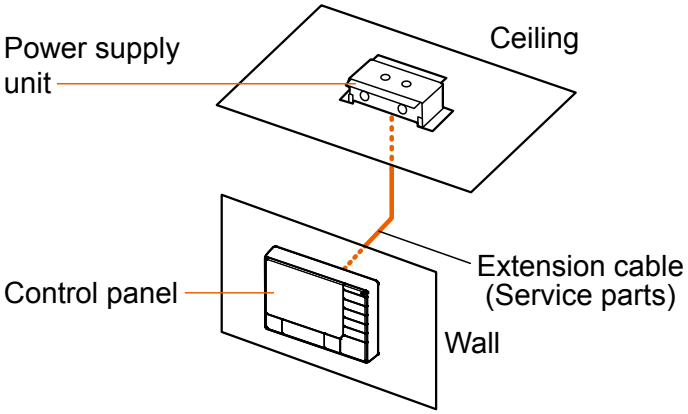

- Automatic or manual indoor unit registration

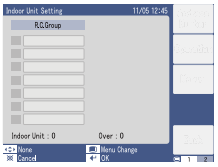

Indoor unit registration start

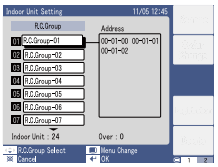

Indoor unit registration finish

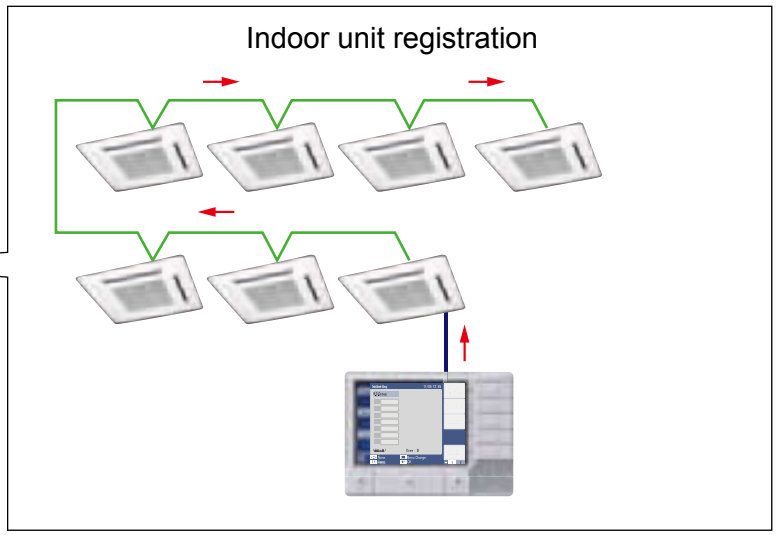

CONTROL SYSTEM

■ FUNCTIONS

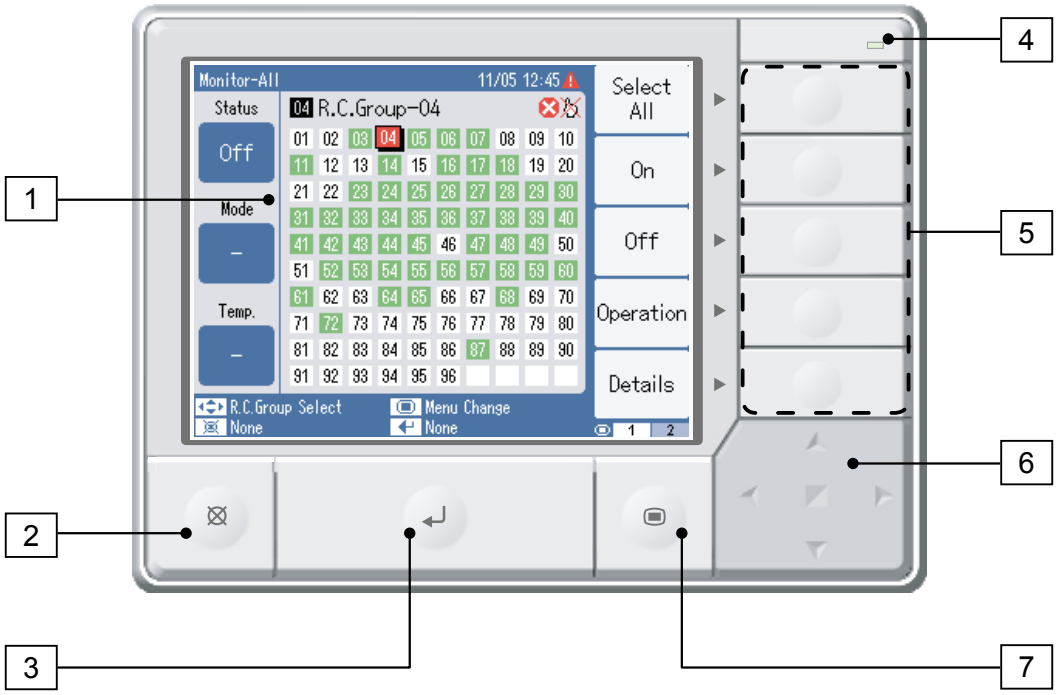

1	LCD display	4	LED lamp
2	[CANCEL] button	5	Function buttons
3	[OK] button	6	[Arrow] button
		7	[MENU] button

■ MAIN FUNCTIONS AND SCREEN EXAMPLES

● Individual control

(On / Off, Mode, Set Temp, Fan Speed, Air Flow Direction, Anti Freeze, Economy)

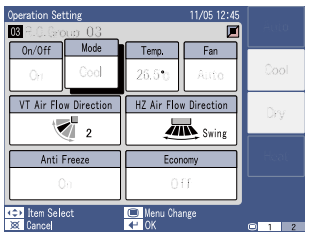

● Remote controller prohibition

(All, On / Off, Mode, Temp, Timer, Filter):

R.C prohibition setting prohibits individual remote control operation from this controller

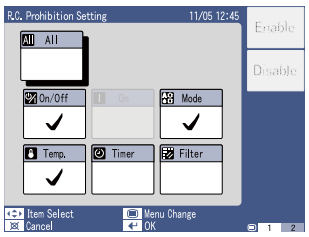

● Room temperature set point upper and lower limitation

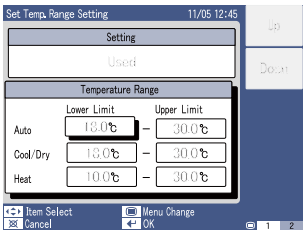

● Weekly timer

Weekly timer can set the timer by various combinations.

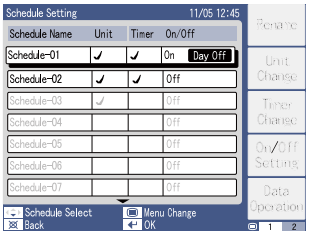

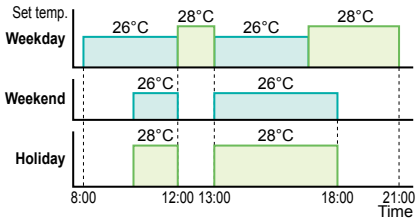

● Automatic clock adjustment

The time setting of each controller can be set in batch automatically.

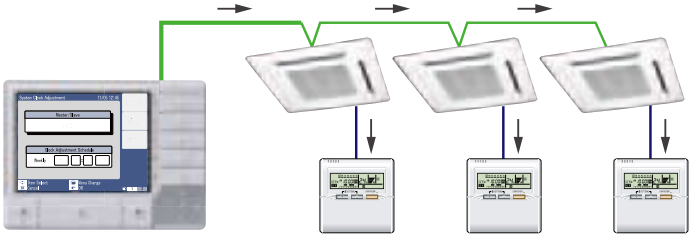

● Error history

- Max 200 Errors memorize.
- Suitable maintenance is possible by analysis of the error history data.

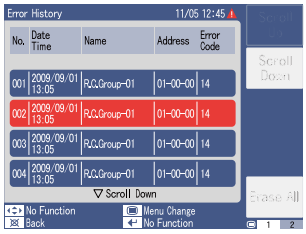

● Main screen display auto switching

Main Screen automatically switches at 5 steps by the number of connected indoor units.

	1	2	3	4	5
Number of connected indoor units	1 to 9 units	10 to 20 units	21 to 40 units	41 to 80 units	81 to 100 units
Display pattern	9 units display	20 units display	40 units display	80 units display	100 units display

● 9 / 20 units display pattern

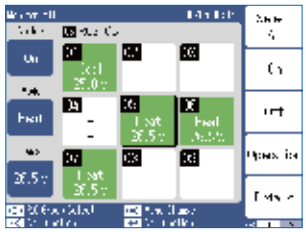

● 40 / 80 / 100 units display pattern



CONTROL SYSTEM

■ INSTALLATION

● Installation space

Make a service space to perform installation work.

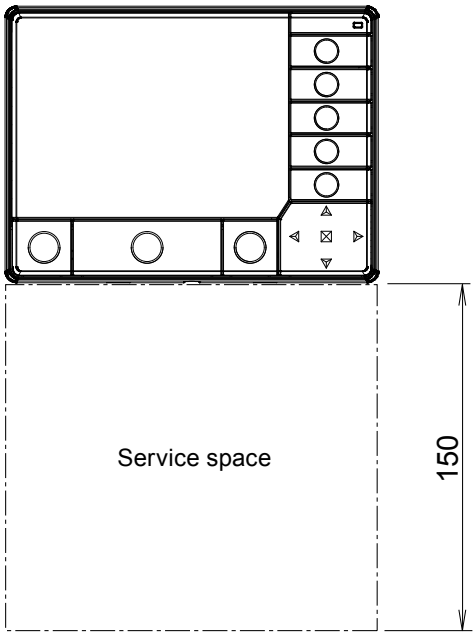

● Terminal names

● Power supply unit

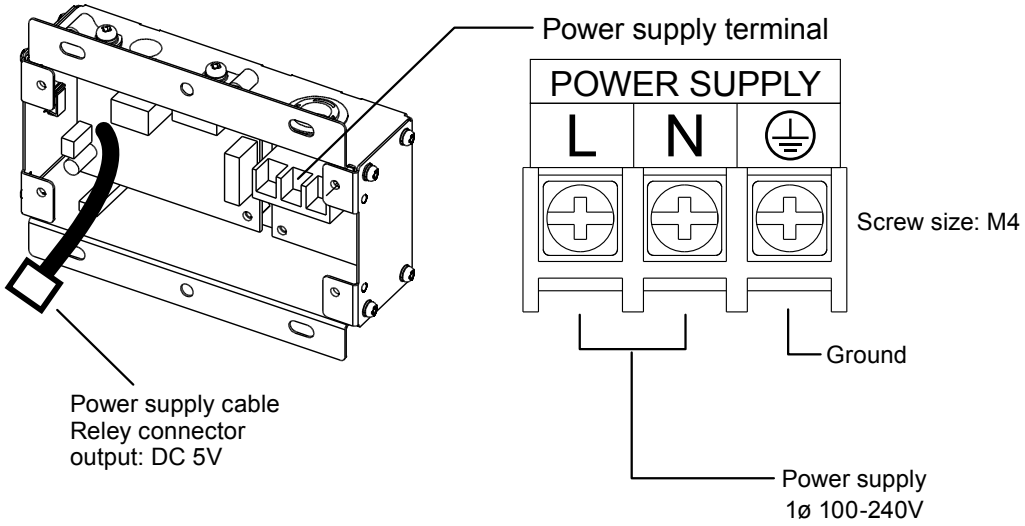

● Remote controller unit

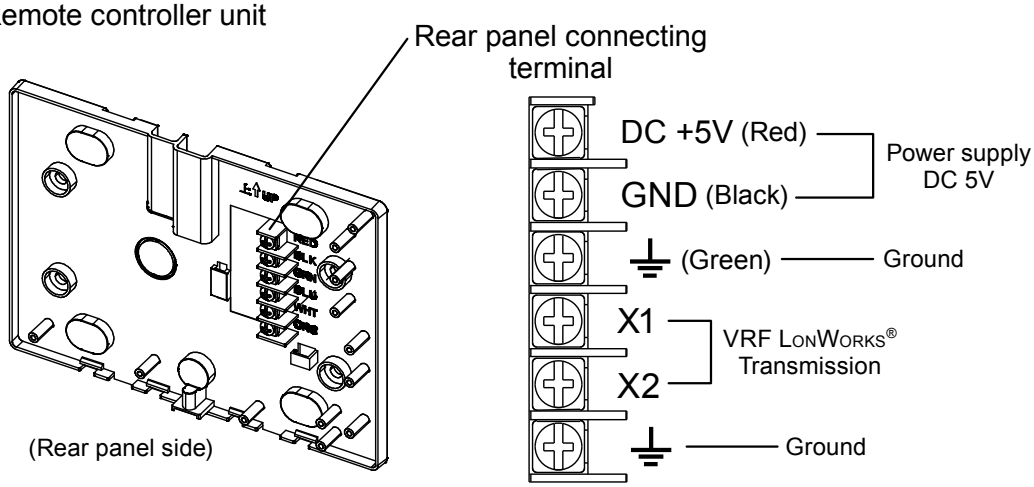

● Installation method

Setting pattern 1: Integrated type

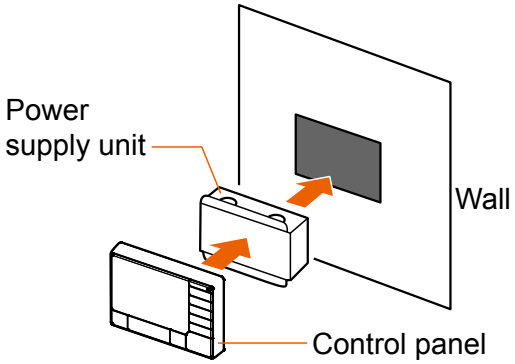

Setting pattern 2: Separate type

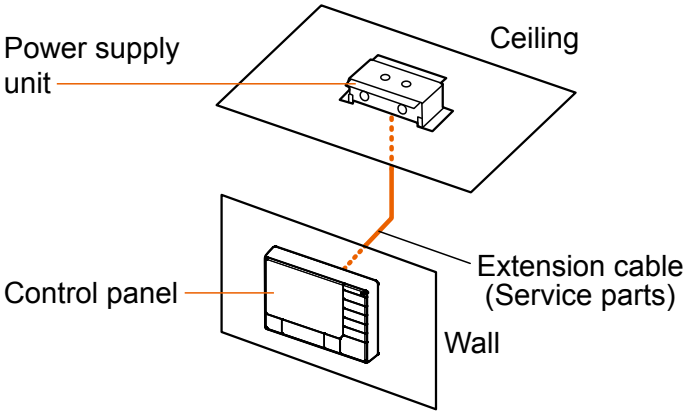

● **Integrated type**

Please refer to an installation manual for the details.

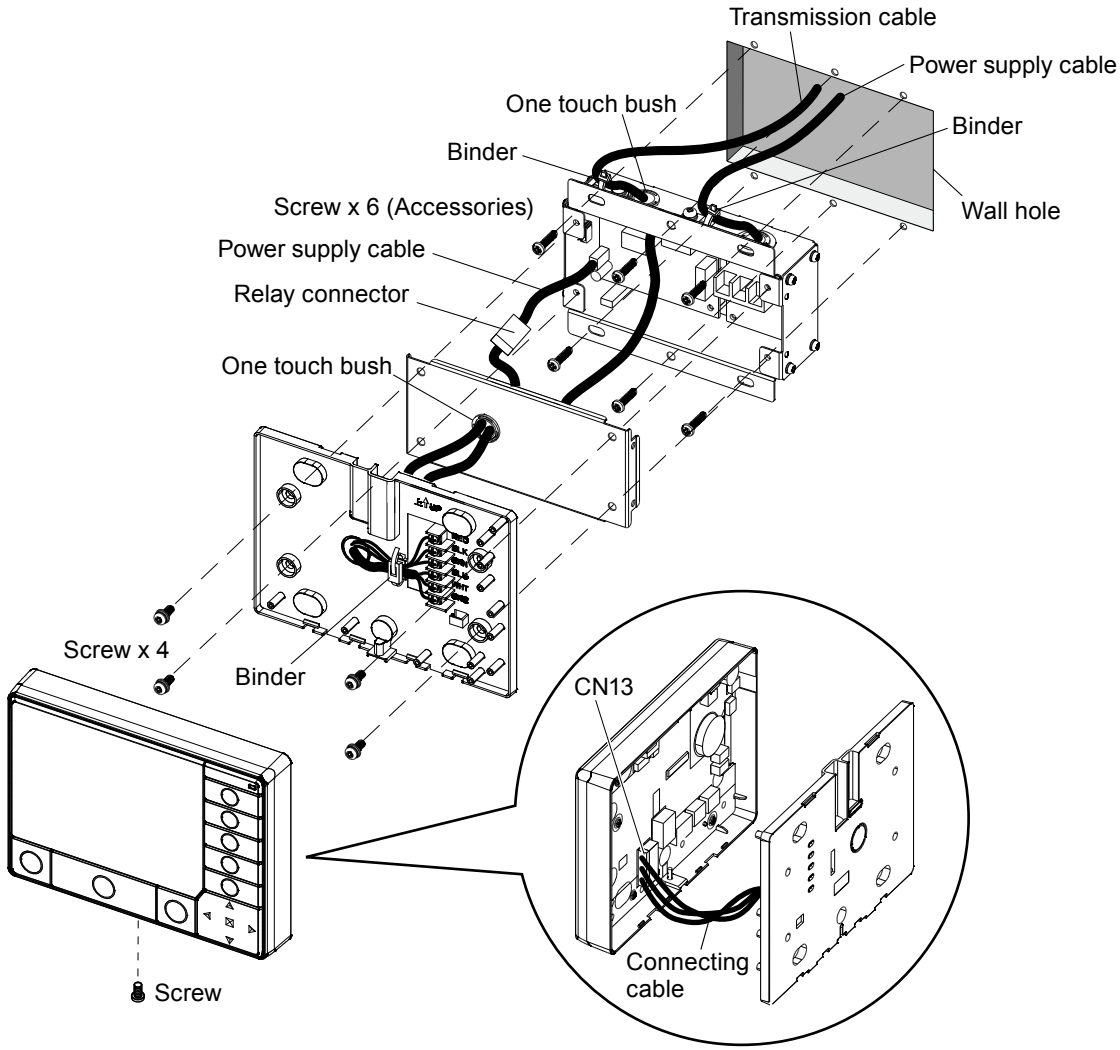

CONTROL SYSTEM

● **Separate type**

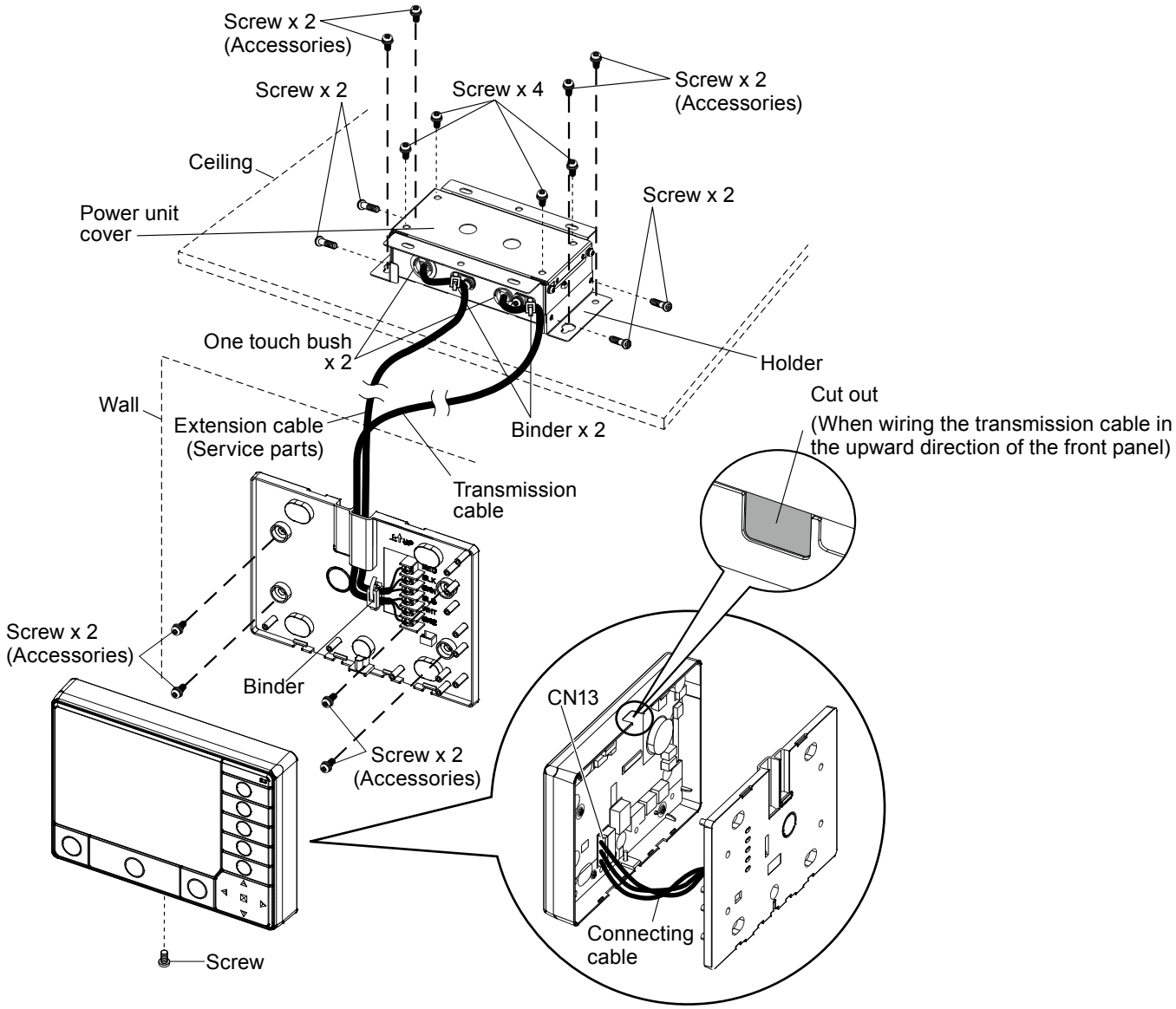

● The diagram of the mounting plate screw hole positions

(Unit : mm)

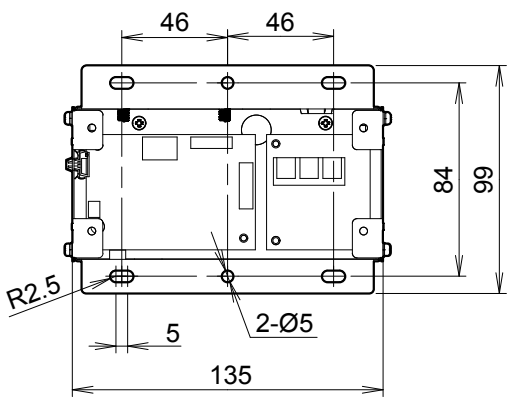

■ DIMENSIONS

(Unit : mm)

● Control unit

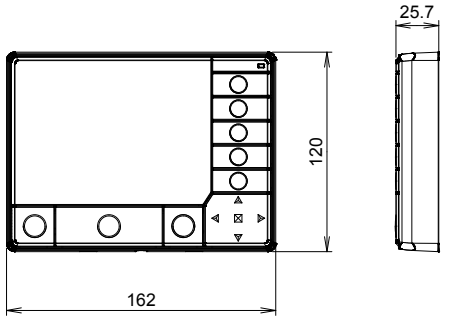

Front view

Side view

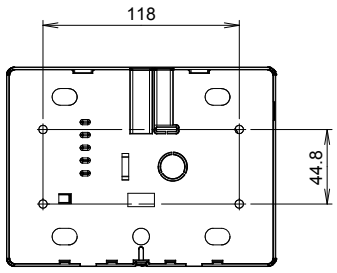

Rear view

● Power supply unit

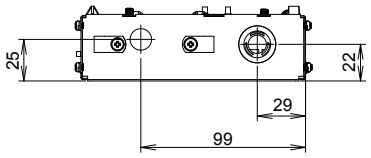

Top view

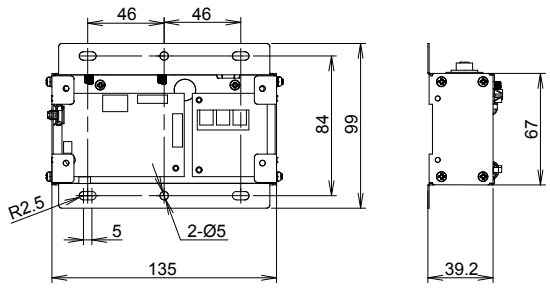

Front view

Side view

■ PACKING LIST

Name and shape	Quantity	Application
Controller unit 	1	
Power supply unit 	1	
Holder 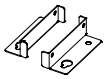	1 (Set)	For power supply unit installation (Used for separate type)
One-touch bush 	2	For protection of power supply unit cable
Screw 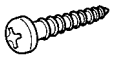	8	Screw for Central Remote Controller installation (M4 x 20mm)
Connecting cable 	1	For power supply unit connection
Binder 	4	Prevents dropping off of the cable
CD-R 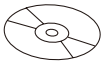	1	Includes the operating manual for Central remote controller
Installation manual 	1	
Operation manual 	1	Instruction book for operation

CONTROL SYSTEM

■ WIRING SPECIFICATIONS

Use	Size		Wire type	Remarks
Power supply cable	Maximum	1.25mm^2	245 IEC 57 or equivalent	1 ø AC100 - 240 V 50/60Hz, 2 Wire + ground (Always ground the unit)
	Minimum	0.5mm^2		
Transmission cable	0.33mm^2 (22AWG)		LEVEL4 (NEMA) non-polar 2 core, twisted pair solid core Shielded	LONWORKS compatible cable
External input / output cable	0.33mm^2 (22AWG)		Polar 2core, Twisted pair	Use shielded cable in accordance with the regional cable standard.
Fuse capacity	5A			

■ SPECIFICATIONS

Model name		UTY-DCG∗
Power source voltage (V)		1 ø AC 100 - 240
Power source frequency (Hz)		50 / 60
Input Power (W)		3
Display		5.0-inch TFT color LCD display (QVGA)
External interface		Transmission line
		EXT IN: (Either emergency stop or batch operation / stop) (Either Dry contact or Apply voltage can be selected)
		EXT OUT: (Operation state, error state)
Usage temperature range (°C)		0 to 40
Usage humidity range (%)		0 to 85 (no condensation)
Storage temperature range (°C)		-20 to 70
Storage humidity range (%)		0 to 85 (no condensation)
Dimensions (mm) [H x W x D]	Control unit	120 x 162 x 25.7
	Power supply unit	99 x 135 x 39.2
Weight (g)	Control unit	308
	Power supply unit	355

■ OPTIONAL SERVICE PARTS

Please use the parts number shown below to order the cable from your sales representative.
Use the shielded type conncetion cable in accordance with the standard of the country.

Name and shape	Type	Parts No.
Extension cable (5m) 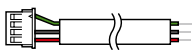	Shielded	9708798011

CONTROL SYSTEM

2-4. GROUP REMOTE CONTROLLER

■ MODEL : UTY - CGG∗

■ FEATURES

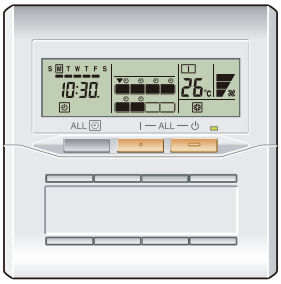

- Control and monitoring of up to 8 remote controller groups is possible with one group remote controller.
- The optional network convertor (Model name: UTY-VGGXZ1) allows up to 4 Group Remote Controllers to be incorporated within the control layout. This flexibility is ideal for a number of different building sizes, types and applications.
- Up to 64 group remote controllers (with 16 network convertors UTY-VGGXZ1) can be connected in one VRF network system.
- Start/Stop, operation mode, set temperature, timer control and fan speed can be controlled / monitored centrally or individually.
- Easy installation with a slim shape with no bulge in the back.
- One-touch Start/Stop operation of each indoor unit is possible. All the indoor units can also be easily operated by pressing an ALL ON, ALL OFF, or ALL TIMER ON/OFF button.

● High performance and compact size

Start/Stop, operation mode, set temperature and fan speed can be controlled / monitored centrally or individually.

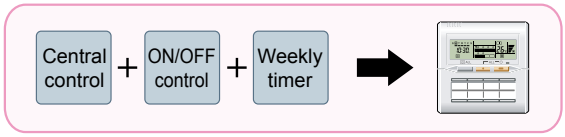

● Built-in weekly timers

The WEEKLY TIMER is provided as a standard function.

- The timer can be set up for up to 4 times/day. (Start/Stop, operation mode, set temperature)
- Allows separate settings for each day of the week.

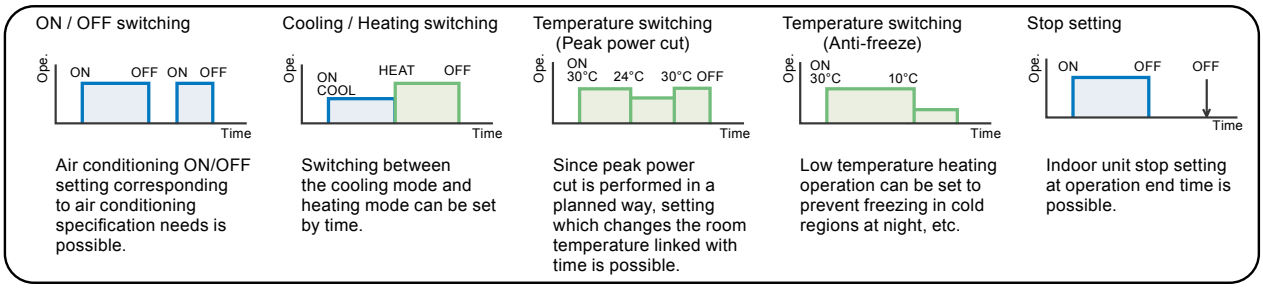

● Control up to 8 remote controller groups

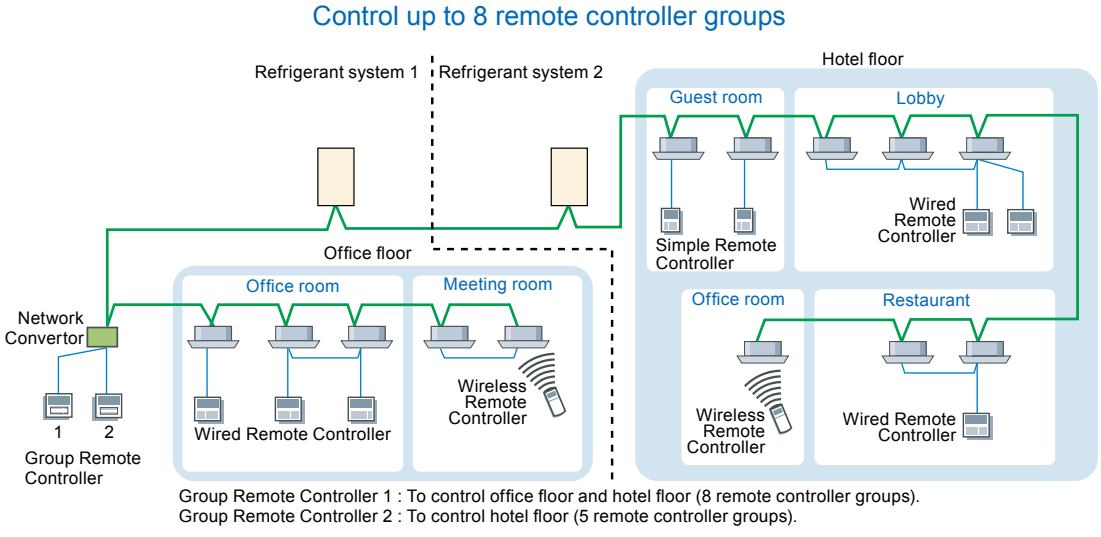

CONTROL SYSTEM

■ FUNCTIONS

1 Timer setting at all the connected indoor units is possible by centralized timer on the front panel.

2 All the connected indoor units can be turned on / off simultaneously by centralized ON/OFF button on the front of the cover.

3 The indoor unit can be quickly turned on and off by ON / OFF button of each indoor unit on the front of the door.

With cover closed

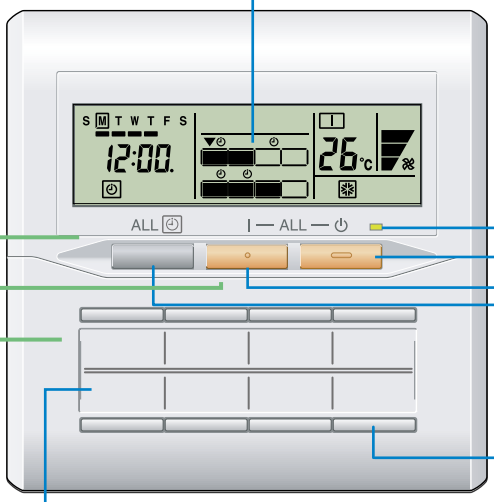

Indoor Unit Operation Indicators

Timer setting at all the connected indoor units is possible by centralized timer on the front panel.

■ : On □ : Off
● : Timer operation ▼ : Selection

Operation Lamp

This is on if any of the indoor units is operating. This flashes if any of the indoor units has malfunction(s).

ALL OFF Button

Press the ALL OFF button to turn off all of the indoor units.

ALL ON Button

Press the ALL ON button to turn on all of the indoor units.

ALL TIMER Button

Press the ALL TIMER button to turn the timer operation on or off for all indoor units.

Start / Stop Button

Press the ON / OFF button to turn the corresponding indoor unit on or off.

Indoor Unit Name Labels

Write the names of the indoor units on the included labels and attach them.

Timer and Clock Display and setting

With cover open

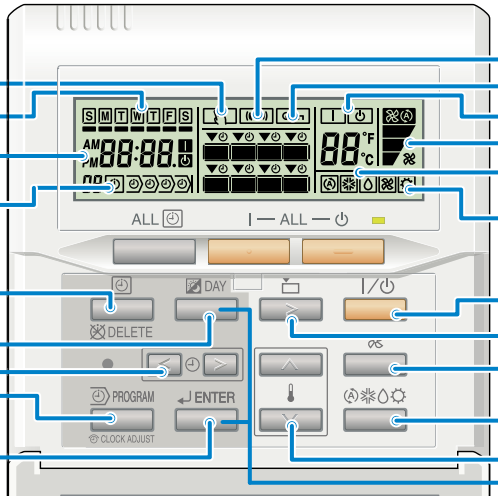

Setting Display
Day Display
Timer and Clock Display
Timer Mode Display
Timer Mode (DELETE) Button
DAY Button
Set Time Button
PROGRAM (CLOCK ADJUST) Button
ENTER Button

Displaying the Status and Controlling indoor units

Transmission Display
Operation Lock Display
ON / OFF Display
Fan Speed Display
Set Temperature Display
Operation Mode Display
Start / Stop Button
Select Button
Fan Control Button
*1, *2, *3
Operation Mode Button
Set Temperature Button
Child Lock Function

*1: "AUTOⒶ" is not available for a heat pump model unless it is set up as an administrative indoor unit.

*2: "FAN※" is not available for a heat pump model

*3: "HEAT☼" is not available for a cooling only model

CONTROL SYSTEM

■ SYSTEM DIAGRAM

● When connecting one group remote controller

● When multiple group remote controllers are connected

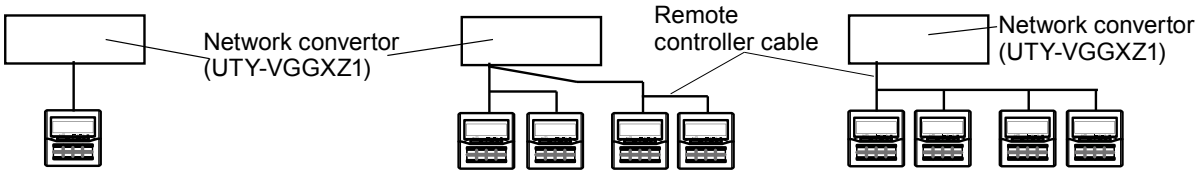

- Total remote controller cable length : Max. 100m.
- Connectable group remote controller : Max. 4units / convertor.
- Use of a terminal box is recommended when a junction is made in the wiring.

■ ELECTRICAL WIRING

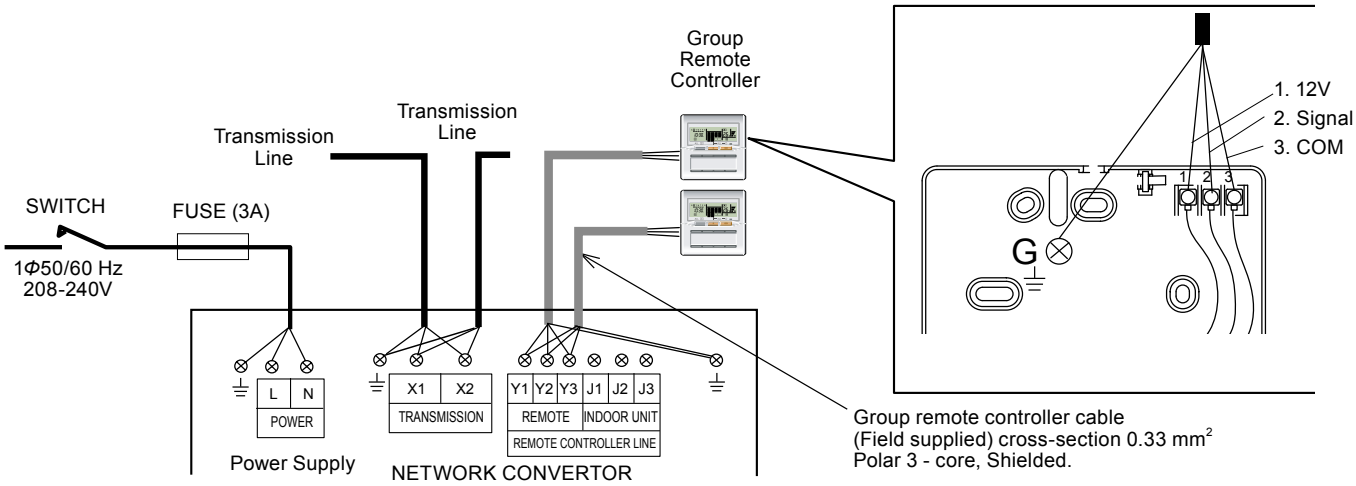

■ DIMENSIONS

[Unit : mm]

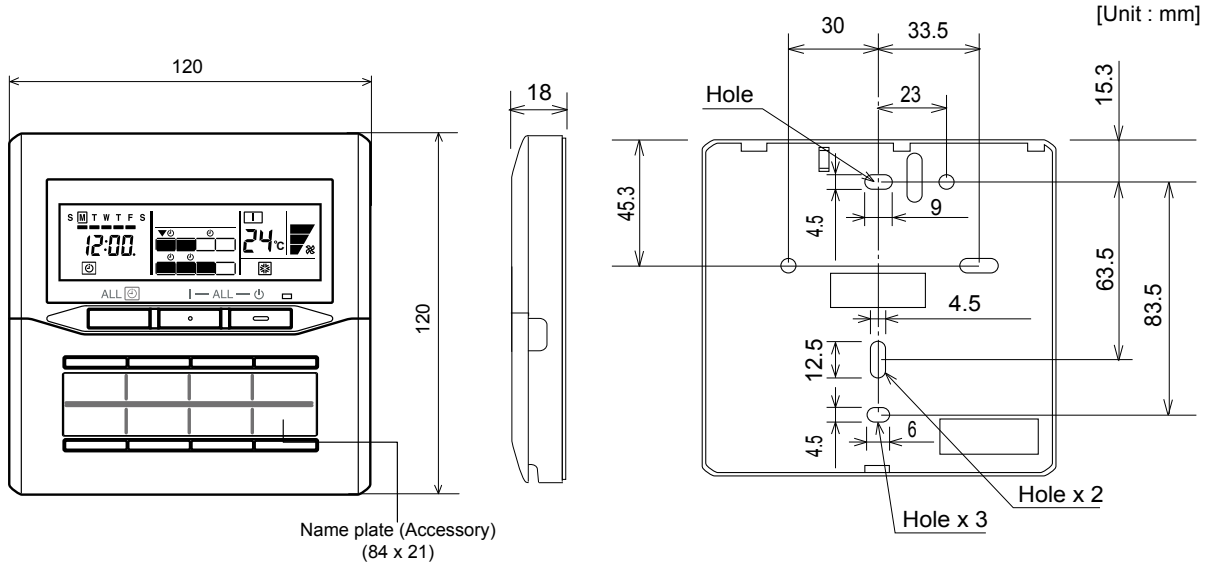

■ PACKING LIST

Name and shape	Quantity	Application
Label 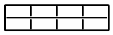	4	Use this for writing the names of the indoor units that have been registered.
Screw (M4x16mm) 	2	For installing the remote controller
Binder 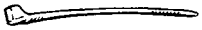	1	For remote controller and remote controller cable binding
Installation manual 	1	
Operating manual 	1	

■ WIRING SPECIFICATIONS

Use	Size	Wire type	Remarks
Remote controller cable	0.33mm^2 (22AWG)	Polar 3 core	Use sheathed PVC cable or shielded cable in accordance with the regional cable standard.

■ SPECIFICATIONS

Model name	UTY - CGG∗
Dimensions [H x W x D] (mm)	120 x 120 x 18
Weight (g)	200

CONTROL SYSTEM

2-5. WIRED REMOTE CONTROLLER (Touch panel)

■ MODEL : UTY - RNR∗

■ FEATURES



- Easy finger touch operation with LCD panel
- Built-in weekly/Daily timer(ON/OFF,Temp.,Mode)
- Backlight enables easy operation in a darkened room
- Room temperature display
- Control up to 16 indoor units
- Corresponds to 7 different languages (English, Chinese, French, German, Spanish, Russian, Polish)

● High performance and compact size

In addition to the individual control, various energy saving controls can be realized using one remote controller only.

Individual control + Thermo sensor + Weekly timer + Auto off timer →



● Accurate and comfortable control

Indoor temperature can be detected accurately by the inclusion of a thermo sensor in the body of the wired controller.



● Various energy saving control

Auto OFF Timer

- The indoor unit automatically turns off after a set time has passed.
- The time interval for which auto off works can be set.

Ex) At interval time hour (17:00 to 24:00) to prevent forgetting to turn off

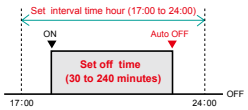

2 schedules Weekly Timer

- 2 schedules such as for the summer and winter can be set.
- 8 setting changeable per day of week (Setting items: On/Off, Temperature, Mode, Time)

Ex)

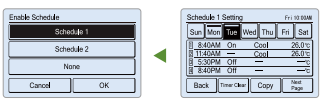

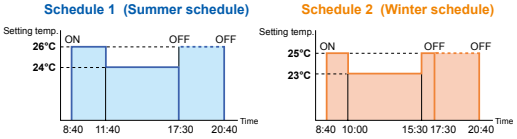

Set Temperature Auto Return

- The setting temperature automatically returns to the previous setting temperature.
- The time range in which the set temperature can be changed is 10 to 120 minutes.

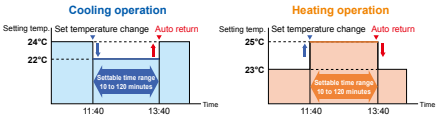

Set Temperature Upper and Lower Limit Setting

- The set temperature range can be set for each operation mode. (Cooling / Heating / Auto)

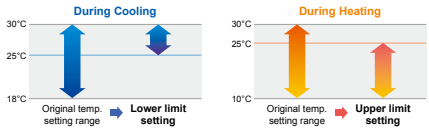

CONTROL SYSTEM

● Various convenient functions

Setback Cool / Setback Heat (Future release)

• Cooling / Heating is automatically started when the room temperature reaches a pre-set temperature even if the indoor unit is off.

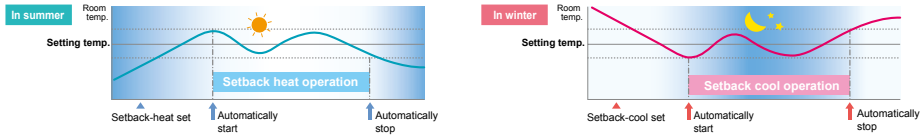

Displays setting status and Limitations

• The remote controller settings can be easily checked

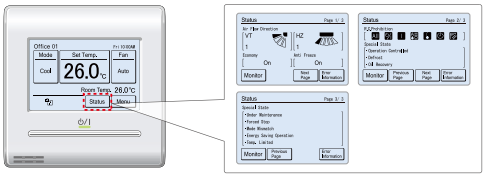



Child lock

• Lock / unlock method: Push the ON/ OFF button and the screen

(4 seconds)



Summer Time display

• This function can be set easily from Menu screen



Name Registration

• Indoor unit names can be registered in the remote controller screen.
This makes it easy to identify the indoor unit you want to control in the room.

● Simplified installation

Use of non-polar 2-wire type

• Faulty wiring can be prevented by using non-polar 2-wire.

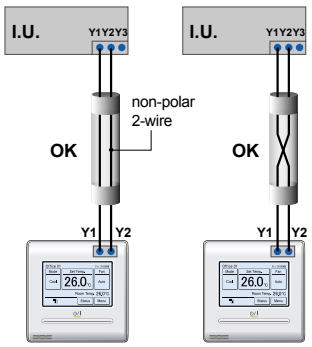

Auto Address Setting/Setting Position Notification

• Reduces errors and install time compared with the current specification Rotary SW

• When setting the remote controller groups, it can also be done automatically by the new Wired remote controller address

• After the auto address setting of the new wired remote controller groups, the address can be confirmed.

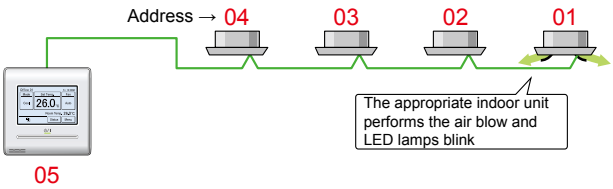

● Easy Maintenance

Error History Display

• The errors that occur in the indoor unit or remote controller are saved as a history.

• A maximum of 32 error incidents can be saved.



● Backlight

• Backlight enable easy operation in a darkened room.

• For the lighting time of Backlight, 30 or 60 seconds can be set.

• The backlight is lit while the buttons are operated and goes off 30 or 60 seconds after the operation stops.

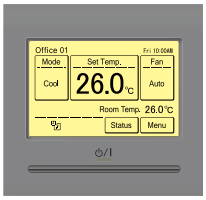

■ FUNCTIONS

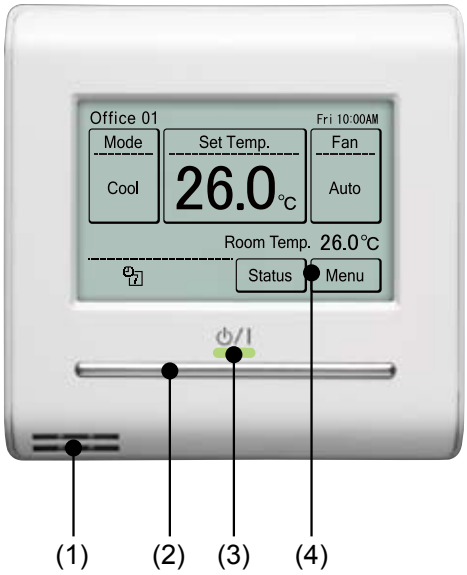

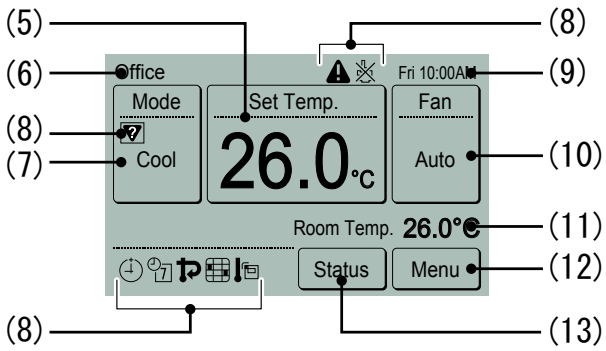

(1) Room temperature sensor (inside)

(2) On/Off button:

It is possible to operate only while displaying the Monitor Mode screen.

(3) LED lamp (Operation indicator)

(4) Touch panel display

(5) Set Temp.:

Set the operating temperature.

(6) R.C. Group name

(7) Mode:

Set the operation mode.

(8) Status icons

(9) Clock

(10) Fan:

Set the fun speed.

(11) Room temperature

(12) Menu:

Set the various settings.

(13) Status:

Check the status of indoor unit and error.

CONTROL SYSTEM

■ SYSTEM DIAGRAM

● Multiple remote control

Up to 4 remote controllers can be used to operate the indoor units.

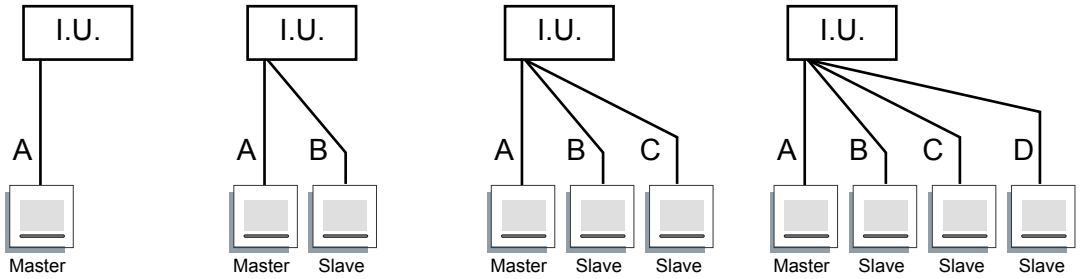

A, B, C, D : Remote controller cable. (Refer to Chapter6. 4-4 for detail specifications)
A≤500m, A+B≤500m, A+B+C≤500m, A+B+C+D≤500m.
Note: Multiple installation method described above is prohibited to combine with UTY-RNK* (3 Wired type) or UTY-RSK* (3 Wired type) or UTY-RHK* (3 Wired type) and UTY-RNR* (2 Wired Type)

● Group control

With a single remote controller, up to 16 units can be simultaneously operated.

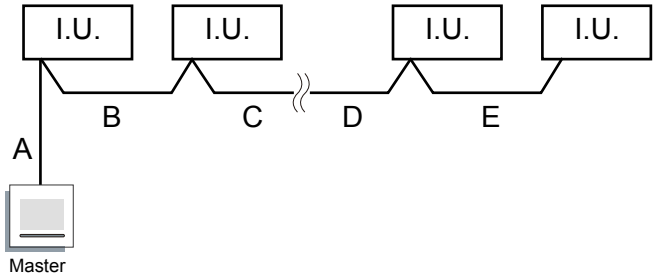

A, B, C, D, E : Remote controller cable. (Refer to Chapter6. 4-4 for detail specifications)
A+B+C+D+E≤500m.

CONTROL SYSTEM

■ ELECTRICAL WIRING

● Single control

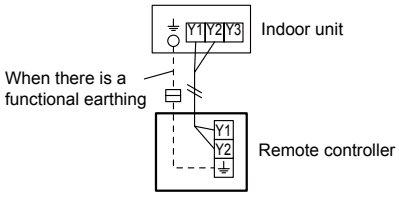

● Multiple remote control

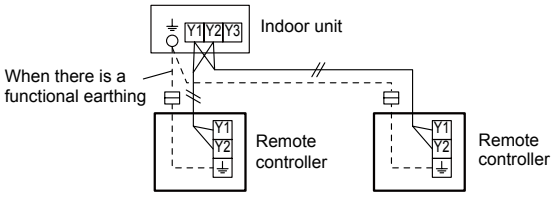

● Group control

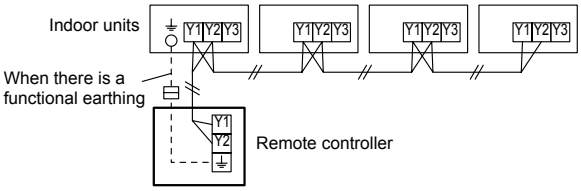

■ DIMENSIONS

[Unit : mm]

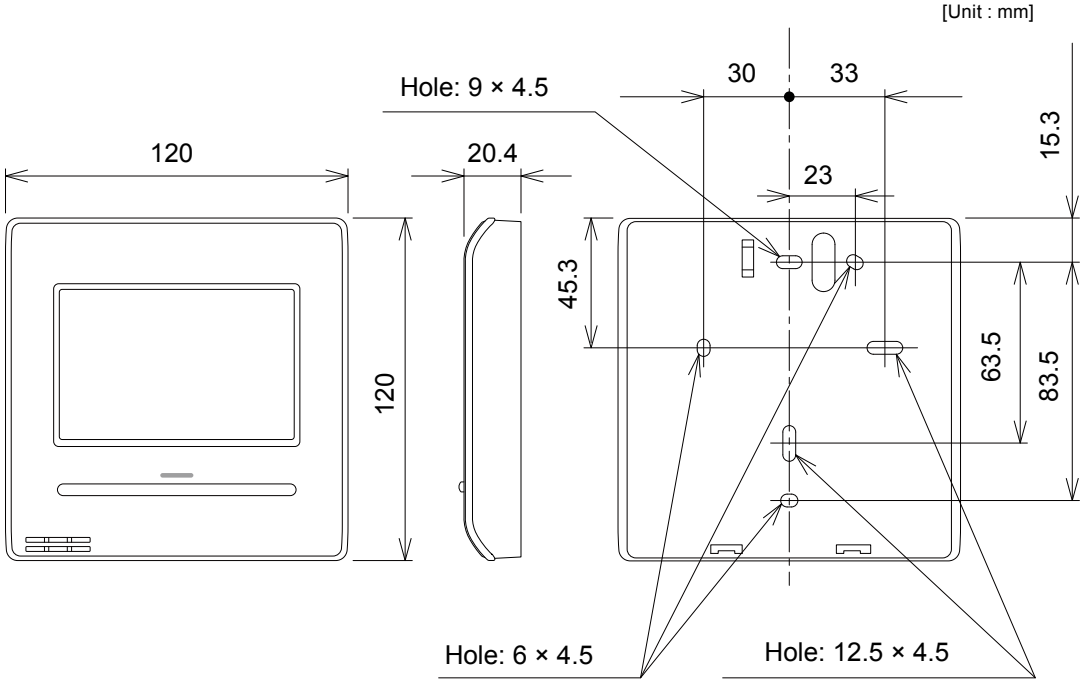

CONTROL SYSTEM

■ INSTALLATION

● Connection Pattern

Note: Connection pattern is different according to type of Indoor unit.

Indoor unit types	Connection Pattern
All Cassette type	Pattern A
All Duct type	
All Ceiling type	
Wall Mounted type	Pattern B

● Pattern A

Connect the end of remote controller cable directly to the exclusive terminal block.
Set the DIP switch(SW1) to "2WIRE" on the PCB (printed circuit board) of the indoor unit.

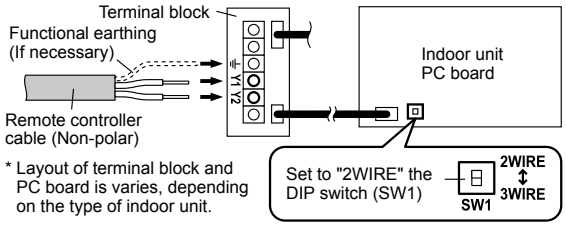

Note: Operation may fail if it is connected to the outdoor unit or the terminal block for power supply.

● Pattern B

1) Use a tool to cut off the terminal on the end of the remote controller cable, and then remove the insulation from the cut end of the cable as shown in Fig. 1. Connect the remote controller cable and connecting cable as shown in Fig. 2. Be sure to insulate the connection between the cables.

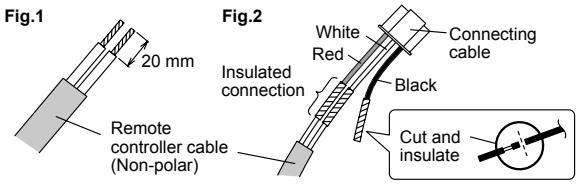

2) Connect the remote controller cable to the connecting cable, and insert it to the connector. Set the DIP switch(SW1) to "2WIRE" on the PC board of the indoor unit.

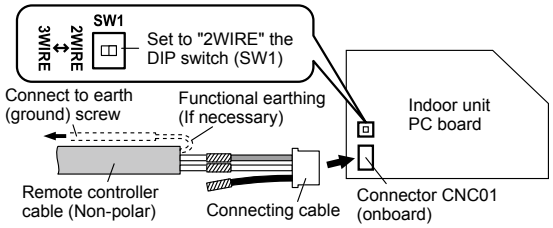

* Layout of Connector and PC board varies, depending on the type of indoor unit

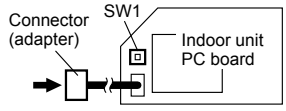

CONTROL SYSTEM

■ PACKING LIST

Name and shape	Quantity	Application
CD-ROM 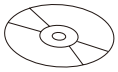	1	
Screw (M4 x 16mm) 	2	For installing the remote controller
Cable tie 	1	For remote controller and remote controller cable binding
Installation manual 	1	
Operating manual 	1	

■ WIRING SPECIFICATIONS

Use	Cable size	Wire type	Model name	Remarks
Remote controller cable	0.33 to 1.25 mm^2	Non polar 2 core	UTY-RNR∗	Use sheathed twisted pair cable*

*Use shielded cable (field supplied) in accordance with the regional cable standard

CONTROL SYSTEM

■ SPECIFICATIONS

Model name	UTY-RNR∗
Input voltage	DC 12 V
Power consumption	Max. 0.3 W
Display	3.8 inch FSTN LCD display (255 × 160 dots) with Touch panel
Usage temperature range	0 to 40 °C
Usage humidity range	20 to 90 % (no condensation)
Storage temperature range	-10 to 60 °C
Storage humidity range	20 to 90 % (no condensation)
Dimensions [H × W × D mm]	120 × 120 × 20.4
Weight [g]	220

2-6. WIRED REMOTE CONTROLLER

■ MODEL : UTY - RNK∗

■ FEATURES

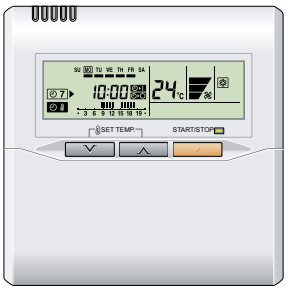

- Various timer setup (ON / OFF / WEEKLY) are possible.
- Equipped with weekly timer as standard function. (Start / Stop function is twice per day for a week)
- When setting up a timer, start / stop and the temperature setup can be changed.
- When a failure occurs, the error code is displayed.
- Error history.(Last 16 error codes can be accessed.)
- Up to 16 indoor units can be simultaneously controlled.
- The room temperature can be controlled by detecting the temperature accurately with Built-in thermo sensor.

● Powerful features and compact size

Individual control + Thermo sensor + Weekly timer + Setback timer = Wired remote controller

● Accurate and comfortable

Indoor temperature can be detected accurately by the inclusion of a thermo sensor in the body of the wired controller.

The system can correspond to various scenes.

This wired remote controller and the optional remote sensor allows flexibility in sensor location, and suitable for all requirements.

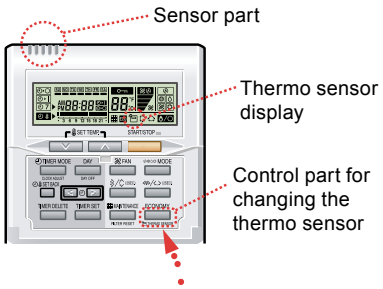

● Built-in timers

Weekly timer

Possible to set ON/OFF time to operate twice each day of the week.

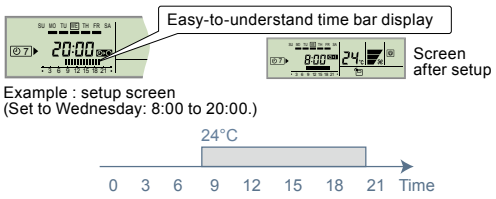

Setback timer

Possible to set temperature for two time spans and for each day of the week.

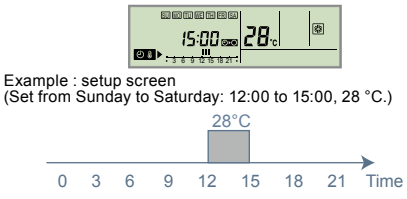

At "Weekly timer" + "Set back timer" setup



● Easy-to-understand operation

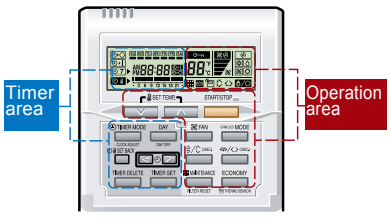

[Variable timer control]

The operation/display sections are zoned according to time and operation, enabling variable programming to match application.

● Simple installation

Components are compatible with standard switch boxes. Flat back surface allows equipment to be installed wherever it is needed.

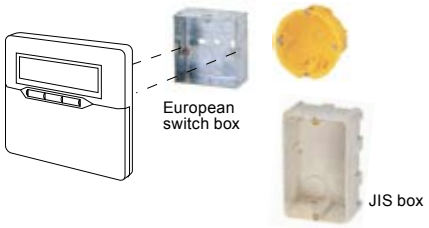

CONTROL SYSTEM

■ FUNCTIONS

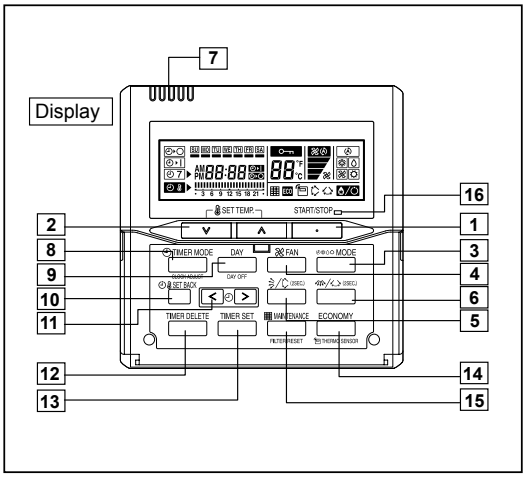

Display panel

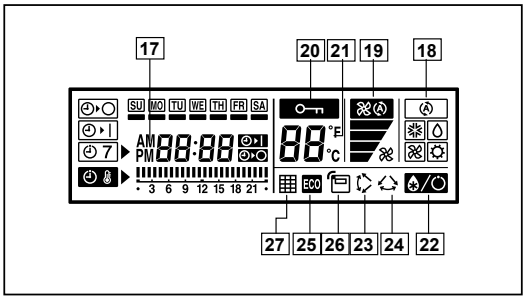

1 START/STOP button
Pressed to start and stop operation.

2 Set Temperature button
Selects the setting temperature.(18-30°C[COOL], 10-30°C[HEAT])

3 Operation mode button ∗2
Selects the operating mode (AUTO Ⓐ∗1, COOL ❄, DRY◊ , FAN ∗3, HEAT ☼∗4).

4 Fan control button
Selects the fan speed (AUTO , LOW , MED , HIGH).

5 Vertical air flow direction and swing button
Press for two seconds to change the swing mode

6 Horizontal air flow direction and swing button
Press for two seconds to change the swing mode.

7 Built-in thermo sensor
Detect room temperature.

8 Timer mode (CLOCK ADJUST) button
Selects the timer mode (OFF TIMER, ON TIMER, WEEKLY TIMER)
Set the current time.

9 Day (DAY OFF) button
Temporarily cancels of one day timer.

10 Set back button
Pressed select the set back timer.

11 Set time button
Pressed to select the set back timer.

12 Delete button
The schedule of a weekly timer is deleted.

13 Set button
Sets the date, hour, minute and on-off time.

14 Economy button / Thermo sensor button

15 Filter button

16 Operation lamp
Lights during operation and when the timer is on.

17 Timer and clock display

18 Operation mode display

19 Fan speed display

20 Operation lock display

21 Temperature display
Displayed temperature is set temperature.

22 Defrost display
Indicates during the oil recovery and defrosting operation.

23 Vertical swing display

24 Horizontal swing display

25 Economy display

26 Thermo sensor display

27 Filter display

∗1 : "AUTOⒶ" is not available for a heat pump model unless it is set up as an administrative indoor unit.

∗2 : Indoor unit can be set to administrative indoor unit by pressing "MODE" button for five seconds or more.

∗3 : "FAN∗" is not available for a heat pump model.

∗4 : "HEAT☼" is not available for a cooling only model.

CONTROL SYSTEM

■ SYSTEM DIAGRAM

● 1 remote controller

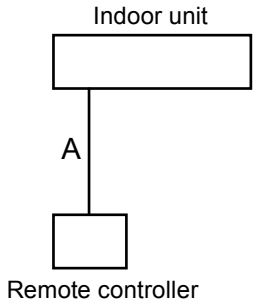

● 2 remote controllers

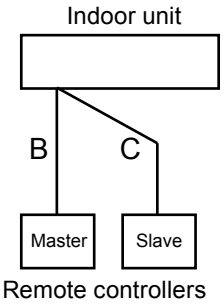

A , B , C : Remote controller cable.
Refer to 6-4-4 for detail specifications.
A ≦500m ; B+C ≦500m

■ ELECTRICAL WIRING

● 1 remote controller

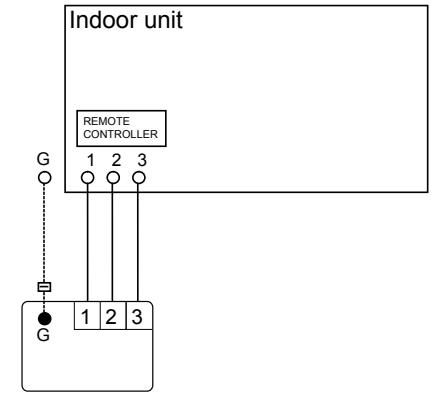

● 2 remote controllers

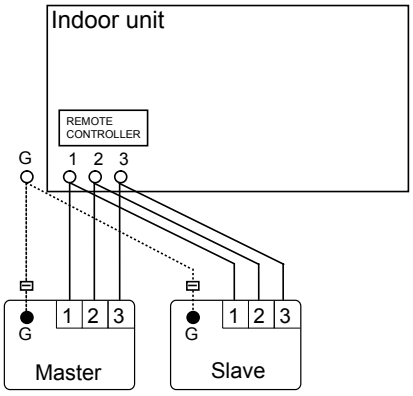

1 (RED) : 12V
2 (WHITE) : Signal
3 (BLACK) : COM

■ DIMENSIONS

[Unit : mm]

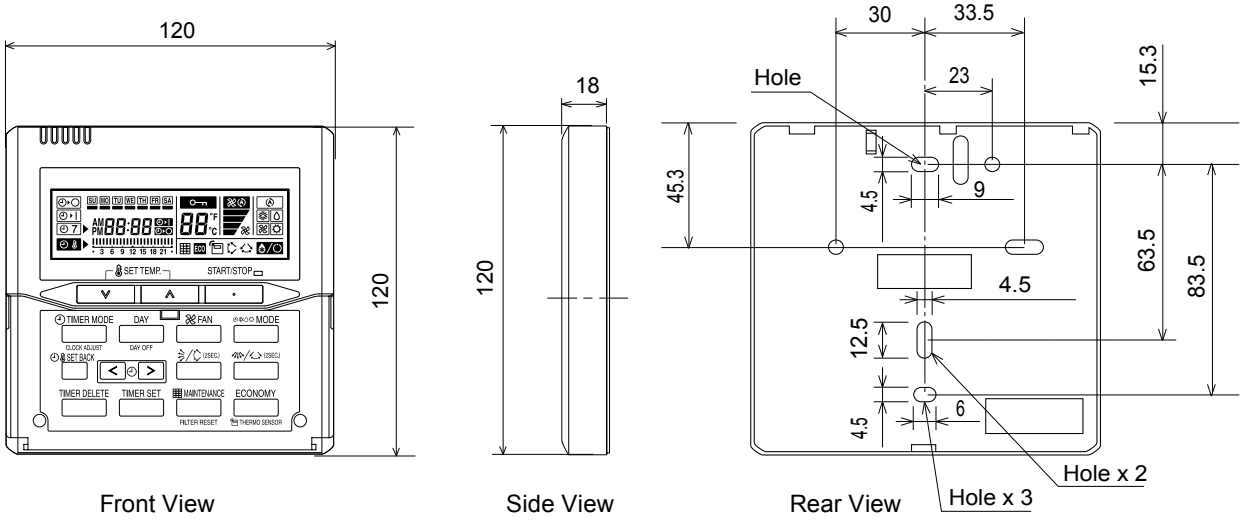

■ INSTALLATION

● Connection Pattern

Note: Connection pattern is different according to type of Indoor unit.

Indoor unit types	Connection Pattern
All Cassette type	Pattern A
All Duct type	
All Ceiling type	
Wall Mounted type	Pattern B

● Pattern A

Connect the end of remote controller cable directly to the exclusive terminal block.

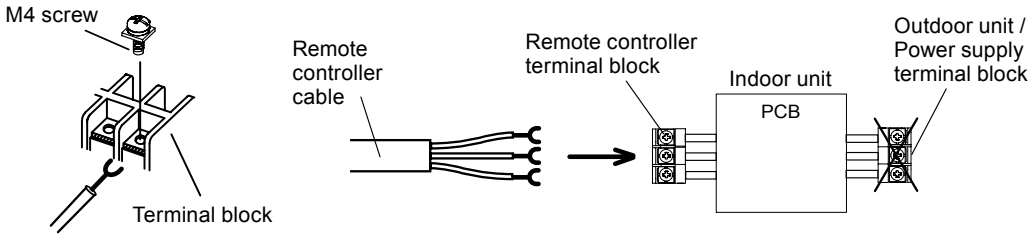

Note: The equipment may fail if it is connected to the outdoor unit or the power supply terminal block.

● Pattern B

1) Modify the remote controller cable as per below methods.

- Use a tool to cut off the terminal on the end of the remote controller cable and then remove the insulation from the cut end of the cable as shown in Fig.
- Connect the remote controller cable and connecting cable as shown in Fig.
- Be sure to insulate the connection between the cables.

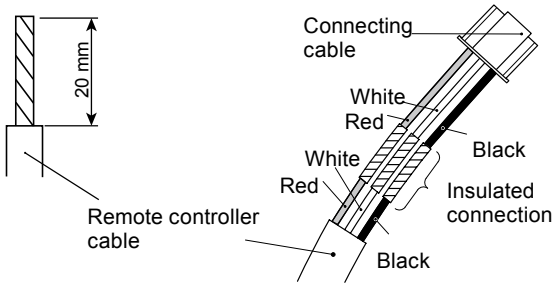

(07-14 Models)

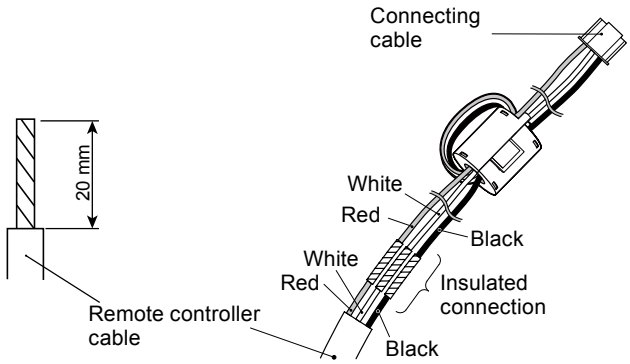

(18-30 Models)

2) Method of connecting remote controller cable

- Connecting cable made by above-mentioned 1) is connected with PCB of Indoor unit.

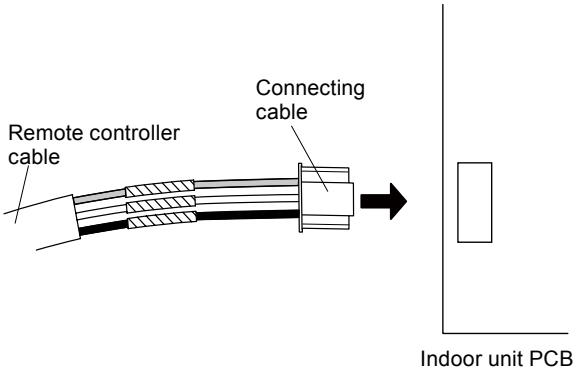

(07-14 Models)

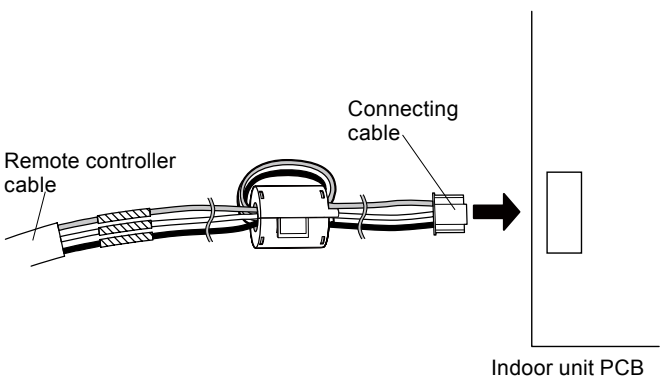

(18-30 Models)

■ PACKING LIST

Name and shape	Quantity	Application
Remote controller cable *1 	10m	For connecting the remote controller
Screw (M4 x 16mm) 	2	For installing the remote controller
Binder 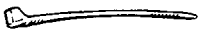	1	For remote controller and remote controller cable binding
Installation manual 	1	
Operating manual 	1	

*1 : UTY-RNKYT does not contain cables.

■ WIRING SPECIFICATIONS

Use	Cable size	Wire type	Model name *2	Remarks
Remote controller cable	0.33mm^2 (22AWG)	Polar 3 core	UTY-RNKY UTY-RNKG	Use sheathed PVC cable.
			UTY-RNKYT	Use shielded cable (field supplied) in accordance with the regional cable standard.

*2 : UTY-RNKY (FUJITSU BRAND), UTY-RNKG (GENERAL BRAND), UTY-RNKYT(Oceania MODEL)

■ SPECIFICATIONS

Model name	UTY - RNK∗
Dimensions [H x W x D] (mm)	120 x 120 x 18
Weight (g)	160

CONTROL SYSTEM

2-7. SIMPLE REMOTE CONTROLLER (With Operation mode)

■ MODEL : UTY - RSK∗

■ FEATURES



- Easy operation.
- Built-in background light function.
- Easy installation with a slim shape with no bulge in the back.
- Error history.(Last 16 error codes can be accessed.)
- Up to 16 indoor units can be simultaneously controlled.
- Can be installed onto SW-BOX. (applies to European and other country's standard)

● User-friendly operation

- Provides access to basic operations, such as Start / Stop, Fan speed, operation mode and room temperature setting.
- A large Start / Stop button is provided in the centre of the remote controller unit for easy operation.
- Following an error display, diagnostics can be carried out on the controller.

● Backlight

- Backlight enables easy operation in a darkened room.
- Backlight is activated during all button operations, and lasts 10 seconds in operating mode and 5 seconds in stop mode after a button is pressed.



● Simple installation

Can be mounted on either the European switch box (installation dimension: 60mm) or the JIS built-in box (installation dimension: 83.5mm).

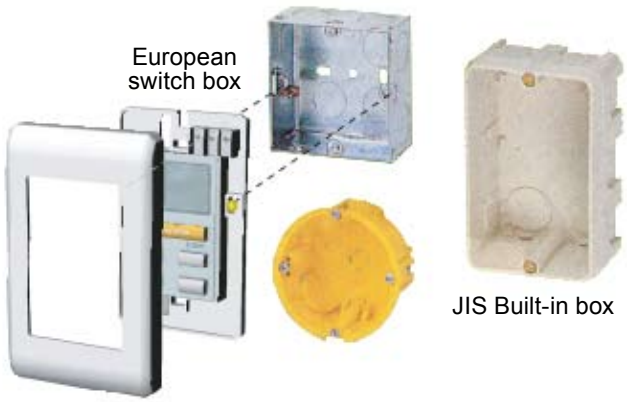

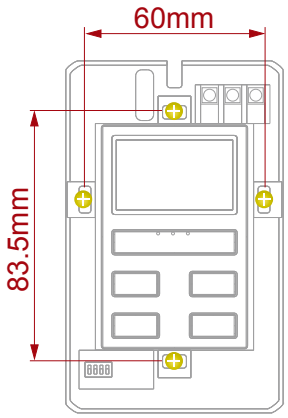

CONTROL SYSTEM

■ FUNCTIONS

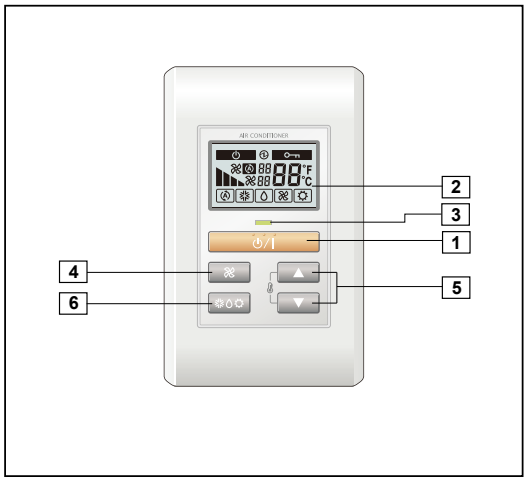

Display panel

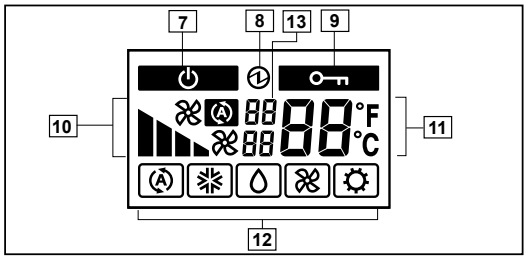

1 START/STOP button
Pressed to start and stop operation.

2 Backlight display
Lights during operation.

3 Operation lamp
Lights during operation.

4 Fan control button
Selects the fan speed (AUTO, HIGH, MED, LOW).

5 Set temperature button
Selects the setting temperature.(18-30°C[COOL], 16-30°C[HEAT])

6 Operation mode button
Selects the operating mode (AUTO *1, COOL, DRY, FAN *2, HEAT *3).

7 Standby display
Indicates during the oil recovery and defrosting operation.

8 Power source display
Indicates the main power ON.

9 Central control display
Indicates when function is locked from Touch Panel Controller or System Controller.

10 Fan speed display

11 Set temperature
Indicates Error history number. *4
Indicates Indoor unit address. *5

12 Operating mode display

13 (Upper) Indicates the error code *4 *6 / the refrigerant system address. *5
(Lower) Indicates the remote controller address. *4 *5 *6

*1 : "AUTO" is not available for a heat pump model unless it is set up as an administrative indoor unit.
*2 : "FAN" is not available for a heat pump model
*3 : "HEAT" is not available for a cooling only model
*4 : during Error code history display mode.
*5 : during address display mode.
*6 : during self Diagnosis mode.

■ SYSTEM DIAGRAM

● 1 remote controller

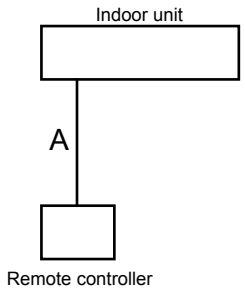

● 2 remote controllers

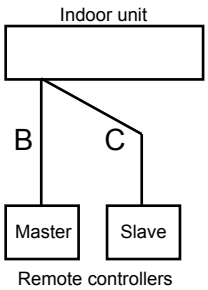

A , B , C : Remote controller cable.
Refer to 6-4-4 for detail specifications.
A ≦500m ; B+C ≦500m

CONTROL SYSTEM

■ ELECTRICAL WIRING

● 1 remote controller

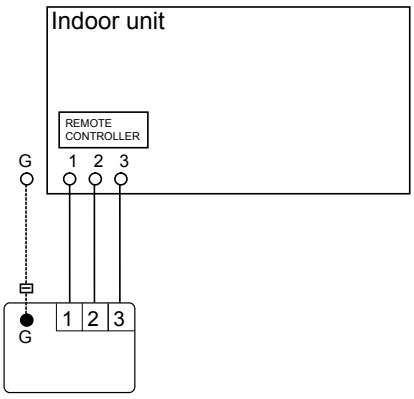

Remote controller

● 2 remote controllers

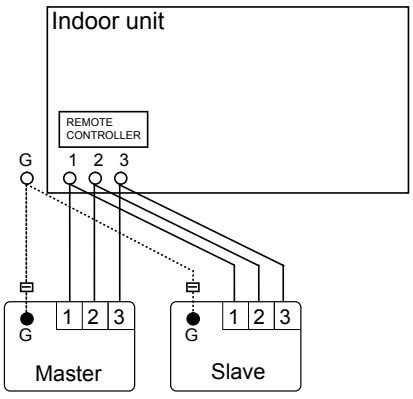

Remote controllers

1 (RED) : 12V
2 (WHITE) : Signal
3 (BLACK) : COM

■ DIMENSIONS

[Unit : mm]

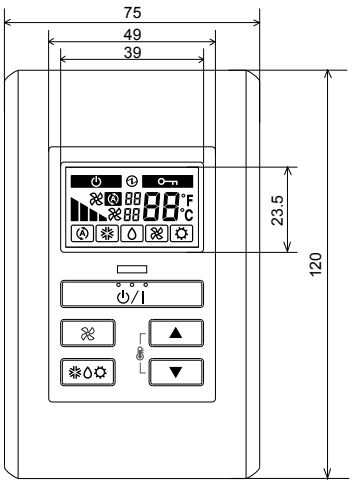

Front View

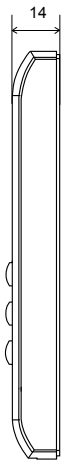

Side View

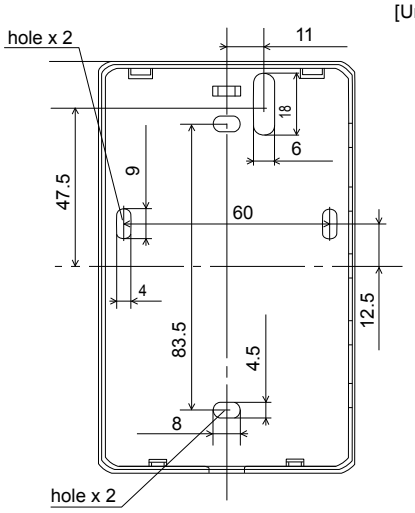

Rear View

CONTROL SYSTEM

■ INSTALLATION

● Connection Pattern

Note: Connection pattern is different according to type of Indoor unit.

Indoor unit types	Connection Pattern
All Cassette type	Pattern A
All Duct type	
All Ceiling type	
Wall Mounted type	Pattern B

● Pattern A

Connect the end of remote controller cable directly to the exclusive terminal block.

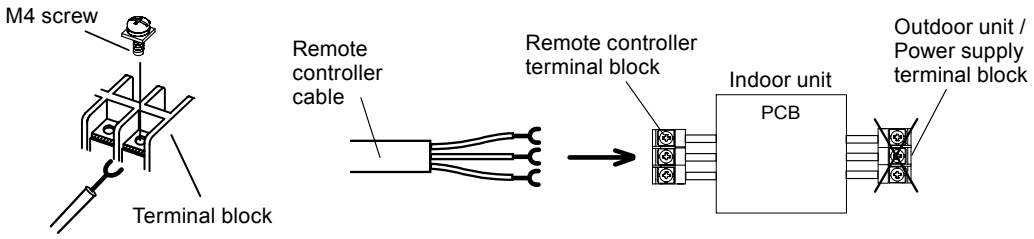

Note: The equipment may fail if it is connected to the outdoor unit or the power supply terminal block.

● Pattern B

1) Modify the remote controller cable as per below methods.

- Use a tool to cut off the terminal on the end of the remote controller cable and then remove the insulation from the cut end of the cable as shown in Fig.
- Connect the remote controller cable and connecting cable as shown in Fig.
- Be sure to insulate the connection between the cables.

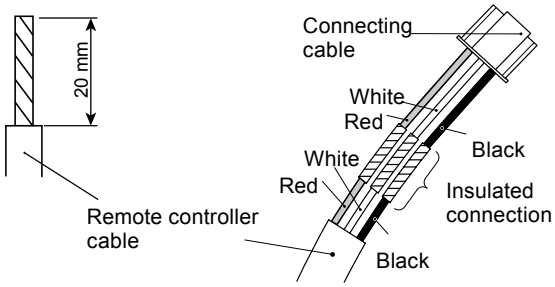

(07-14 Models)

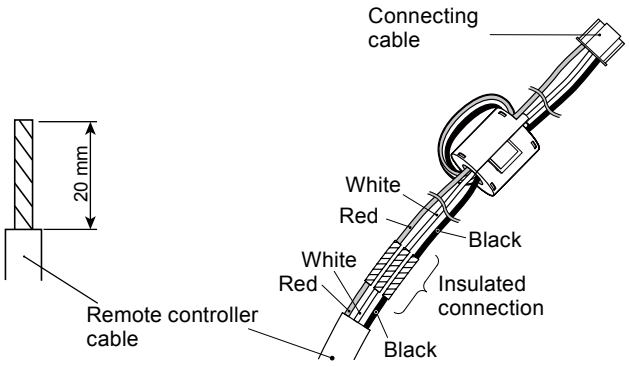

(18-30 Models)

2) Method of connecting remote controller cable

- Connecting cable made by above-mentioned 1) is connected with PCB of Indoor unit.

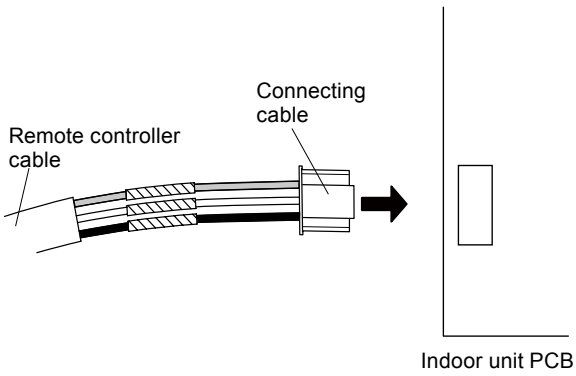

(07-14 Models)

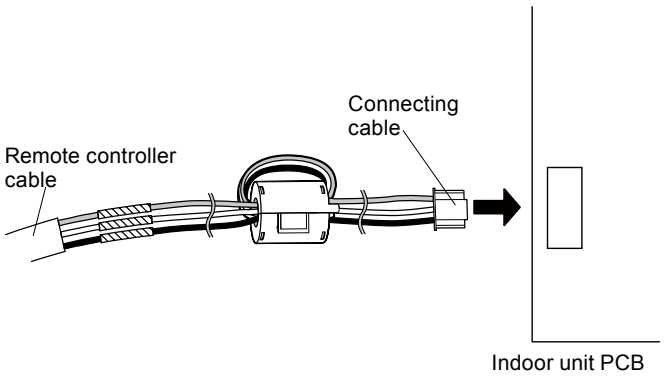

(18-30 Models)

CONTROL SYSTEM

■ PACKING LIST

Name and shape	Quantity	Application
Remote controller cable *1 	10m	For connecting the remote controller
Screw (M4 x 16mm) 	2	For installing the remote controller
Binder 	1	For remote controller and remote controller cable binding
Installation manual 	1	
Operating manual 	1	

*1 : UTY-RSKYT does not contain cables

■ WIRING SPECIFICATIONS

Use	Size	Wire type	Model name *2	Remarks
Remote controller cable	0.33mm^2 (22AWG)	Polar 3 core	UTY-RSKY UTY-RSKG	Use sheathed PVC cable.
			UTY-RSKYT	Use shielded cable (field supplied) in accordance with the regional cable standard.

*2 : UTY-RSKY (FUJITSU BRAND), UTY-RSKG (GENERAL BRAND), UTY-RSKYT(Oceania MODEL)

■ SPECIFICATIONS

Model name	UTY - RSKY UTY - RSKG	UTY - RSKYT
Dimensions [H x W x D] (mm)	120 x 75 x 14	
Weight (g)	90	100

CONTROL SYSTEM

2-8. SIMPLE REMOTE CONTROLLER (Without Operation mode)

■ MODEL : UTY - RHK∗

Note :
A part of function is limited. It is recommended to use it together with other type controller.

■ FEATURES



- Easy operation.
- Built-in Backgroud Light function.
- Easy installation with a slim shape with no bulge in the back.
- Error history.(Last 16 error codes can be accessed.)
- Up to 16 indoor units can be simultaneously controlled.
- Can be installed onto SW-BOX. (applies to European and other country's standard)
- Concentrates on the basic operations such as Start/Stop, Fan Control, and Temperature Setting.

● User-friendly operation

- Provides access to basic operations, such as Start / Stop, Fan speed and room temperature setting.
- A large Start / Stop button is provided in the centre of the remote controller unit for easy operation.
- Following an error display, diagnostics can be carried out on the controller.

● Background light

- Background light enables easy operation in a darkened room.
- Background light activates during all button operations, and lasts 10 seconds in operating mode and 5 seconds in stop mode after a button is pressed.



● Simple installation

Can be mounted on the European Switch Box (installation dimension: 60mm) or the JIS Built-in Box (installation dimension: 83.5mm).

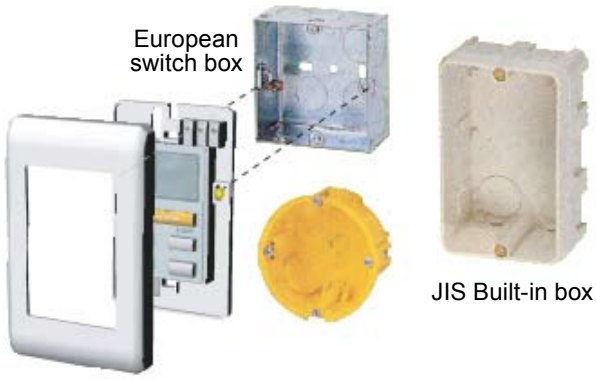

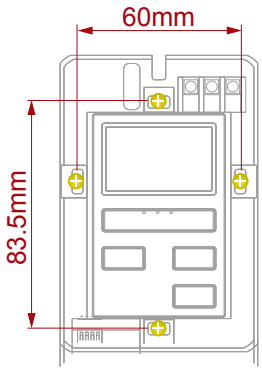

CONTROL SYSTEM

■ FUNCTIONS

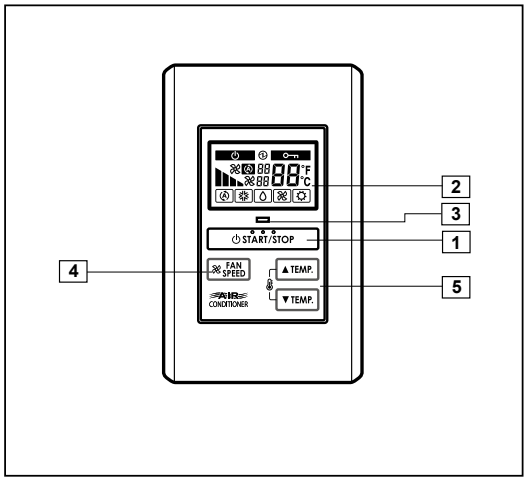

Display panel

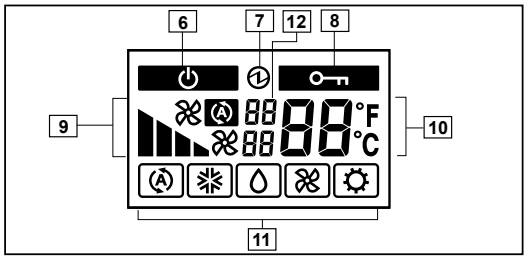

1 START/STOP button
Pressed to start and stop operation.

2 Display background light
Lights during operation.

3 Operation lamp
Lights during operation.

4 Fan control button
Selects the fan speed (AUTO, HIGH, MED, LOW).

5 Set temperature button
Selects the setting temperature.(18-30°C[COOL], 16-30°C[HEAT])

6 Standby display
Indicates during the oil recovery and defrosting operation.

7 Power source display
Indicates the main power ON.

8 Central control display
Indicates when function is locked from Touch Panel Controller or System Controller.

9 Fan speed display

10 Set temperature
Indicates Error history number. *1
Indicates Indoor unit address. *2

11 Operating mode display

12 (Upper) Indicates the error code *1, *3 / the refrigerant system address. *2
(Lower) Indicates the remote controller address. *1, *2, *3

*1 : during Error code history display mode.
*2 : during address display mode.
*3 : during self Diagnosis mode.

■ SYSTEM DIAGRAM

● 1 remote controllers

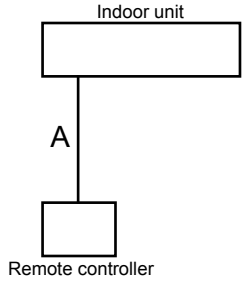

● 2 remote controllers

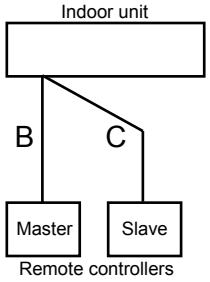

A , B , C : Remote controller cable. Refer to 6-4-4 for detail specifications.
A ≦500m ; B+C ≦500m

CONTROL SYSTEM

■ ELECTRICAL WIRING

● 1 remote controller

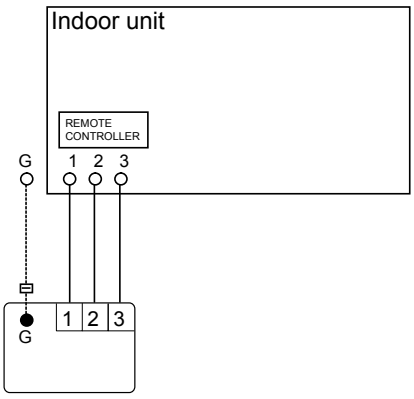

Remote controller

● 2 remote controllers

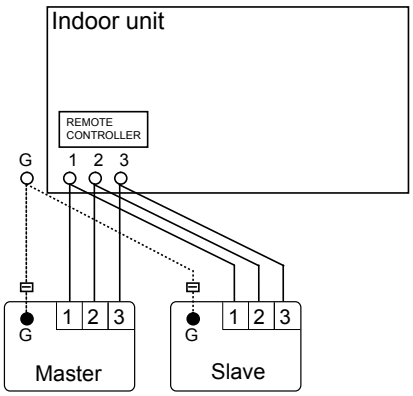

Remote controllers

1 (RED) : 12V
2 (WHITE) : Signal
3 (BLACK) : COM

■ DIMENSIONS

[Unit : mm]

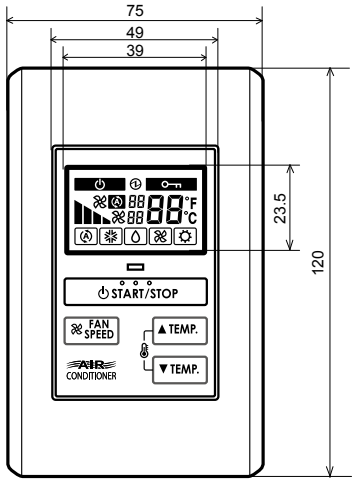

Front View



Side View

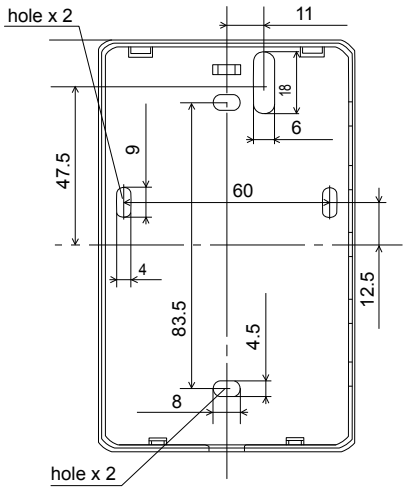

Rear View

CONTROL SYSTEM

■ INSTALLATION

● Connection Pattern

Note: Connection pattern is different according to type of Indoor unit.

Indoor unit types	Connection Pattern
All Cassette type	Pattern A
All Duct type	
All Ceiling type	
Wall Mounted type	Pattern B

● Pattern A

Connect the end of remote controller cable directly to the exclusive terminal block.

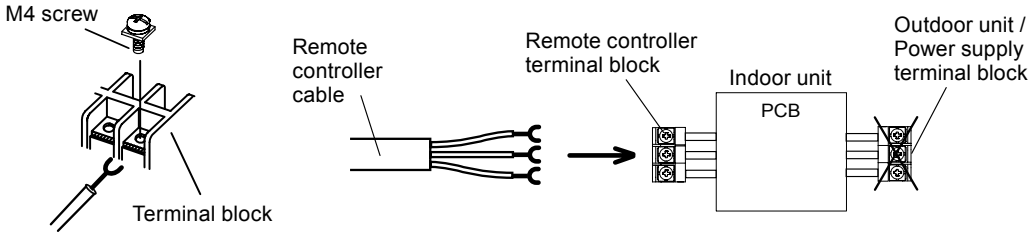

Note: The equipment may fail if it is connected to the outdoor unit or the power supply terminal block.

● Pattern B

1) Modify the remote controller cable as per below methods.

- Use a tool to cut off the terminal on the end of the remote controller cable and then remove the insulation from the cut end of the cable as shown in Fig.
- Connect the remote controller cable and connecting cable as shown in Fig.
- Be sure to insulate the connection between the cables.

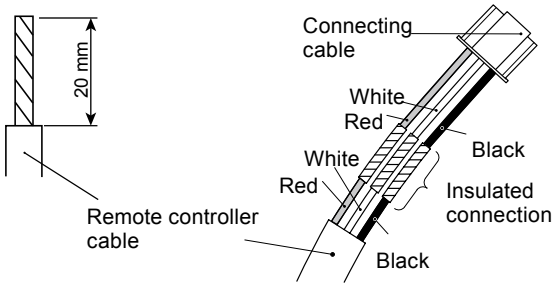

(07-14 Models)

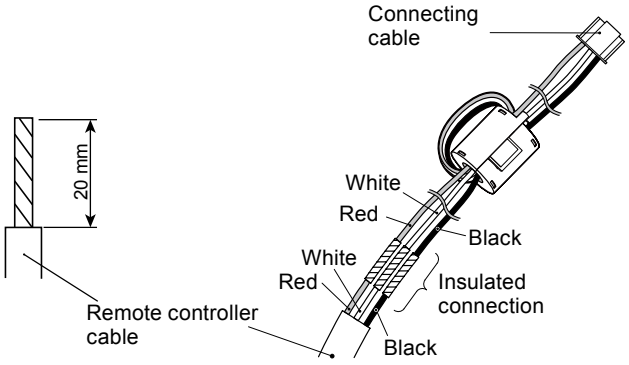

(18-30 Models)

2) Method of connecting remote controller cable

- Connecting cable made by above-mentioned 1) is connected with PCB of Indoor unit.

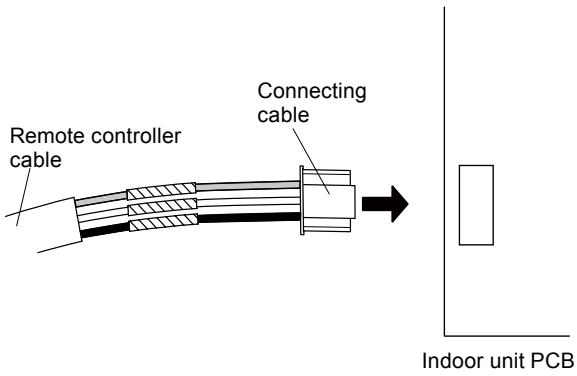

(07-14 Models)

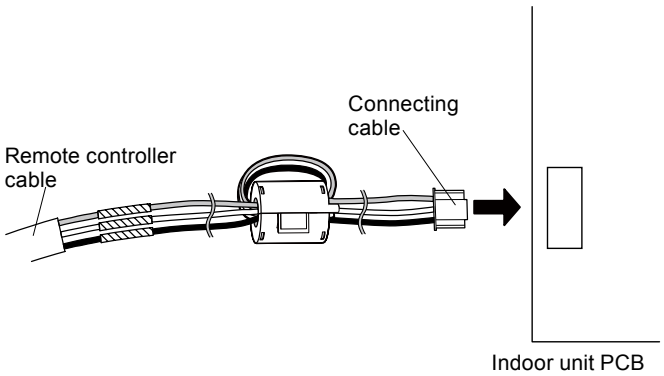

(18-30 Models)

CONTROL SYSTEM

■ PACKING LIST

Name and shape	Quantity	Application
Remote controller cable *1 	10m	For connecting the remote controller
Screw (M4 x 16mm) 	2	For installing the remote controller
Binder 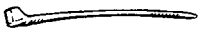	1	For remote controller and remote controller cable binding
Installation manual 	1	
Operating manual 	1	

*1 : UTY-RHKYT does not contain cables.

■ WIRING SPECIFICATIONS

Use	Size	Wire type	Model name *2	Remarks
Remote controller cable	0.33mm^2 (22AWG)	Polar 3 core	UTY-RHKY UTY-RHKG	Use sheathed PVC cable.
			UTY-RHKYT	Use shielded cable (field supplied) in accordance with the regional cable standard.

*2 : UTY-RHKY (FUJITSU BRAND), UTY-RHKG (GENERAL BRAND), UTY-RHKYT(Oceania MODEL)

■ SPECIFICATIONS

Model name	UTY - RHKY UTY - RHKG	UTY - RHKYT
Dimensions [H x W x D] (mm)	120 x 75 x 14	
Weight (g)	90	100

CONTROL SYSTEM

2-9. WIRELESS REMOTE CONTROLLER

■ MODEL : UTY - LNH∗

■ FEATURES



- Four mode timer setup available (ON/OFF/PROGRAM/SLEEP)
- Up to 16 indoor units connected within the remote controller group can be simultaneously controlled.
- Can be used jointly with wired remote controllers.
- Easy to change custom code (max. 4 units).

● Built-in timers

Select from four different timer programs (On / Off / Program / Sleep).

● Program timer

The program timer operates the on and off timer once within a 24 hour period.

● Sleep timer

The sleep timer function automatically corrects the temperature thermostat setting according to the time setting to prevent excessive cooling and heating while sleeping.

Cooling operation / dry operation

When the sleep timer is set, the set temperature automatically rises 1°C every hour. The set temperature can rise up to a maximum of 2°C.

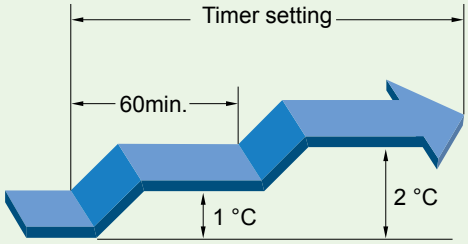

Heating operation

When the sleep timer is set, the set temperature automatically drops 1°C every 30 minutes. The set temperature can drop to a maximum of 4°C.

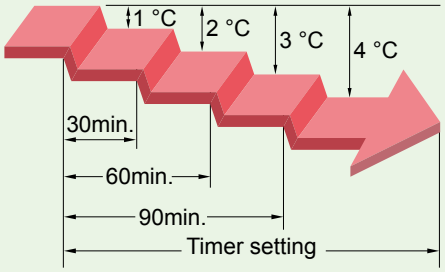

● Easy installation and operation

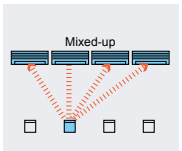

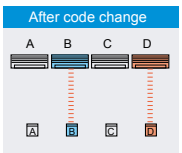

- Custom code is used for controlling right indoor unit. (Up to 4 codes can be set)



- Wide and precise transmitting range.

● System addressing

- During installation work, system addressing can be performed using the wireless remote controller, thus eliminating manual switch setting.

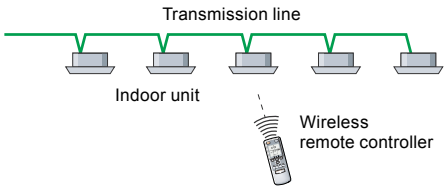

Note : Timer setting from a wireless remote controller becomes invaild, if the indoor unit is connected with a wired or a simple remote controller.

CONTROL SYSTEM

■ FUNCTIONS

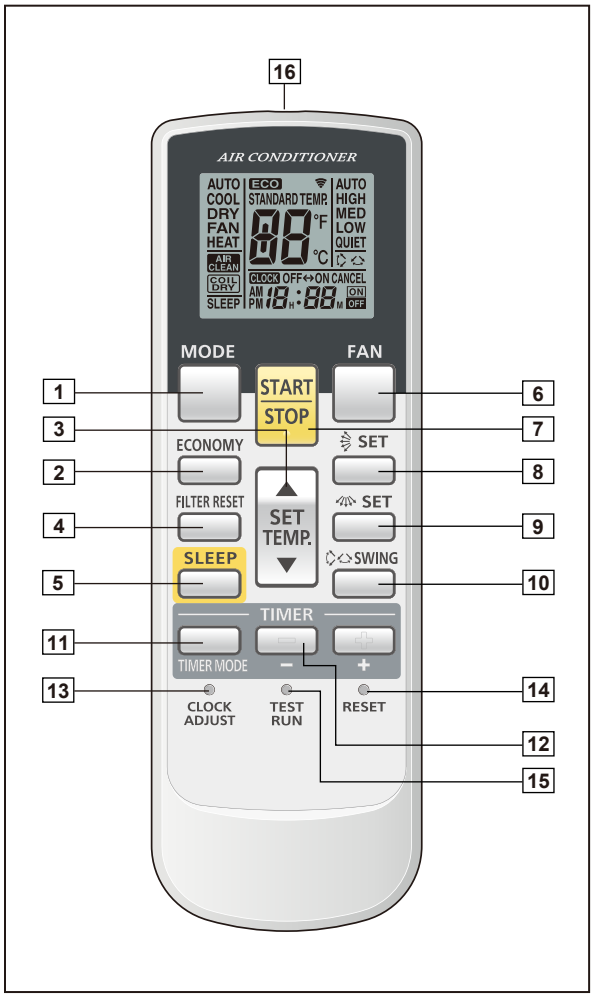

Display panel

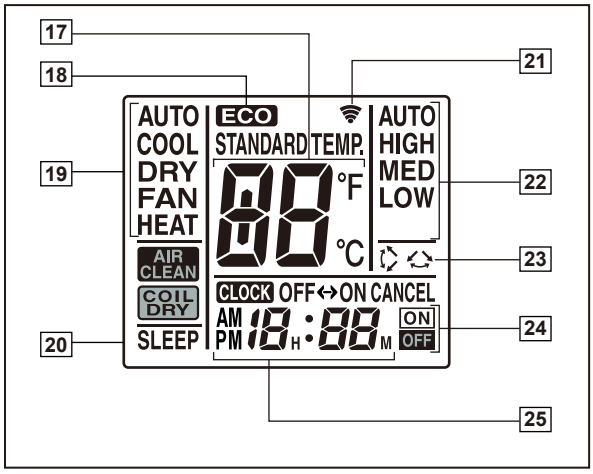

1 OPERATION MODE button
Selects the operating mode (AUTO, HEAT, FAN, COOL, DRY).
/Start / end R.C. custom code change. (Max 4 types)

2 Economy button

3 Set temp. button (▲ / ▼)
Set remote controller custom code buttons
Sets the indoor temp./ Sets R.C. custom code.

4 Filter reset button

5 Sleep button
Pressed to select sleep timer.

6 Fan button
Selects the fan speed (AUTO, LOW, MED, HIGH).

7 START/STOP button
Pressed to start and stop operation.

8 Set button (Vertical)
Air flow direction vertical set button.

9 Set button (Horizontal)
Air flow direction horizontal set button.

10 Swing button
Air flow direction swing button.

11 Timer mode button
Pressed to select the timer mode. (OFF TIMER, ON TIMER, PROGRAM TIMER, TIMER RESET)

12 Timer set (+ / -) button
Sets the current time and on-off time.

13 Clock adjust button
Sets the current time.

14 Reset button
Used when replacing batteries.

15 Test run button
Used when testing the air conditioner after installation.

16 Signal transmitter

17 Temperature set display

18 Economy display

19 Operating mode display

20 Sleep display

21 Transmit indicator

22 Fan speed display

23 Swing display

24 Timer mode display

25 Clock display

*1 : "AUTOⒶ" is not available for a heat pump model unless it is set up as an administrative indoor unit.

*2 : "FAN※" is not available for a heat pump model

*3 : "HEAT☼" is not available for a cooling only model

CONTROL SYSTEM

■ SYSTEM DIAGRAM

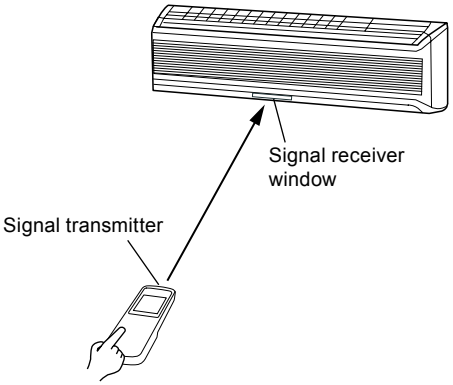

- Control signal might not be recognized in following cases:
  (i) A curtain or a wall, etc. exists between transmitter and receiver.
  (ii) There is an instant-start type (inverter type, etc.) fluorescent lamp in the room.
- Air conditioner might not work correctly when strong light hits the signal receiver window. Shut off the direct sunlight and also keep the illuminator far away from the receiver window.

■ DIMENSIONS

(Unit : mm)

● Controller

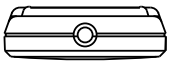

Top View

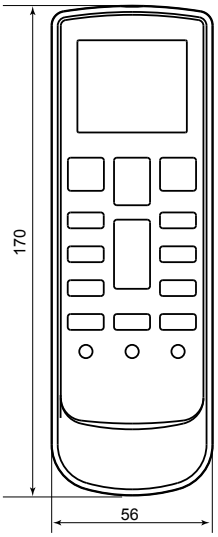

Front View



Side View

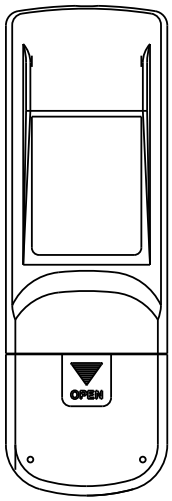

Rear View

● Holder

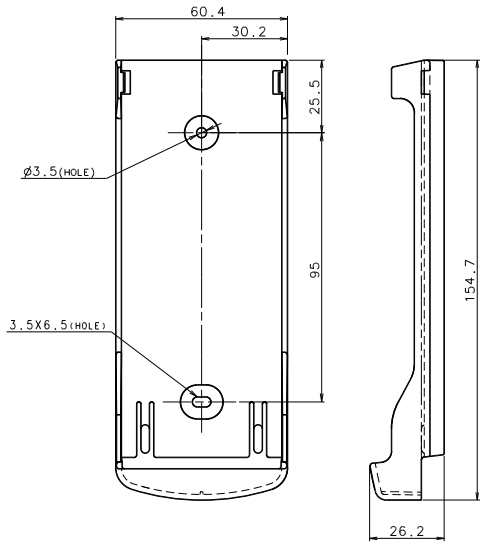

Front View Side View Bottom View

CONTROL SYSTEM

■ PACKING LIST

Name and shape	Quantity	Application
Installation manual 	1	
Operating manual 	1	
Remote controller holder 	1	Use as remote controller holder
Screw (M3 x 12mm) 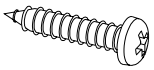	2	For remote controller holder installation
Battery [1.5V (R03 / AAA)] 	2	For remote controller

■ SPECIFICATIONS

Model name	UTY - LNH∗
Dimensions [H x W x D] (mm)	170 x 56 x 19
Weight (g)	85 (w/o batteries)

CONTROL SYSTEM

2-10. IR RECEIVER UNIT (for ALL DUCT TYPE)

■ MODELS : UTB - ∗WC

■ FEATURES



Duct type indoor unit can be controlled with wireless remote controller if the IR receiver unit is used.

■ FUNCTIONS

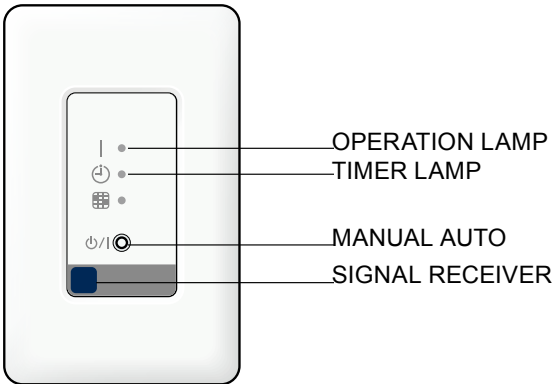

■ SYSTEM DIAGRAM

● ATTACHMENT RANGE

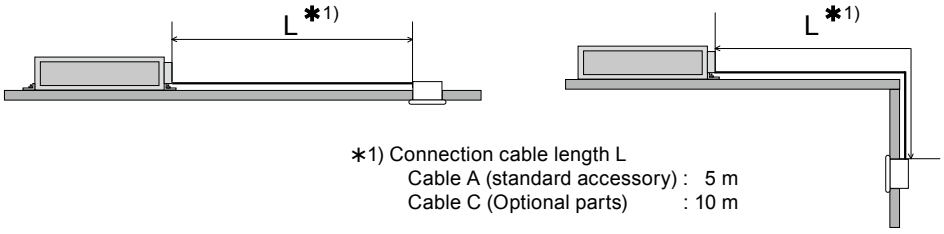

∗1) Connection cable length L
Cable A (standard accessory) : 5 m
Cable C (Optional parts) : 10 m

● SIGNAL ANGLE

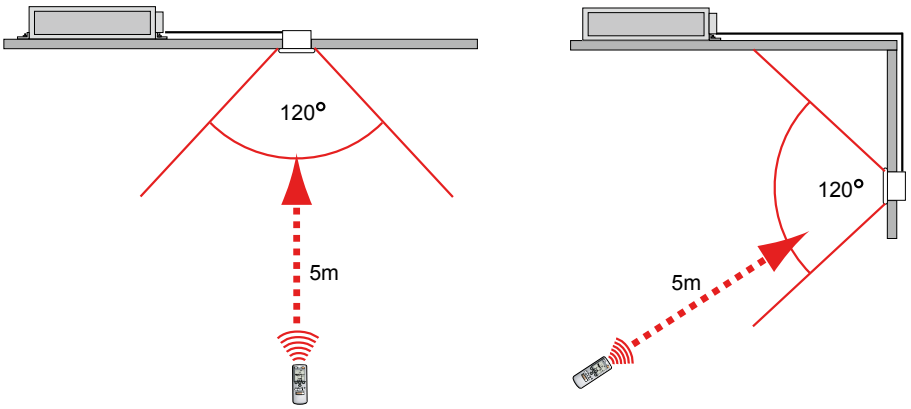

CONTROL SYSTEM

■ ELECTRICAL WIRING

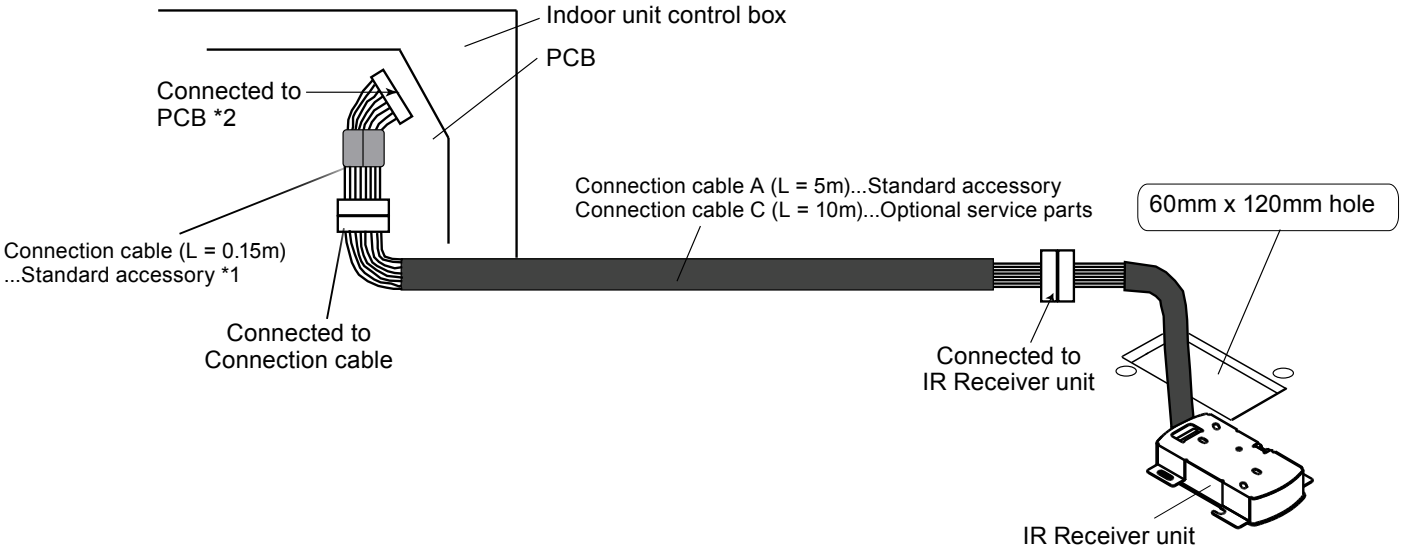

Connection cable to use by each model type is different, refer to the following.

Model type	Low Static Pressure Duct, Medium Static Pressure Duct, High Static Pressure Duct	Slim Duct
*1 Connection cable	Connection cable B	Connection cable D
*2 Connected to PCB	CN13	CN18

CONTROL SYSTEM

■ DIMENSIONS

(Unit : mm)

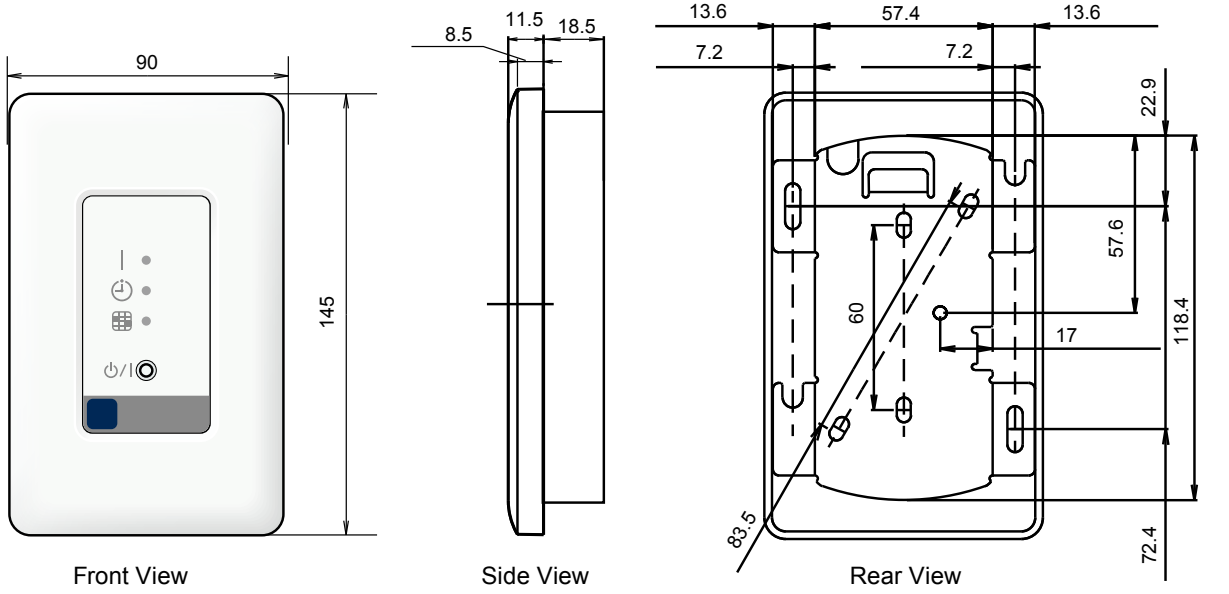

Front View Side View Rear View

■ PACKING LIST

Name and shape	Quantity	Application
Installation manual 	1	
Cover 	1	For receiver unit
Insulation 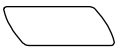	1	For receiver unit
Binder 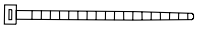	Small:1 Medium:1	For receiver unit
Screw (M4 x 20mm) 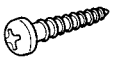	2	For installing receiver unit to wall, etc.
Screw (M4 x 12mm) 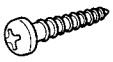	1	For attaching the hook metal to the holder cover
Screw (M4 x 10mm) 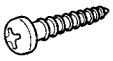	2	For attaching the hook metal to the indoor unit
Connection cable A (5m) 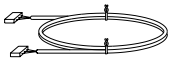	1	For connecting PCB of indoor unit to receiver unit
Connection cable B (0.15m) 	1	For Low Static Pressure Duct, Medium Static Pressure Duct, and High Static Pressure Duct type
Connection cable D (0.15m) 	1	For Slim Duct type
Hook metal 	1	For installing receiver unit to indoor unit
Bracket (cover) 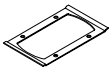	1	For receiver unit

■ SPECIFICATIONS

Model name	UTB - ∗WC
Dimensions [H x W x D] (mm)	145 x 90 x 30
Weight (g)	150

■ OPTIONAL SERVICE PARTS

Please use the parts number shown below to order the cable from your sales representative.
Select shielded type conncetion cable in accordance with the standard of the country.

Name and shape	Type	Parts No.
Connection cable C (10m) 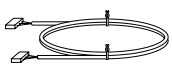	Non-shielded	9378143012
	Shielded	9378143036

CONTROL SYSTEM

2-11. IR RECEIVER UNIT (for CASSETTE TYPE)

■ MODEL : UTY - LRH∗B1

■ FEATURES



Cassette type indoor unit can be controlled with wireless remote controller if the IR receiver unit is used.

■ FUNCTIONS

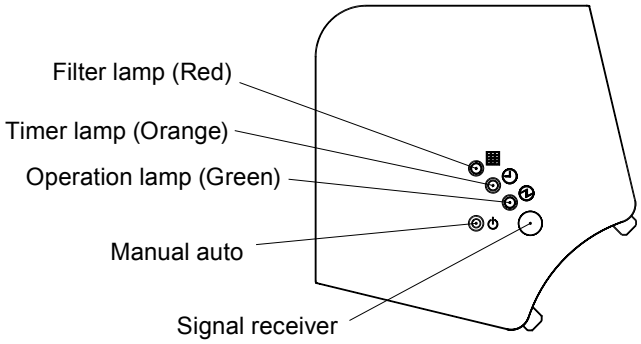

■ ELECTRICAL WIRING

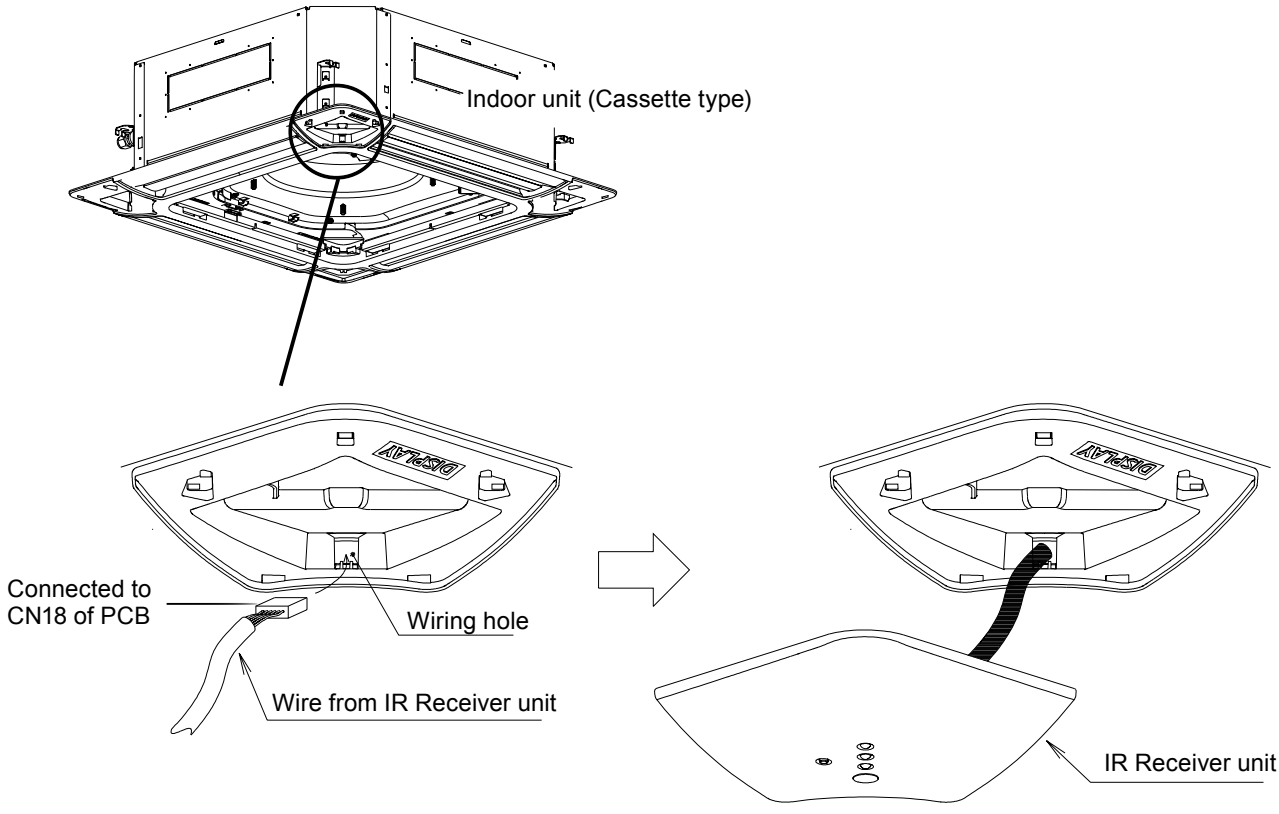

CONTROL SYSTEM

■ DIMENSIONS

(Unit : mm)

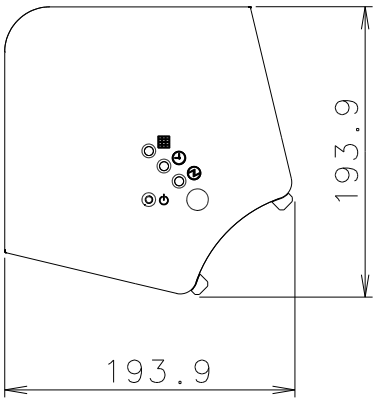

Front View

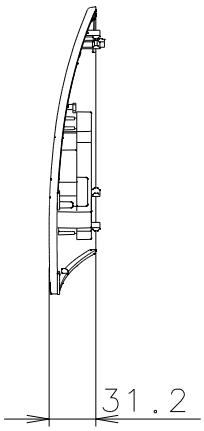

Side View

■ PACKING LIST

Name and shape	Quantity	Application
Installation manual	1	
Strap	1	Prevent receiver kit from falling down

CONTROL SYSTEM

■ SPECIFICATIONS

Model name	UTY - LRH∗B1
Dimensions [H x W x D] (mm)	193.9 x 193.9 x 31.2
Weight (g)	140

2-12. REMOTE SENSOR UNIT

■ MODEL : UTY-XSZX

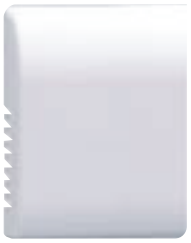

■ FEATURES

New amenity space can be offered by installing the Remote sensor.

■ ELECTRICAL WIRING

- Remove the screws from the remote sensor, and remove the cover.
- Connect the cable to the remote sensor as shown below.
- Ensure that the wires do not contact each other.

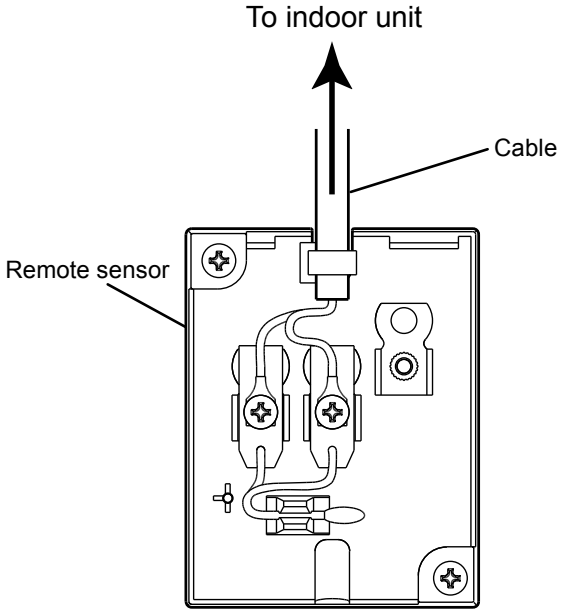

■ INSTALLATION

● When the cable is attached to the wall

- Remove the material covering the wiring penetration (thin material) in the cover of the sensor unit with a pair of cutters. The cable passes through this hole.
- Now attach the remote sensor on the wall using the screws.

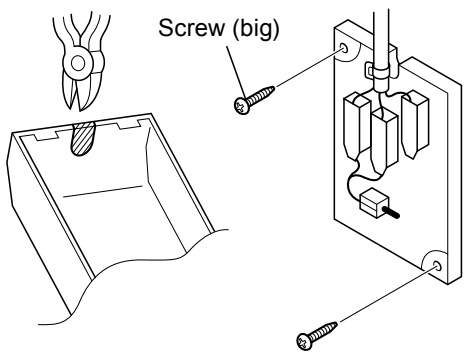

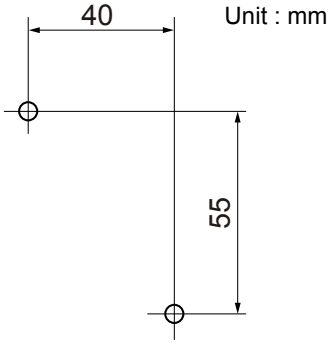

Mounting hole dimensions

CONTROL SYSTEM

● When the cable is buried in the wall

- Remove the material (thinner than the surrounding material) in the wiring hole in the remote sensor using a pair of cutters.
- Drill a hole in the wall for the cable.
- Seal the area around the cable penetration with putty.

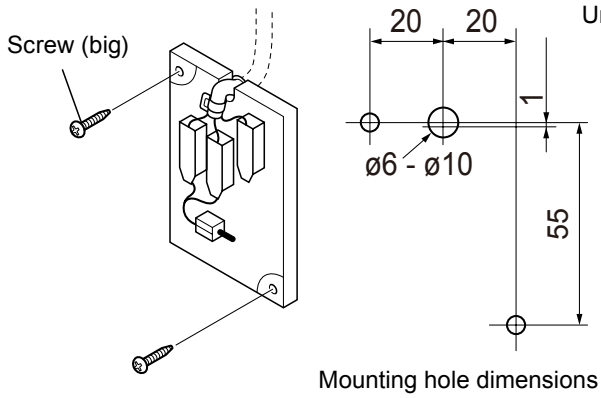

Mounting hole dimensions

● Finish

- Fit the cover on the remote sensor and screw it in place.

CONTROL SYSTEM

■ DIMENSIONS

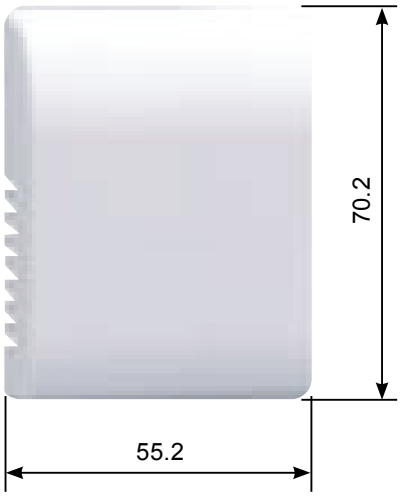

■ PACKING LIST

Name and shape	Quantity	Application
Installation manual	1	
Cable (10m)	1	
Screw (M4 x 16mm)	2	
Screw (M4 x 10mm)	2	
Cord clamp	1	

2-13. GROUP CONTROL METHOD

■ REMOTE CONTROLLER GROUP

Wired, Simple and Wireless Remote Controllers can be used jointly in the following combinations.

Example of combination for "Remote controller group"

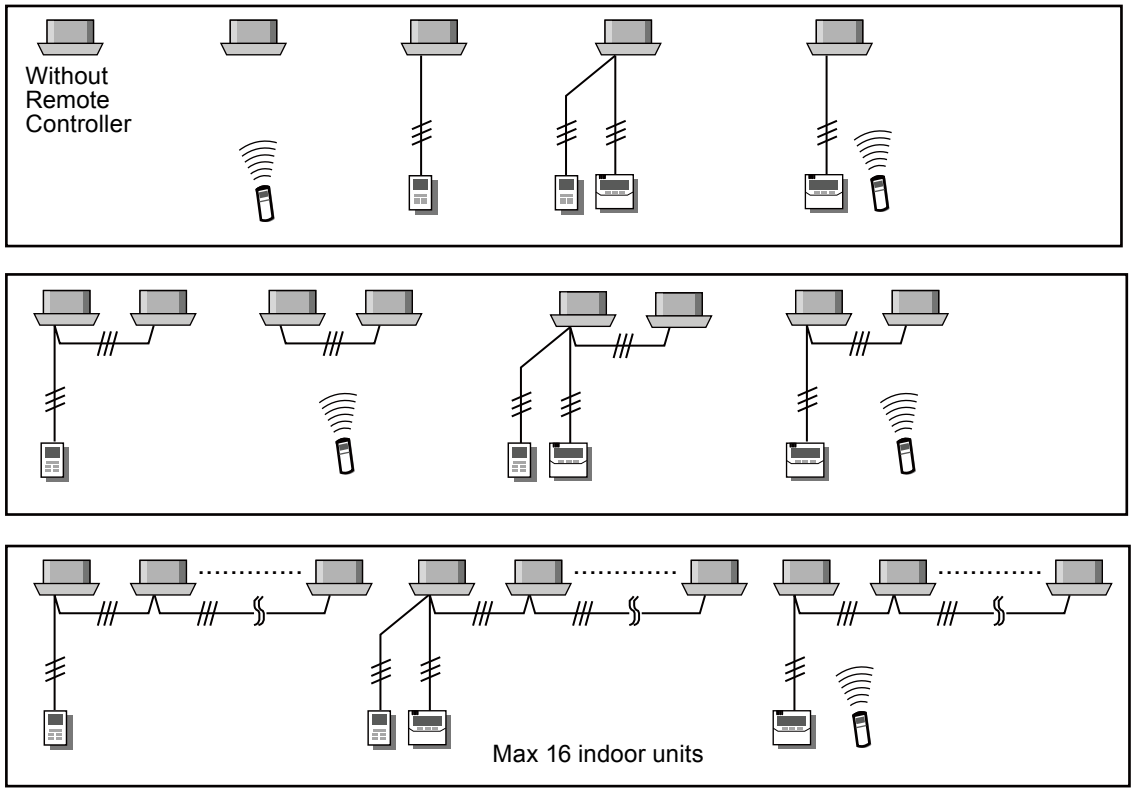

Connectable indoor unit : 1-16
Connectable remote controller : 0 - 2

● **Note**

1. Indoor units in same remote controller group will conduct the same operation.
2. When using 2 remote controllers.
   - Last command is priority. (Operation mode might be fixed by system operation.)
   - Timer setting function may become invalid from slave remote controller or Wireless Remote Controller.

CONTROL SYSTEM

■ GROUP

This function is used when operating a multiple number of remote controller group at a time from the System Controller or Touch Panel Controller or Central Remote Controller.

● Example

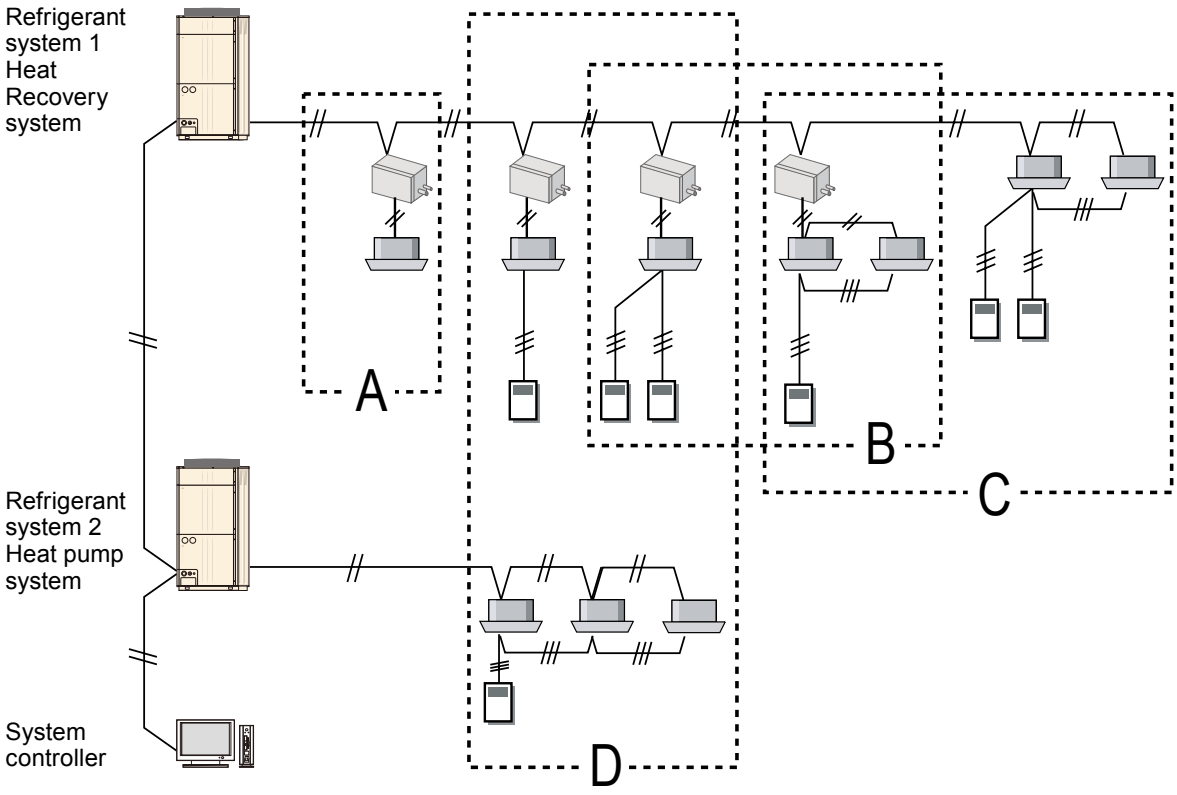

Group A: "Group" is possible with only one indoor unit
Group B:"Group" is possible with spanning the RB groups.
Group C:"Group" is possible with spanning the RB group and indoor unit of cooling only type.
Group D:"Group" is possible with spanning the refrigerant systems.

- The contents of a setting may not be reflected by operational status. (B, C, D group)

CONTROL SYSTEM

2-14. COMPARISON TABLE OF CONTROLLERS

■ LIST OF CONTROLLER FUNCTION

Item		System Controller	Touch Panel Controller	Central Remote Controller	Group Remote Controller	Wired Remote Controller (Touch panel)	Wired Remote Controller	Simple Remote Controller	Simple *1 Remote Controller	Wireless Remote Controller
Model		UTY-APGX	UTY-DTG∗	UTY-DCG∗	UTY-CGG∗	UTY-RNR∗	UTY-RNK∗	UTY-RSK∗	UTY-RHK∗	UTY-LNH∗
Max. controllable remote controller groups		1600	400	100	8	1	1	1	1	1
Max. controllable indoor units		1600	400	100	*2	16	16	16	16	16
Max. controllable groups		1600	400	16	-	-	-	-	-	-
Air conditioning control function	On / Off	●	●	●	●	●	●	●	●	●
	Operation mode setting	●	●	●	●	●	●	●	-	●
	Fan speed setting	●	●	●	●	●	●	●	●	●
	Room temp. setting	●	●	●	●	●	●	●	●	●
	Room temp. set point limitation	●	●	●	-	●	-	-	-	-
	Test operation	-	●	●	-	●	●	●	-	●
	Up / down air direction flap setting	●	●	●	-	●	●	-	-	●
	Right / left air direction flap setting	●	●	●	-	●	●	-	-	●
	Group setting	●	●	●	-	-	-	-	-	-
	RC prohibition	●	●	●	-	-	-	-	-	-
	Anti freeze setting	●	●	●	-	●	-	-	-	-
	Setback cool/heat	-	-	-	-	○	-	-	-	-
	Economy mode setting	●	●	●	-	●	●	-	-	●
Display	Failure	●	●	●	●	●	●	●	●	-
	Defrosting	●	●	●	-	●	●	●	●	-
	Current time	●	●	●	●	●	●	-	-	●
	Day of week	●	●	-	●	●	●	-	-	-
	R.C. prohibition	●	●	●	●	●	●	●	●	-
	Cooling / heating priority	●	●	●	●	●	●	●	●	-
	Address display	●	●	●	●	●	●	●	●	-
	Room temp	-	-	-	-	●	-	-	-	-
	Multi language	●	●	●	-	●	-	-	-	-
	Summer time	●	●	●	-	●	-	-	-	-
	Name registration	●	●	●	-	●	-	-	-	-
	Backlight	-	●	●	-	●	-	●	●	-

*1: "Operation mode" setting is not available for this model.
*2: Up to 2 refrigerant system.
●: Supported, ○: Supported soon, -: Not supported yet

CONTROL SYSTEM

Item			System Controller	Touch Panel Controller	Central Remote Controller	Group Remote Controller	Wired Remote Controller (Touch panel)	Wired Remote Controller	Simple Remote Controller	Simple *1 Remote Controller	Wireless Remote Controller
Model			UTY-APGX	UTY-DTG∗	UTY-DCG∗	UTY-CGG∗	UTY-RNR∗	UTY-RNK∗	UTY-RSK∗	UTY-RHK∗	UTY-LNH∗
Timer	Schedule timer	Period	Year	Year	Week	Week	Week	Week	-	-	-
		On/Off, Temp, mode, times per day	144	20	20	4	8	4	-	-	-
	On / Off timer		-	-	-	-	●	●	-	-	●
	Sleep timer		-	-	-	-	-	-	-	-	●
	Program timer		-	-	-	-	-	-	-	-	●
	Auto off timer		-	-	-	-	●	-	-	-	-
	Day off		●	●	●	-	●	●	-	-	-
	Min. unit of timer setting (Minutes)		10	10	10	10	10 - 30	30	-	-	5
Control	Status monitoring system		●	●	●	-	-	-	-	-	-
	Electricity charge calculation		●	-	-	-	-	-	-	-	-
	Error history		●	●	●	●	●	●	●	●	-
	Emergency stop		-	●*3	●*3	-	-	-	-	-	-
	Control via internet		●	-	-	-	-	-	-	-	-
	E-mail notiffication for malfunction		●	-	-	-	-	-	-	-	-
	Key lock		● Password setting	● Password setting	● Password setting	● Child lock	● Child lock	-	-	-	-

*1: "Operation mode" setting is not available for this model.
*3: This function is available only through external input control.
●: Supported, ○: Supported soon, -: Not supported yet

CONTROL SYSTEM

3. ADAPTOR / CONVERTOR UNITS

The following types of convertors and adaptors are available.

- **Network Convertor (UTY-VGGXZ1)**
  1. For connecting single split type system.
     (A change of DIP switch setting is necessary)
  2. For connecting group remote controller(s).
- **Network Convertor for LonWorks® (UTY-VLGX)**

  For connection between VRF network system and a LonWorks® open network for management of small to medium-sized BMS.
- **BACnet Gateway (UTY-ABGX : Software)**

  The central control of maximum 1600 indoor units can be realized by connecting the VRF network system to the BACnet, a global standard for open networks.
- **Signal Amplifier (UTY-VSGXZ1)**

  When the total length of transmission line exceeds 500m or the number of units exceeds 64, Signal amplifier will be necessary.
- **External Switch Controller (UTY-TEKX)**

  Air conditioner switching can be controlled by connecting other sensor switches.

CONTROL SYSTEM

3-1. NETWORK CONVERTOR

■ MODEL : UTY - VGGXZ1

1. For connecting single split type system

[A change of DIP switch setting is necessary]

■ FEATURES



- With this network convertor, single split type and multi system air conditioners can be controlled by Touch panel controller, System controller in VRF network system or by wired remote controller that is connected to the Network convertor.
- Start/Stop, operation mode, temperature setting, fan speed, etc. can be done with these controllers.
- One Network convertor can be connected and controlled up to 16 indoor units.
- 2 wired remote controllers are possible for one network convertor.
- Up to 100 network convertors can be connected in one VRF network system. (One Network convertor is regarded as one refrigerant system. The total refrigerant systems in one VRF network system must be within 100.)

■ FUNCTIONS

●Start/Stop ●Temperature control ●Operation mode ●Timer setting

●Fan control ●Central control (Lock the remote controller functions)

■ SYSTEM DIAGRAM

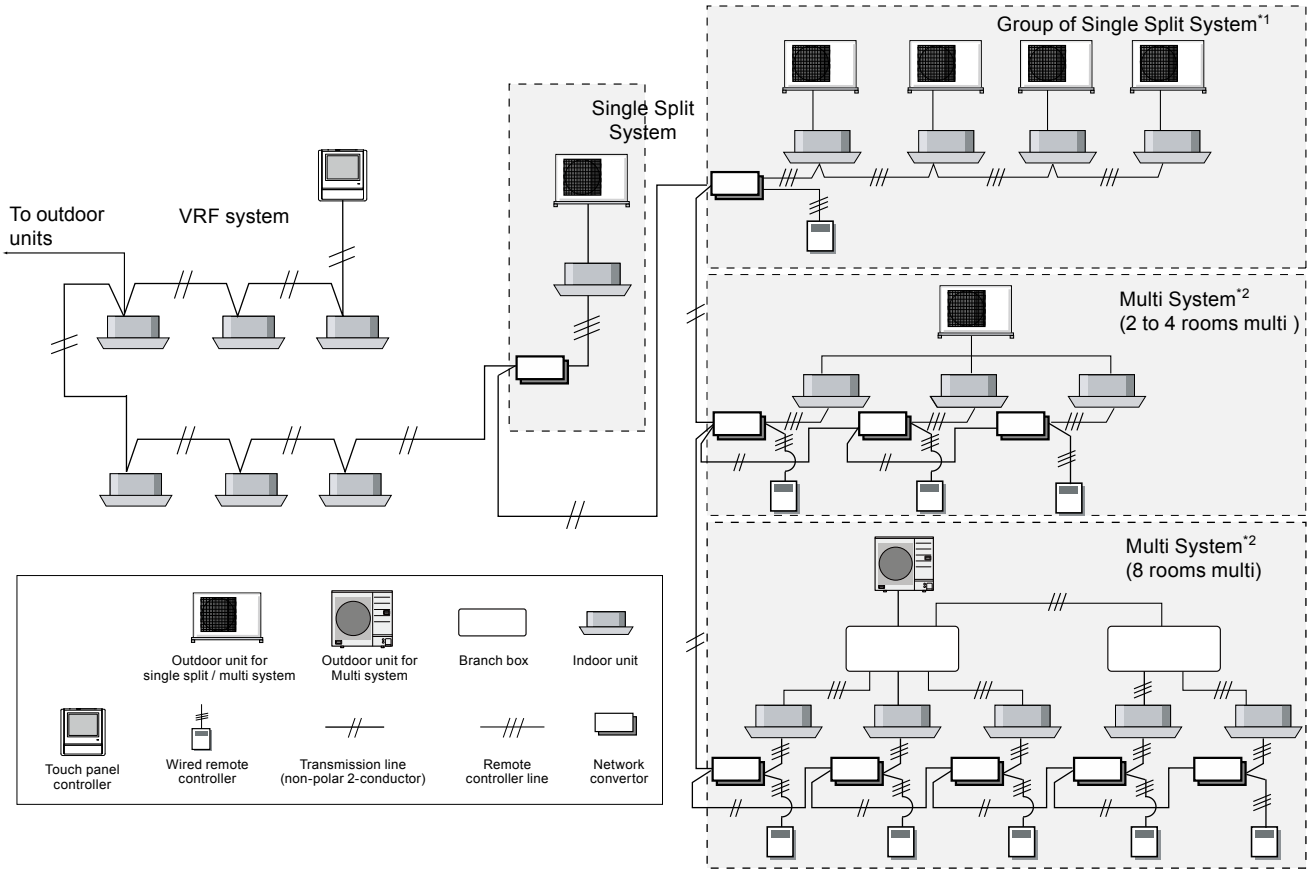

*1 : All indoor units connected to a network convertor are operating under same status.

*2 : Network convertor is necessary for each indoor unit to control indoor unit individually.

CONTROL SYSTEM

■ ELECTRICAL WIRING

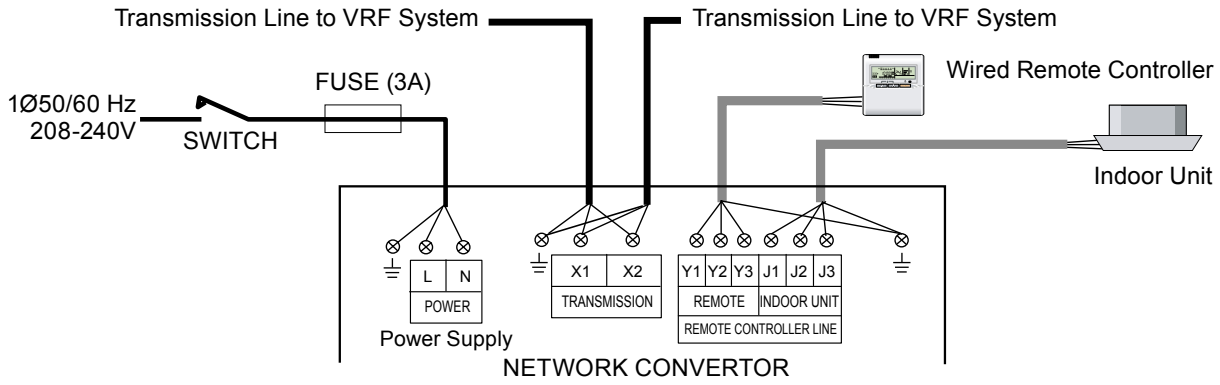

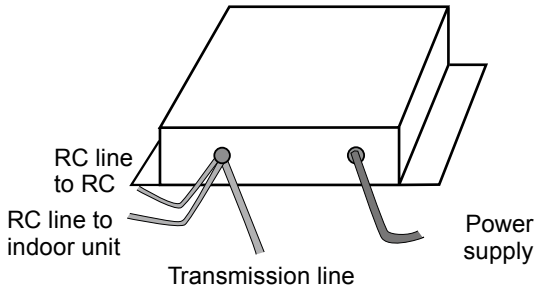

Note :
- Do not bind the power cable and remote controller cable to avoid an erroneous operation.
- Use shield cable for transmission line and remote controller line. The shield metal should be grounded.
- Use ground wire to ground the network convertor.

CONTROL SYSTEM

■ APPLICABLE MODELS

		○
Single Split type	Wired Remote Controller model	○
	Wireless Remote Controller model	×

● Connectable remote controllers

3 types of wired remote controller shown in the table below can be connected to this unit.

Model name	RC number
UTB-∗UB *1	AR-3TA∗∗
UTB-∗UD *1	AR-6TC∗∗
UTY-RNN∗M *1	AR-WAE∗∗

(∗ arbitrary character)

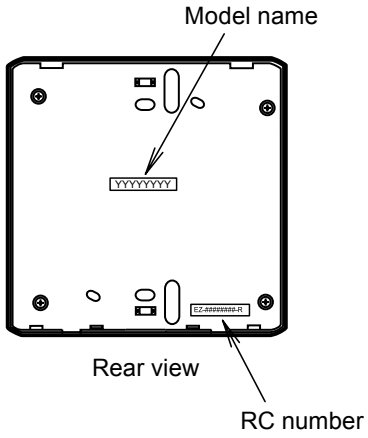

● Connectable indoor units

Indoor units that accept following wired remote controllers (accessories or optional parts) are connectable with this unit.

RC number
AR-3TA∗∗, AR-6TC∗∗, AR-WAE∗∗
EZ-099DHSE-R, EZ-000DHSE-R, EZ-0001HSE-R, EZ-000GHSE-R, EZ-00004HSE-R, EZ-00005HSE-R, EZ-0015HSE-R, EZ-0019HSE-R, EZ-099DHSEFR, EZ-0001HSEFR, EZ-000DHSEFR, EZ-000GHSEFR, EZ-0015HSEFR EZ-0994HSE-R, EZ-000EHSE-R, EZ-0994HSEFR EZ-099CWSE-R, EZ-000AWSE-R, EZ-0001WSE-R, EZ-000FWSE-R, EZ-0012WSE-R, EZ-099CWSEFR, EZ-0001WSEFR, EZ-000AWSEFR EZ-09906WSE-R, EZ-000BWSE-R, EZ-09906WSEFR

EZ type remote controllers cannot control indoor units via this unit. When you want to operate indoor units directly by remote controller, the optional remote controller (*1) must be purchased.

CONTROL SYSTEM

2. For connecting group remote controller(s)

■ FEATURES

- Up to a total of 16 network convertors, Central remote controller and Touch panel controller can be connected in one VRF network system.
- Four group remote controllers can be connected to one network convertor.
- Two refrigerant systems can be covered by one network convertor.

■ SYSTEM DIAGRAM

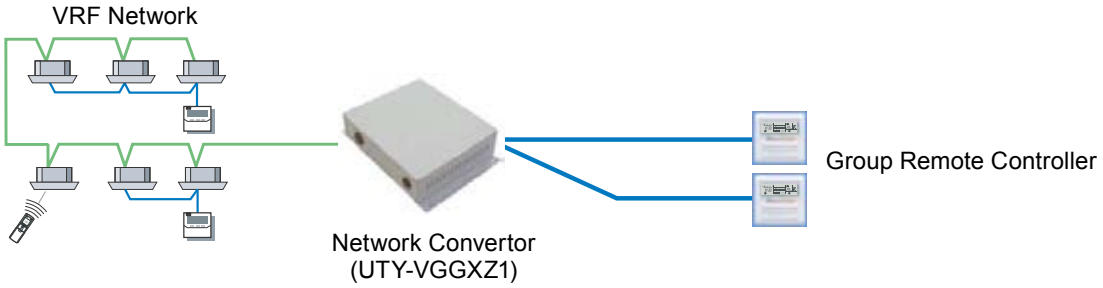

■ ELECTRICAL WIRING

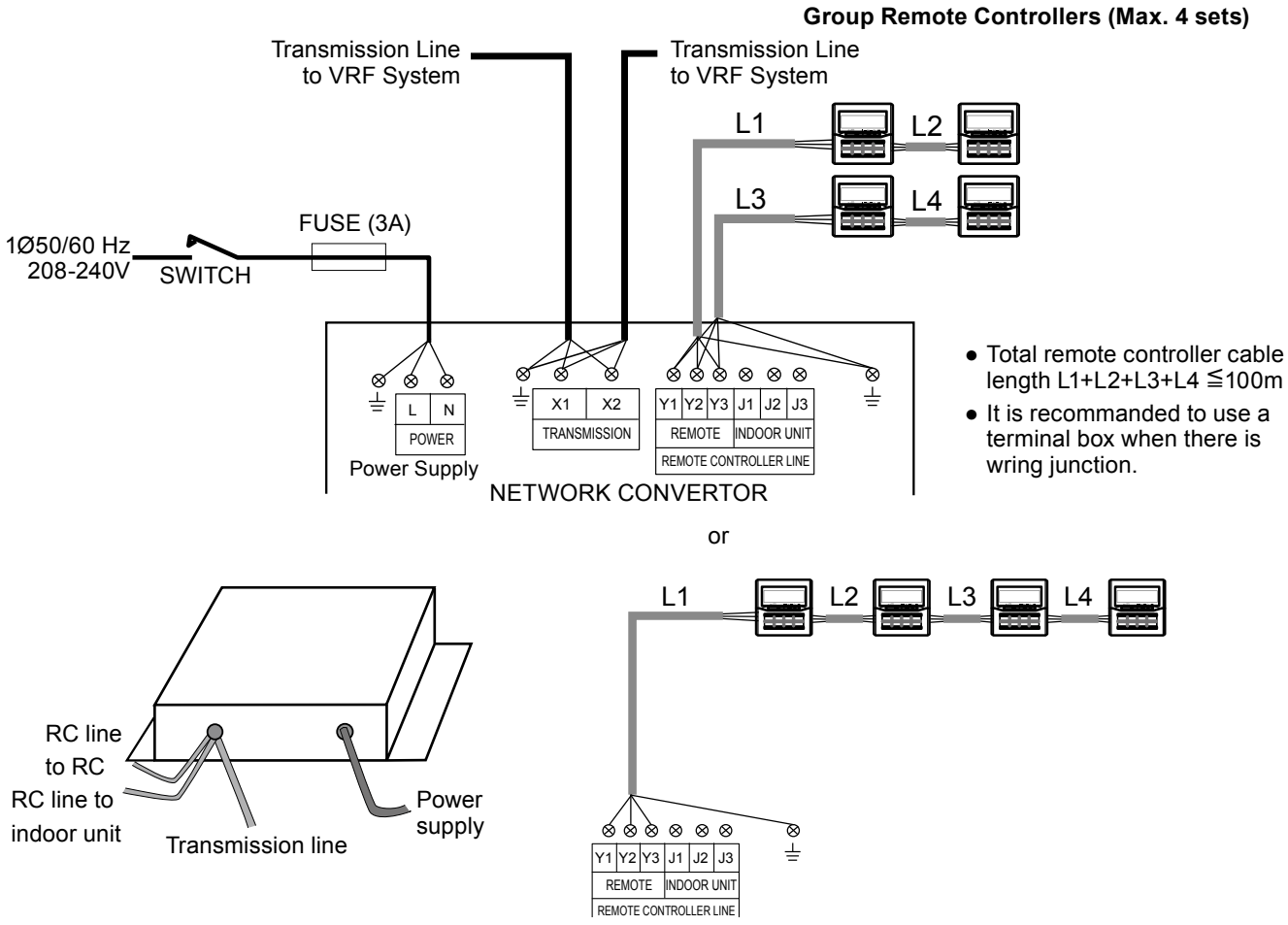

- Total remote controller cable length L1+L2+L3+L4 ≦100m
- It is recommanded to use a terminal box when there is wring junction.

Note :

- Do not bind the power cable and remote controller cable to avoid an erroneous operation.
- Use shield cable for transmission line and remote controller line. The shield metal should be grounded.
- Use ground wire to ground the network convertor.

■ DIMENSIONS

(Unit : mm)

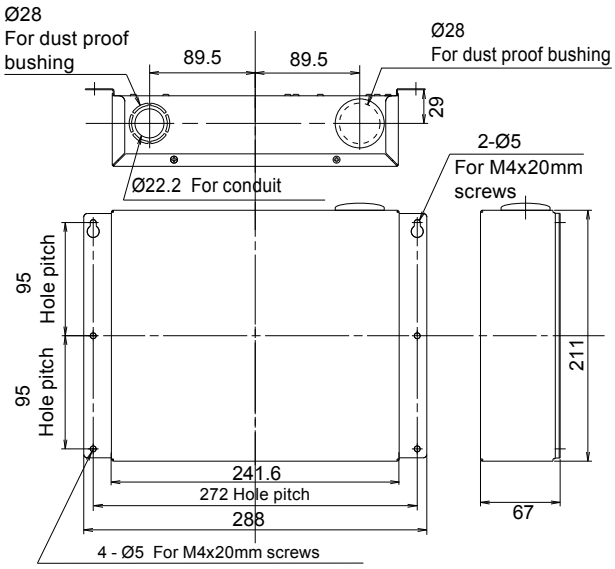

■ PACKING LIST

The following installation parts are supplied. Use them as required.

Name and shape	Quantity	Application
Installation manual	1	
Cable tie	4	For mounting the power supply cable, remote controller cable and transmission cable.
Screw (M4 x 20mm)	4	For mounting the network convertor.
Dust proof bushing	1	For connecting the power supply cable.

■ WIRING SPECIFICATIONS

Use	Size		Wire type	Remarks
Power supply cable	Maximum	1.25mm^2	60245 IEC 57 or equivalent	1 ø AC208 - 240 V 50/60Hz, 2 Wire + ground (Always ground the unit)
	Minimum	0.5mm^2		
Transmission cable	0.33mm^2 (22AWG)		LEVEL4 (NEMA) non-polar 2 core, twisted pair solid core Shielded	LONWORKS® compatible cable
Remote controller cable	0.33mm^2 (22AWG)		Polar 3 core	Use sheathed PVC cable or shielded cable in accordance with the regional cable standard.
External input / output cable	0.33mm^2 (22AWG)		Polar 2core, Twisted pair	Use shielded cable in accordance with the regional cable standard.
Fuse capacity	3A			

■ SPECIFICATIONS

Power supply		1ø AC208 - 240V 50/60Hz
Input Power (W)		6.5
Temperature(°C)	Operating	0 to 46
	Packaged	-10 to 60
Humidity (%)	Packaged	0 to 95 (RH) ; No condensation
Dimensions (H x W x D) (mm)		67 x 288 x 211
Weight (g)		1500

CONTROL SYSTEM

3-2. NETWORK CONVERTOR FOR LONWORKS®

■ MODEL : UTY - VLGX



■ FEATURES

- The convertor for connecting VRF network system to the BMS system built by LONWORKS® open network, for manage small to medium sized BMS and VRF network system.
- A maximum of 128 indoor units can be connected to one Network Convertor for LONWORKS®.
- VRF system can be centrally controlled or monitored from BMS via UTY-VLGX.
- A maximum of 4 Network Convertor for LONWORKS® can be connected to one BMS.

■ SYSTEM DIAGRAM

● Proper system diagram

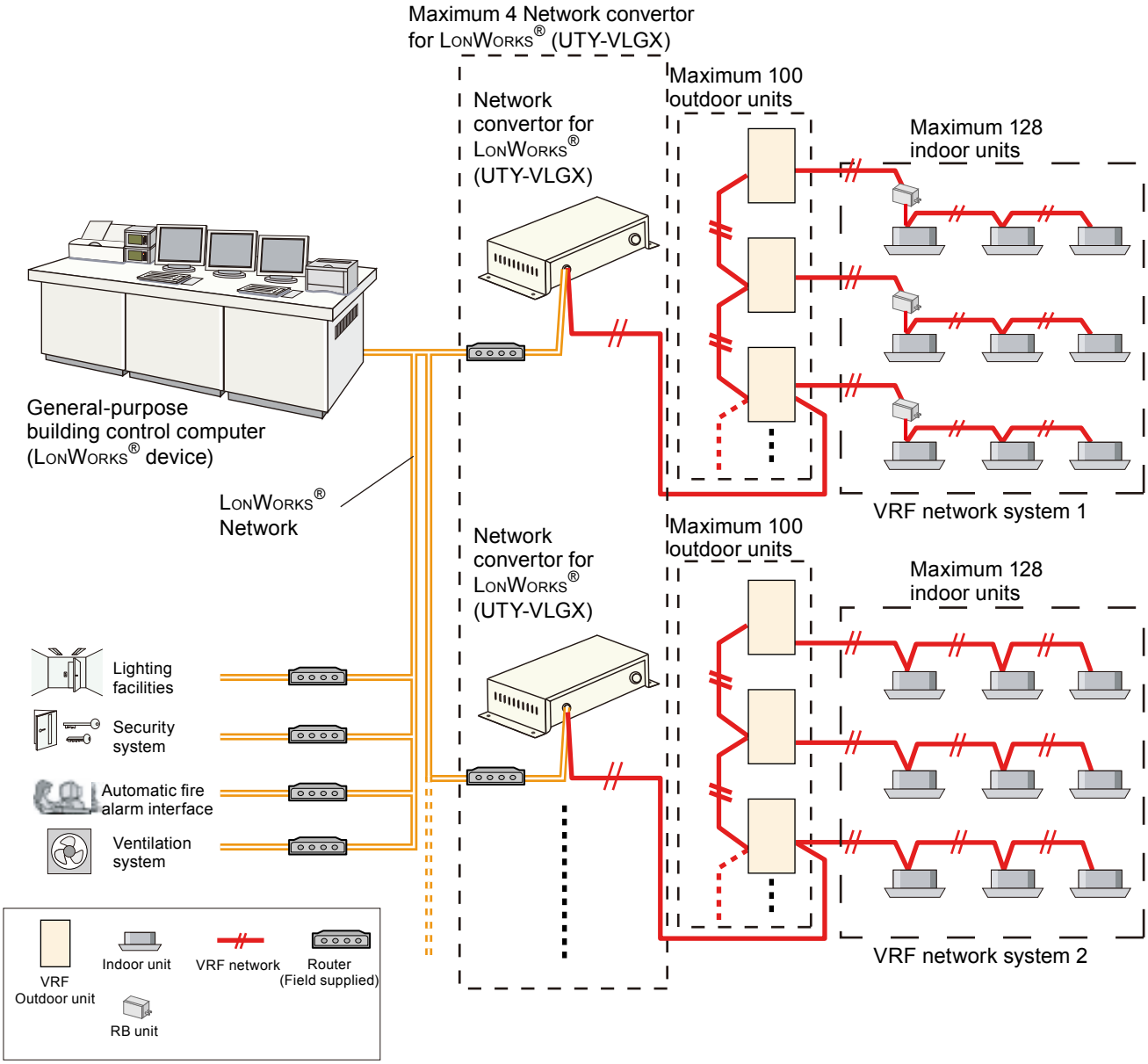

CONTROL SYSTEM

● Improper system diagram

• Example 1 (Prohibited)

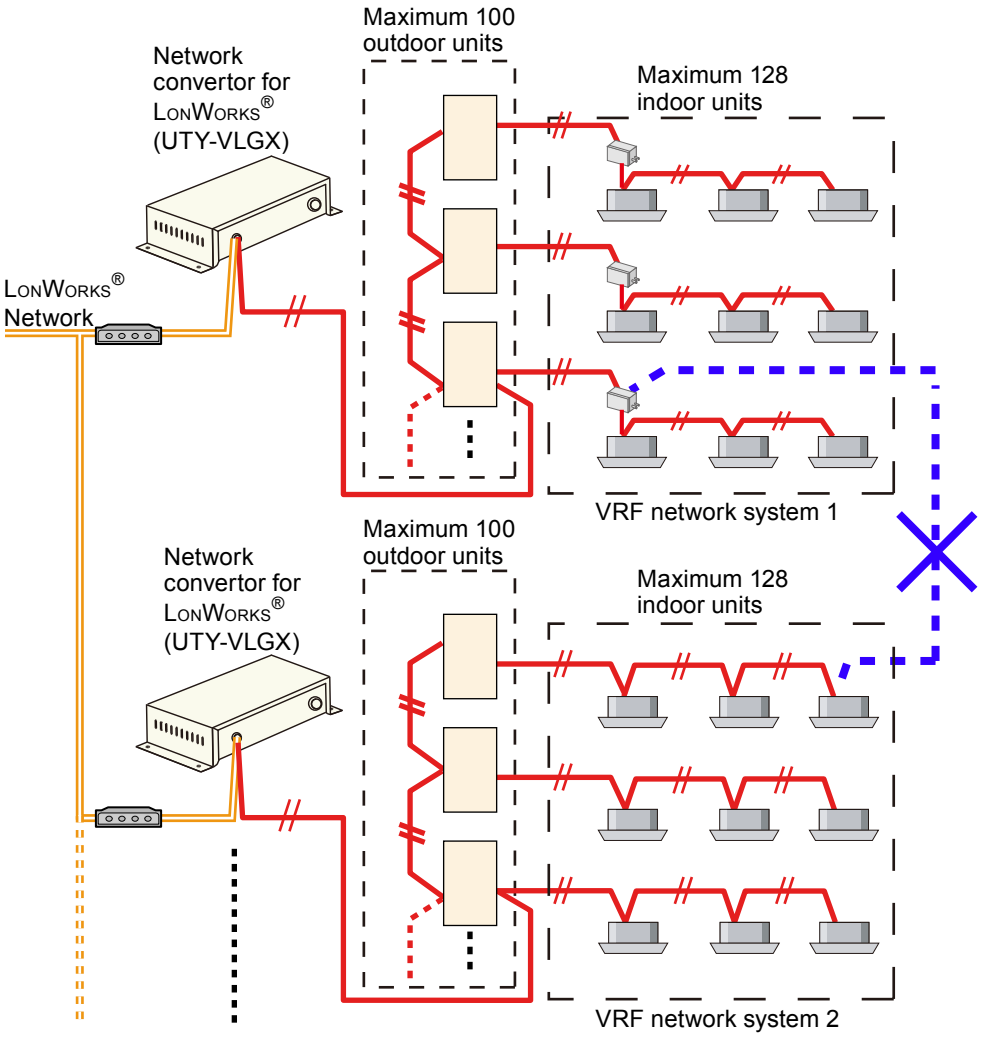

• Example 2 (Prohibited)

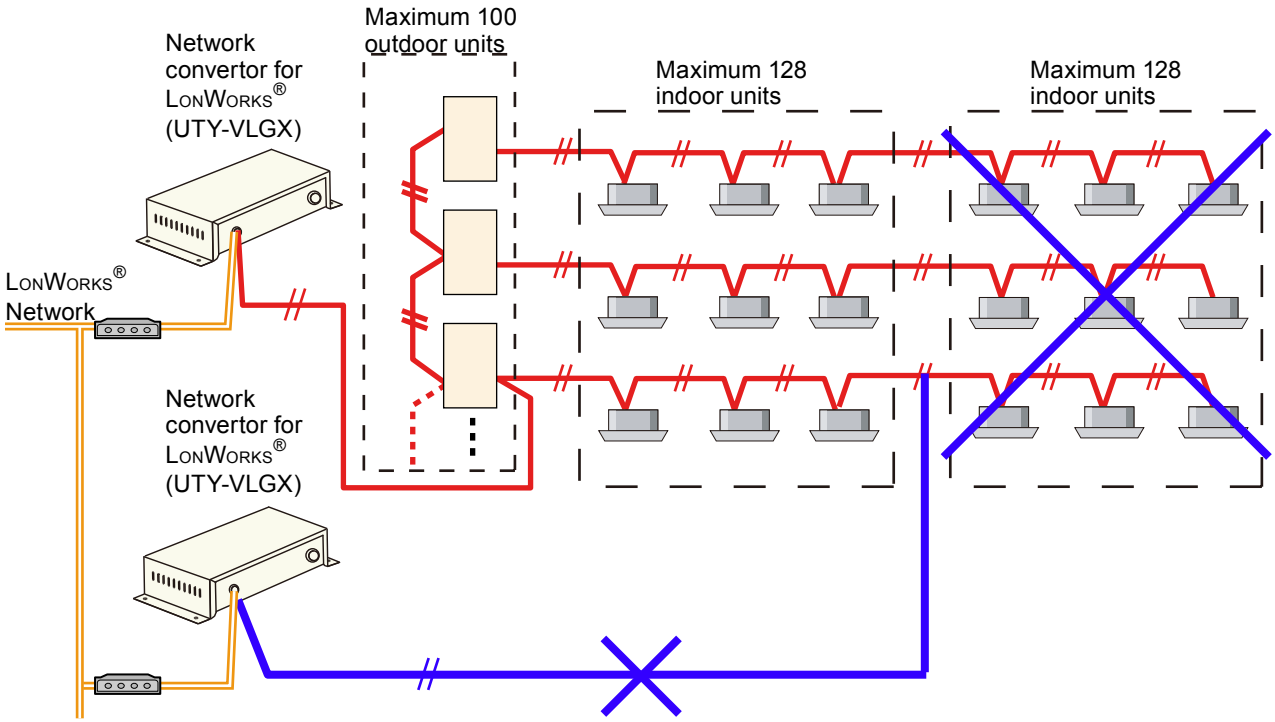

■ FUNCTIONS

● Indoor unit control

● Individual control

Commands from LONWORKS® Network are sent to the respective indoor units. (LONWORKS® Network → respective indoor units of VRF Network)

● Batch control

Commands from LONWORKS® Network are sent to all indoor units connected to VRF Network. (LONWORKS® Network → All indoor units of VRF Network)

● Indoor unit status monitoring

Indoor unit status is communicated to the LONWORKS® Network in the form of LON® Network variables. (LONWORKS® Network ← All indoor units of VRF Network)

CONTROL SYSTEM

■ CONTROL AND MONITORING ITEMS

Note: For detailed information, please check the Interface Specification.

Item	Function	Description
Indoor Unit Control (Individual / Batch)	ON/OFF Command	Start / Stop operation
	Operation Mode Setting	Cooling / Heating / Auto / Fan / Dry
	Temperature Setting	Set room temperature
	Airflow Mode Setting	Set airflow
	Set Point Temperature Limit Setting	Set room temperature lower limit (for cooling mode) & room temperature upper limit (for heating mode)
	Thermostat Off setting	Thermostat off (Only one controller in VRF Network System can do this)
	Centrally Control (Filter Reset)	Prohibition of filter sign reset of remote controller
	Centrally Control (All Mode)	Prohibition of all mode of remote controller
	Centrally Control (Timer Mode)	Prohibition of timer mode of remote controller
	Centrally Control (Set Temperature Mode)	Prohibition of set temperature mode of remote controller
	Centrally Control (ON/OFF Mode)	Prohibition of ON/OFF mode of remote controller
	Centrally Control (ON Mode)	Prohibition of ON mode of remote controller
	Centrally Control (Operation Mode)	Prohibition of operation mode of remote controller
Indoor Unit Control (Individual)	Filter Sign Reset	Set filter sign reset command
	Antifreeze Setting	Set antifreeze command
	Energy Save Mode Setting	Set energy save command
Indoor Unit Control (Batch)	Emergency STOP Setting	Set Emergency STOP command
	Time Setting	Set time setting command (The controllers those are connected in VRF Network System are an object)
Indoor Unit Monitoring (Individual)	ON/OFF Status	ON / OFF status
	Operation Mode Setting Status	Heating / Cooling / Auto / Fan / Dry mode status
	Temperature Setting Status	Room set temperature status
	Airflow Mode Setting Status	Airflow mode status
	Set Point Temperature Limit Status	Room set temperature limit status
	Thermostat Off Setting Status	Thermostat off set value status
	Centrally Control (Filter Reset) Status	Remote controller filter reset prohibition status
	Centrally Control (All Mode) Status	Remote controller all mode prohibition status
	Centrally Control (Timer Mode) Status	Remote controller timer mode prohibition status
	Centrally Control (Set Temperature) Status	Remote controller set temp. prohibition status
	Centrally Control (ON/OFF) Status	Remote controller ON / OFF prohibition status
	Centrally Control (ON) Status	Remote controller ON prohibition status
	Centrally Control (Operation) Status	Remote controller operation prohibition status
	Antifreeze Setting Status	Antifreeze set status
	Energy Save Mode Setting Status	Energy save mode set status
	Filter Sign Reset Status	Filter sign reset status
	Room Temperature Status	Room temperature status
	Alarm Code Status	Only one Alarm Code status can be monitored
	Operation Mode restriction Status	Restriction item (*1) can be monitored
Indoor Unit Monitoring (Batch)	Maintenance Mode Status	Maintenance status
	Emergency STOP Setting Status	Emergency STOP setting status
Outdoor Unit Monitoring (Individual)	Alarm Code Status	Alarm code status
Convertor Unit Monitoring (Individual)	Alarm Code Status	Alarm code status

*1: All operation setting, Timer setting, Room temperature setting, Operation mode setting, ON/OFF operation, Filter reset operation, On operation setting.

CONTROL SYSTEM

* To protect the compressor of the outdoor unit, please carefully read and understand the following cautions that may affect the operation of the compressor before executing the setting.
  - When performing periodical settings like schedule settings for the following functions, perform the setting to all the indoor units in the same refrigerant system simultaneously, conforming to the timing restriction described below.

<Corresponding function>

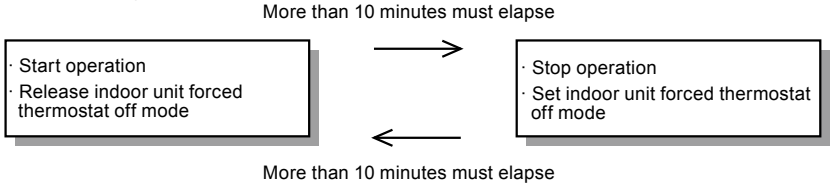

* Forced thermostat OFF instruction
  - Only one equipment can send these instructions for each refrigerant system.
  - When these instructions are sent by multiple equipments, the system may not respond asinstructed or may malfunction.

CONTROL SYSTEM

■ SPECIFICATIONS

● Operating environmental specifications

Power supply		1ø AC208 - 240V 50/60Hz
Input Power (W)		4.5
Temperature(°C)	Operating	0 to 46
	Packaged	-10 to 60
Humidity (%)	Packaged	0 to 95 (RH) ; No condensation
Dimensions (H x W x D) (mm)		67 x 288 x 211
Weight (g)		1500

● Transmission specifications

LonWorks® network	
Transmission speed	78kbps
Transceiver	FT-X1 (Echelon® Corporation)
Transmission way form	Free topology
Cable	Twisted pair cable (shield)
	22AWG Equivalent
Network connector	One terminal
Terminal resistor	None attachment (It attaches at the terminal of a network)

CONTROL SYSTEM

■ PACKING LIST

Name and shape	Quantity	Application
Installation manual 	1	Use during installation.
Cable tie 	3	For mounting the power supply cable and transmission cable.
Screw (M4 x 20mm) 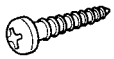	4	For mounting the network convertor.
CD-ROM 	1	Includes the software and manuals of Tool for network convertor.
Connector cable 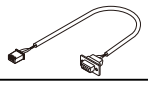	1	For initial setting.
Dust proof bushing 	1	For connecting the power supply cable.

■ PERSONAL COMPUTER SPECIFICATIONS

	Tool for Network Convertor (UTY-VLGX)
CPU	At compatible machine that runs Microsoft® Windows®
Memory	1GB(Vista, 7 & 8), 128MB(XP) or more
Display	1024 x 768 dots or more, High color (16bit) or more
Interface	Serial(RS232C) port (x1) *Please be sure to use "COM1"
Operating System	Microsoft® Windows® XP Professional (English version/Chinese version) Service pack 3 or later Microsoft® Windows® Vista Home Premium (English version/Chinese version) Service pack 1 or later Microsoft® Windows® 7 Professional (English version/Chinese version) Microsoft® Windows® 8 Pro (English version/Chinese version) * 64-bit version of Windows® are not supported.
Required Hardware	CD-ROM drive
Required Software	Adobe® Reader 9.0 or later

■ DIMENSIONS

(Unit : mm)

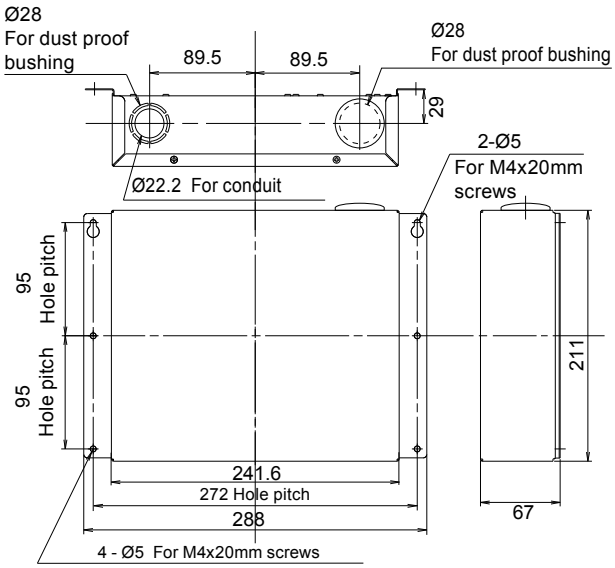

■ ELECTRICAL WIRING

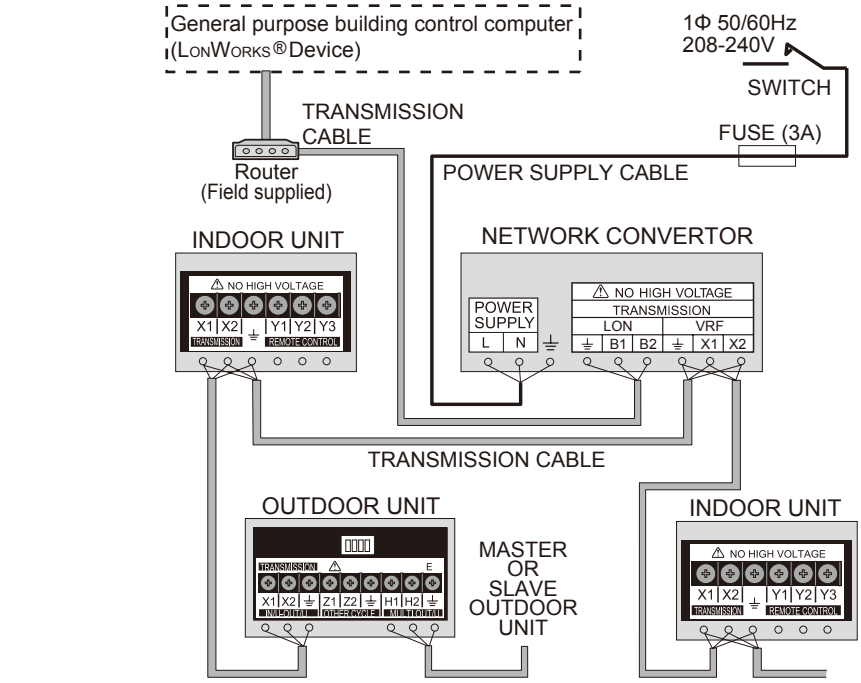

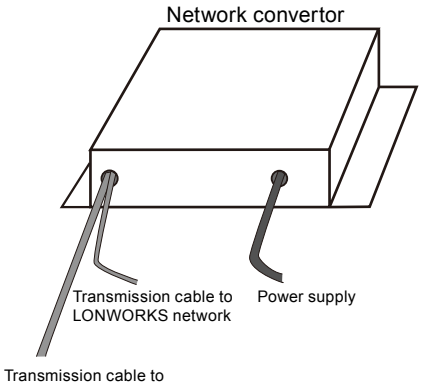

Note :

- Do not bind the power cable and transmission cable to avoid an erroneous operation.
- Use shield cable for transmission cable. The shield metal should be grounded.
- Do not forget to ground the Network Convertor.

■ WIRING SPECIFICATIONS

Use	Size		Wire type	Remarks
Power supply cable	Maximum	1.25mm^2	60245 IEC 57 or equivalent	1 ø AC208 - 240 V 50/60Hz, 2 Wire + ground (Always ground the unit)
	Minimum	0.5mm^2		
Transmission cable	0.33mm^2 (22AWG)		LEVEL4 (NEMA) non-polar 2 core, twisted pair solid core Shielded	LonWorks® compatible cable
Fuse capacity	3A			

＊Always ground the unit

■ TOTAL SYSTEM CONFIGURATION LAYOUT

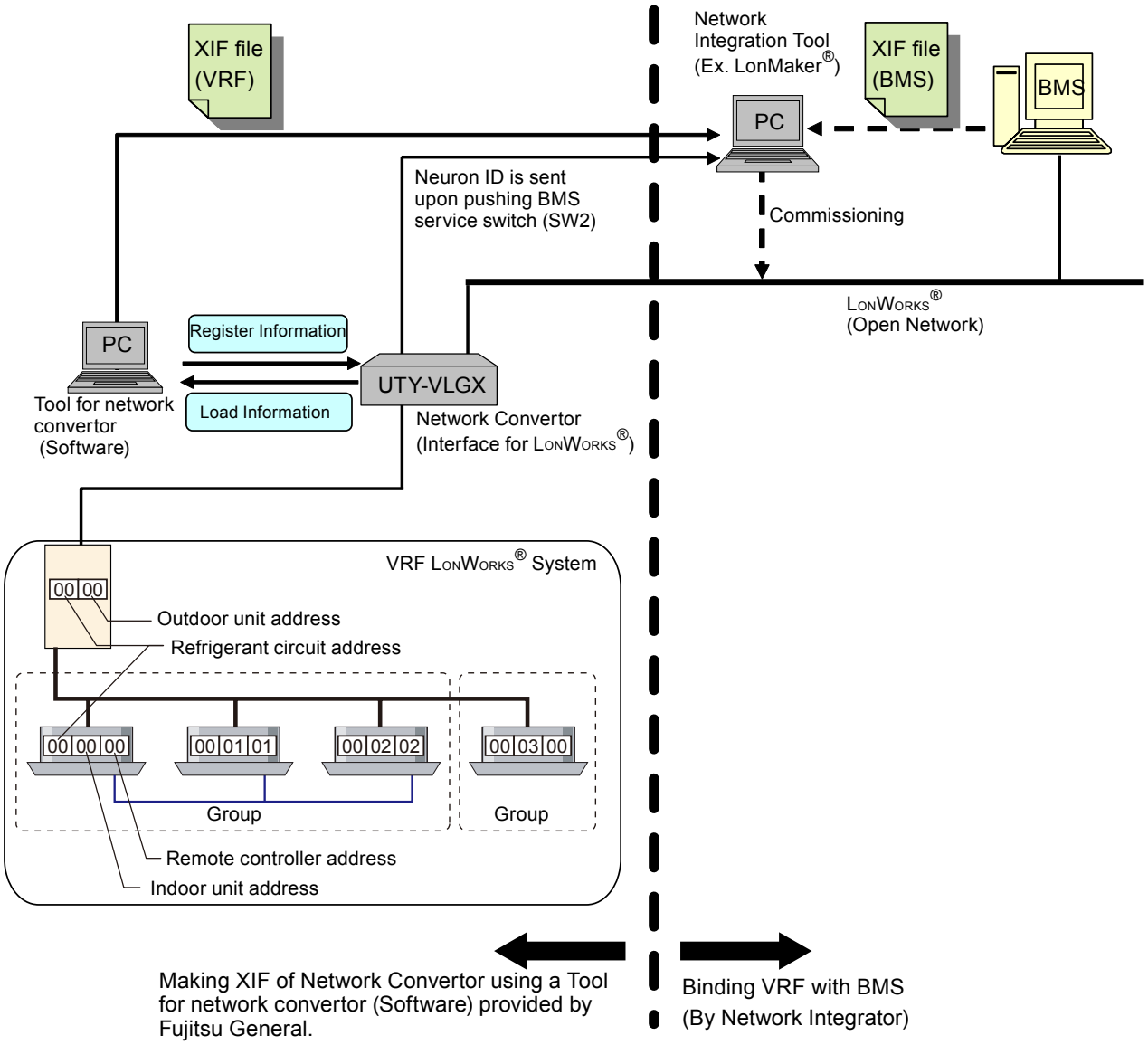

■ PCB FOR NETWORK CONVERTOR (UTY-VLGX)

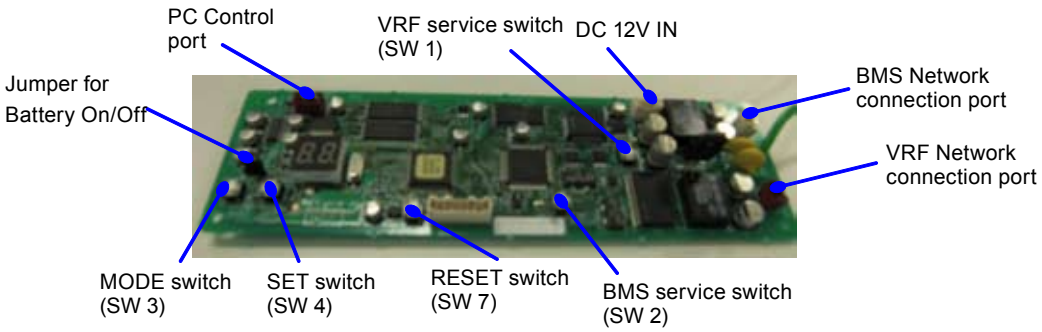

■ PROCEDURE IN BRIEF FOR MAKING XIF & REGISTER DATA TO NETWORK CONVERTOR (UTY-VLGX)

Note: For detailed information, please check the Application Manual which is included inside packaged CD-ROM.

Following are the work item during on line operation. However, making XIF is also possible during off line operation.

STEP 1: Connect the PC and Network Convertor (UTY-VLGX) .

Connection will be done by the connector cable provided as an accessory item of UTY-VLGX.

STEP 2: Install Tool for Network Convertor (software) for UTY-VLGX in PC.

Tool for Network Convertor is the accessory item of UTY-VLGX.

STEP 3: Set Network Convertor (UTY-VLGX) to Installation Mode.

STEP 4: Setting ID number of UTY-VLGX on PC screen of Tool for Network Convertor.
(ID number is required to identify UTY-VLGX from BMS. A maximum of four Network Convertors can be connected to one BMS, and ID number allocation is like 00, 01, and so on.)

STEP 5: Initial setting of Indoor Unit & Outdoor Unit Addresses by using the Tool for Network Convertor.

STEP 6: Register the initial setting data to UTY-VLGX. Click 'Register' dialog.

STEP 7: Set Configuration Properties.

It is the communication properties of UTY-VLGX. Select the following Communication items & Communication type if necessary. Otherwise, communication will be taken place by the Default values.

- Select Communication items
  - -Event Driven communication or Cyclic communication.
    (Default: Cyclic 3minutes)
  - -Communication Interval Time during turning ON all together.
    (Default: 3 minutes)
- Select Communication type (to communicate data with BMS)
  - -Communicate only when changing network variable or communicate all network variable. (Default: Only when changing network variable)
  - -Communicate only when changing room temperature value.
    (Default: Room temperature changed value 1°C)

STEP 8: Register the Configuration Properties data to UTY-VLGX. Click 'Register' dialog.

STEP 9: Making / Modifying XIF, and transfer XIF data by USB memory or floppy disk for binding.

STEP 10: Reset Network Convertor (UTY-VLGX) to press 'Reset SW7'.

STEP 11: Turn OFF the power. After that, remove the connection of PC & Network Convertor (UTR-VLGX) respectively.

In this stage, Network Convertor (UTY-VLGX) is ready for binding & commissioning.

CONTROL SYSTEM

Important: Network Convertor will not operate if,

- VRF network system address (Outdoor & Indoor units address) allocation information are not registered to Network Convertor.
- XIF data information and VRF network system address allocation information must not be same.
- Binding & Commissioning is not executed. (During binding, read out the Network Convertor Neuron ID by pushing BMS service switch (SW 2) on the main PCB of Network Convertor)
- If the ID number registered to the Network Convertor is not same as the ID number which is included in the XIF of Network Convertor.

CONTROL SYSTEM

3-3. BACnet® GATEWAY

■ MODEL : UTY - ABGX

■ FEATURES

- It is possible to connect medium to large sized BMS to VRF network system via BACnet®, a global standard for open networks.
- A maximum of 1600 indoor units with 4 VRF network systems (a maximum of 400 indoor units & 100 outdoor units for one network system) can be connected to one BACnet® Gateway.
- It is possible to control or monitor VRF network system from BMS via BACnet® Gateway.
- Compatible with BACnet® (ANSI / ASHRAE-135-2004) application specific controller (B-ASC).
- Compatible with BACnet®/IP over Ethernet.
- Scheduling function, Alarm & Event functions as well as Electricity Change Apportionment function are provided in BACnet® Gateway.
- Connection between VRF network system to personal computer is possible via small U10 USB interface. However, both U10 USB interface & personal computer are field supplied items.

■ SYSTEM DIAGRAM

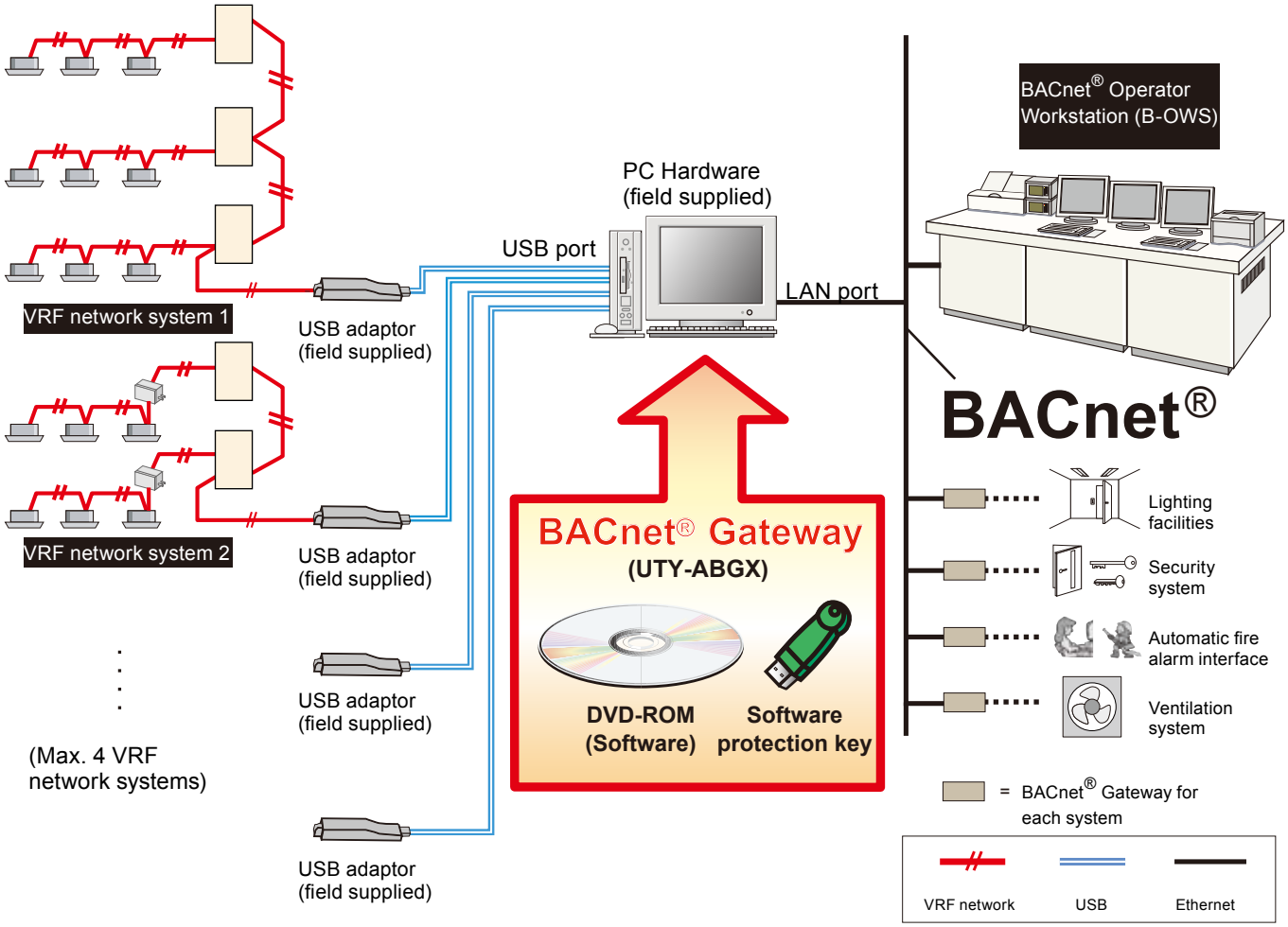

■ FUNCTIONS

● Indoor unit control (Output Object)

Commands from BMS are sent to the respective indoor units via BACnet® Gateway. (BMS → BACnet® Gateway → respective indoor units of VRF Network system)

● Indoor unit status monitoring (Input Object)

Indoor unit status is communicated to the BMS via BACnet® Gateway. (BMS ← BACnet® Gateway ← respective indoor units of VRF Network system)

■ BACnet® OBJECT LIST

● Type : Indoor

Object name	Code (II)	Function	Unit					
			Inactive	Active				
			Text-1	Text-2	Text-3	Text-4	Text-5	Text-6
AI	10	Set temp. status	Degree					
	11	Space temp.	Degree					
	12	Auto temp. (Low limit status)	Degree					
	13	Auto temp. (High limit status)	Degree					
	14	Cool/Dry temp. (Low limit status)	Degree					
	15	Cool/Dry temp. (High limit status)	Degree					
	16	Heat temp. (Low limit status)	Degree					
	17	Heat temp. (High limit status)	Degree					
AO	10	Temp. setting	Degree					
	11	Auto temp. (Low limit setting)	Degree					
	12	Auto temp. (High limit setting s)	Degree					
	13	Cool/Dry temp. (Low limit setting)	Degree					
	14	Cool/Dry temp. (High limit setting)	Degree					
	15	Heat temp. (Low limit setting)	Degree					
	16	Heat temp. (High limit setting)	Degree					
AV	10	ECA *1 operation data						
BI	10	Operation status	OFF	ON				
	14	Filter sign status	Unsigned	Signed				
	15	Indoor unit error status	Normal	Fault				
	16	Antifreeze operation status	Reset	Set				
	17	SAVE operation status	Normal	SAVE				
	18	Forced thermostat off status	Reset	Set				
	19	Emergency stop status	Normal	Stop				
	20	Mode mismatch status	Normal	Mismatch				
	21	Protect antifreeze status	Reset	Set				
	22	Temp. limit valid status	Invalid	Valid				
BO	10	Operation setting	OFF	ON				
	14	Filter sign resetting	Reset	Not reset				
	15	Antifreeze operation setting	Reset	Set				
	16	SAVE operation setting	Reset	Set				
	17	Forced thermostat OFF setting	Reset	Set				
	18	Emergency stop setting	Reset	Set				
	19	Temp. limit valid setting	Invalid	Valid				
MI	10	Operation mode status	Cool	Heat	Fan	Dry	Auto	
	11	Fan speed status	Low	High	Med	Auto		
	12	Indoor unit error code	Refer to FGL original error code					
	13	R.C. prohibition status	Refer to R.C. prohibition setting chart					
	14	Vertical air flow direction status	1	2	3	4	Swing	
	15	Horizontal air flow direction status	1	2	3	4	5	Swing
	16	Special driving status	Normal	Defrost	Oil Recovery			
	17	Managed mode	None	Master	Slave	External		
MO	10	Operation mode setting	Cool	Heat	Fan	Dry	Auto	
	11	Fan speed setting	Low	High	Med	Auto		
	12	R.C. prohibition setting	Refer to R.C. prohibition setting chart					
	13	Vertical air flow direction setting	1	2	3	4	Swing	
	14	Horizontal air flow direction setting	1	2	3	4	5	Swing
TL	10	ECA *1 operation data log						

*1) ECA: Electricity Charge Apportionment.

CONTROL SYSTEM

● Type : Outdoor

Object name	Code (II)	Function	Unit					
			Inactive	Active				
			Text-1	Text-2	Text-3	Text-4	Text-5	Text-6
BI	30	Outdoor unit error status	Normal	Fault				
	31	Forced OFF status	Reset	Set				
BO	30	Forced OFF setting	Reset	Set				
MI	30	Outdoor unit priority operation status *2	Cool	Heat	Neutral	None		
	31	Outdoor unit error code	Refer to FGL original error code					
MO	30	Outdoor low noise operation setting *3	Stop	Level-1 Quiet	Level-1 Ability	Level-2 Quiet	Level-2 Ability	

*2) Priority operation status is for Heat Pump type VRF
In other types of systems, this status is not necessary.

*3) Outdoor unit firmware may need to be updated for this function to work.
Contact your local sales company for detail.

● Type : Gateway

Object name	Code (II)	Function	Unit					
			Inactive	Active				
			Text-1	Text-2	Text-3	Text-4	Text-5	Text-6
Device	-	Device information						
BI	00	LON Network Adaptor error status	Normal	Abnormal				
	01	Gateway error status	Normal	Abnormal				
MI	00	LON Network Adaptor unit error code	Refer to FGL original error code					
	01	Gateway error code	Refer to FGL original error code					
	02	ECA *1 status	Invalid	Invalid (Stop)	Include Indoor Unit Only	Exclude Indoor And RB Unit	Include Indoor And RB Unit	Include RB Unit Only
MO	01	ECA *1 setting	Stop	Include Indoor Unit Only	Exclude Indoor And RB Unit	Include Indoor And RB Unit	Include RB Unit Only	
Notification	00-99	Notification class						
CAL	00	Calendar “Holiday-1”						
	01	Calendar “Holiday-2”						
	02-31	Calendar “Special day-1” - ”Special day-30”						
Schedule	00-99	Schedule timer						

*1) ECA: Electricity Charge Apportionment.

∗ To protect the compressor of the outdoor unit, please carefully read and understand the following cautions that may affect the operation of the compressor before executing the setting.

• When regularly making the following settings to the same outdoor unit by using schedule function etc., please leave the following interval.

<Corresponding function>

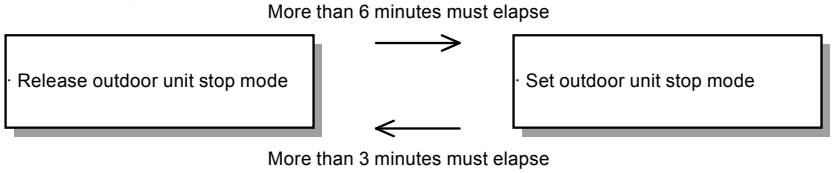

CONTROL SYSTEM

・When performing periodical settings like schedule settings for the following functions, perform the setting to all the indoor units in the same refrigerant system simultaneously, conforming to the timing restriction described below.

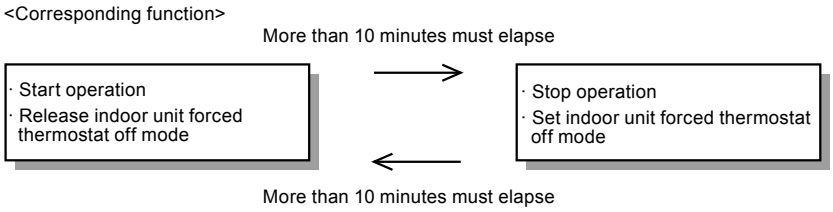

* Forced thermostat OFF instruction and outdoor unit stop instruction
  - ・Only one equipment can send these instructions for each refrigerant system.
  - ・When these instructions are sent by multiple equipments, the system may not respond as instructed or may malfunction.
* The electricity charge apportionment function of VRF system can only be performed from one equipment simultaneously.

■ PACKING LIST

Name and shape	Quantity	Application
DVD-ROM 	1	Includes the software and manuals for BACnet® Gateway.
Wibu key  (Software protection key)	1	Software protection key to be inserted in a USB slot running BACnet® Gateway. BACnet® Gateway may only run on a PC with Wibu Key.

CONTROL SYSTEM

■ PERSONAL COMPUTER SPECIFICATIONS

Operating system	•Microsoft® Windows® XP SP3 (32-bit) Professional •Microsoft® Windows® Vista® SP2 (32-bit) Home Premium, Business •Microsoft® Windows® 7 SP1 (32/64-bit) Home Premium, Professional •Microsoft® Windows® 8 (32/64-bit) Pro [Supported languages] English, Chinese, French, German, Russian, Spanish, and Polish
CPU	Intel® Core™ i3 2GHz or higher
Memory	2GB or more (Windows® XP, Vista®, 7 32-bit) 4GB or more (Windows® 7 64-bit, Windows® 8)
HDD	40GB or more of free space
Display	1024 x 768 or higher resolution
Interface	USB port (x2-5) is required Ethernet port is required
Software required	Adobe® Reader® 9.0 or later
Hardware required	DVD-ROM Drive

■ USB ADAPTOR SPECIFICATIONS

Product Name : Echelon® U10 USB Network Interface – TP / FT-10 Channel

Model Number: 75010R

■ INSTALLATION PROCEDURE

Before doing installation, connect between the VRF Network System and USB Adaptor.

Installation steps in brief are as follows:
(For detail, please check the Installation and Operation Manual)

Step1: Install the driver for USB Adaptor to PC
*in this stage, do not connect the USB Adaptor to PC

Step2: Install the BACnet® Gateway (Application Software) to PC

Step3: Restart PC.

Step4: After PC restart, make sure that the USB Adaptor, WIBU-KEY and Ethernet cable for the BACnet® Gateway are connected to PC

Step5: Startup the application.

Step6: Input all necessary initial setting items like, IP Address, and others. After that, click the OK button. USB Adaptor setting screen pops up automatically, select the connected adaptor and click OK button. After that, unit register screen appears automatically, scanning all connected units and click OK button. Complete the startup operation if Gateway execution screen appears on PC screen.

Step7: Arrange the information between BMS and BACnet® Gateway using the Read Property Service and so on.

CONTROL SYSTEM

3-4. SIGNAL AMPLIFIER

■ MODEL : UTY - VSGXZ1

If the total length of transmission line exceeds 500m, or the number of units exceeds 64 units, Signal Amplifier will be necessary to use.

- Transmission line length can be extended up to 3600m with multiple signal amplifier.
- Up to 8 Signal Amplifier(Filter mode is OFF) can be installed in 1 VRF network system.
- Up to 32 Signal Amplifier(Filter mode is ON) can be installed in 1 VRF network system.
- When indoor unit is installed 321 or more, please install one Signal amplifier (Filter mode is ON) for every 64 units. (However, only when VR-II Series is installed.)

■ FEATURES

To prevent the drop of signal level by taking distance of length or quantity of unit in VRF network with installing signal amplifier, signal level can be recovered.



■ ELECTRICAL WIRING

● Case of V-II or J-II

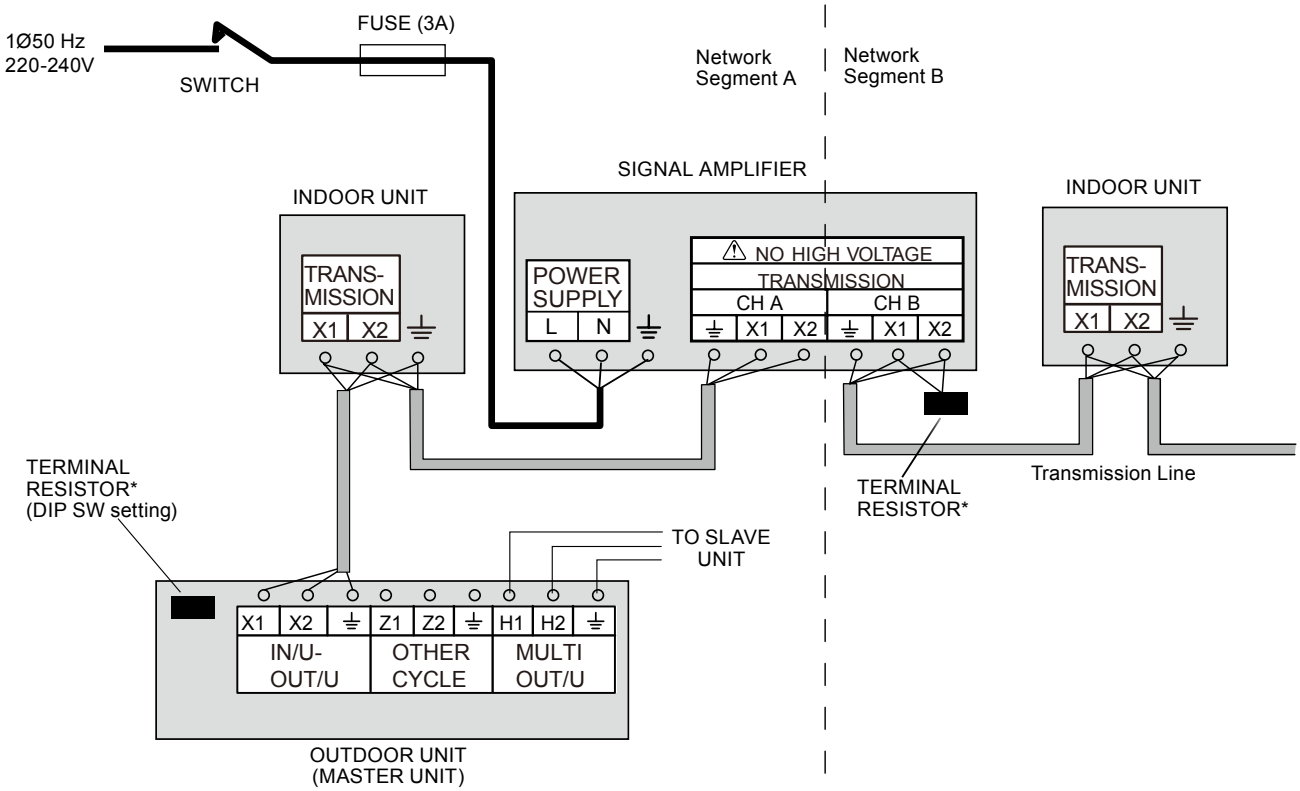

CONTROL SYSTEM

● Case of VR-II

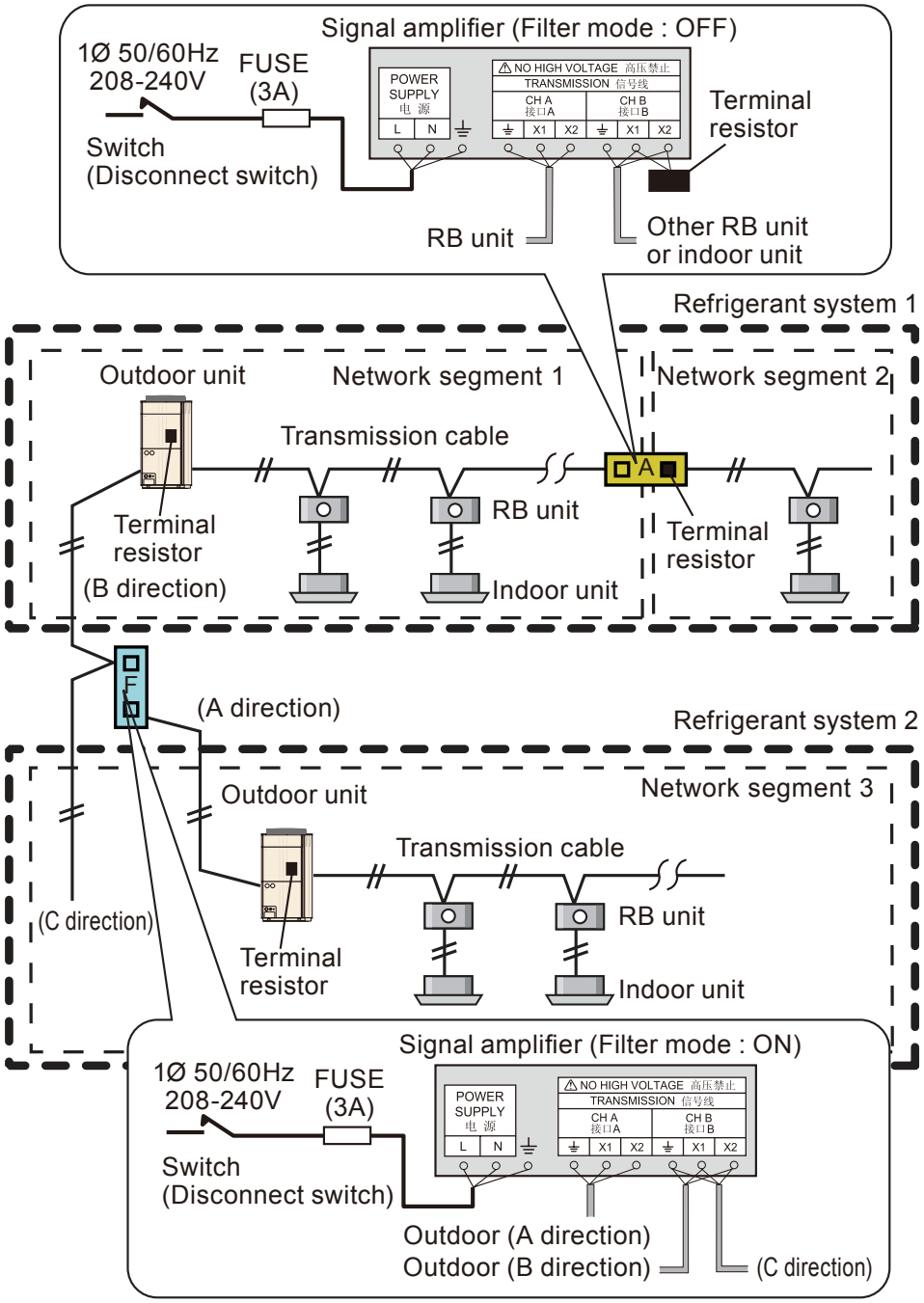

* Make sure to install 1 piece of terminal resistor to each network segment.
Terminal resister is provided for each outdoor unit, but please confirm that there is only one terminal resistor in the same network segment.

CONTROL SYSTEM

● Filter mode setting

Set the Filter mode to suppress an increase of the amount of communication information in the VR-II system.

- Filter mode is turned on by inserting the accessory connecting wire at the CN4 connector on the PC board.
- When the Filter mode setting is changed, turn the power off once. Otherwise, the setting will not be recognized.

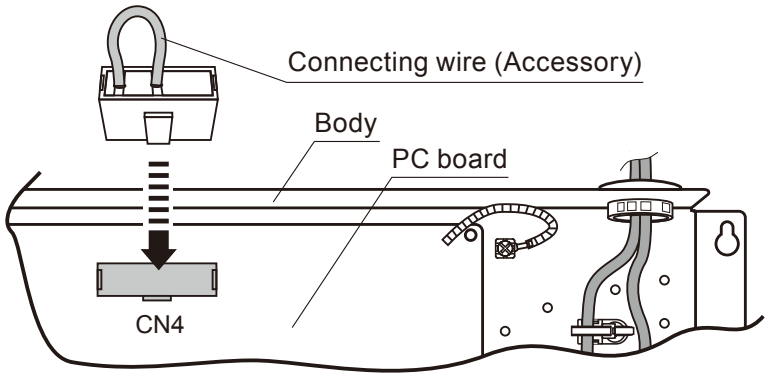

■ DIMENSIONS

(Unit : mm)

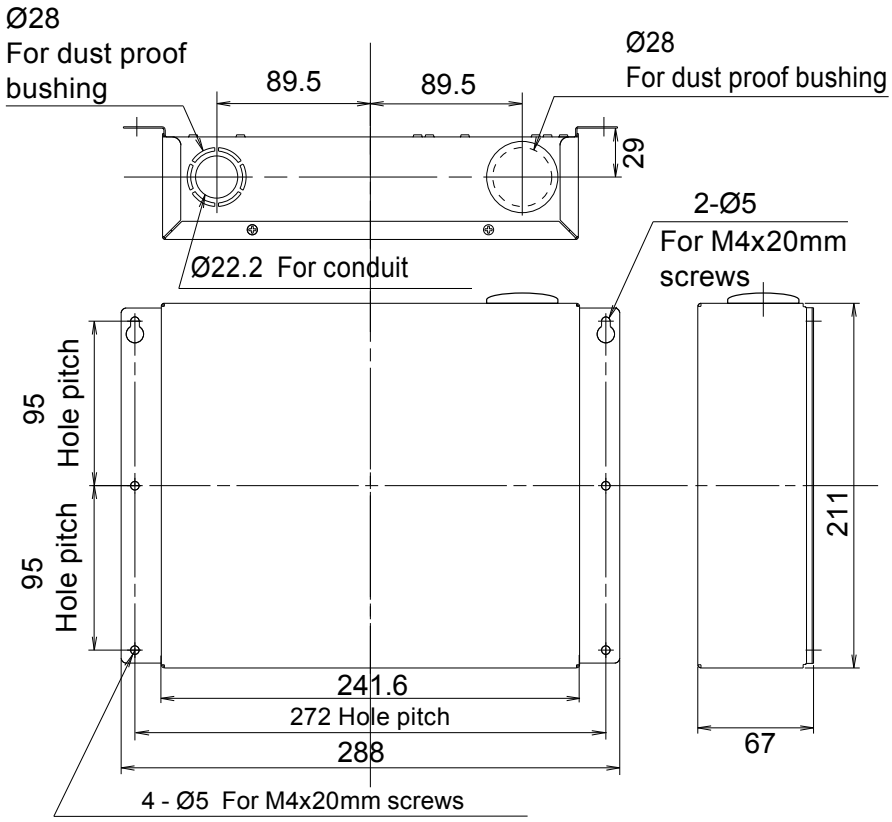

CONTROL SYSTEM

■ PACKING LIST

The following installation parts are supplied. Use them as required.

Name and shape	Quantity	Application
Installation manual 	1	
Cable tie 	3	For mounting the power supply cable, and transmission cable.
Screw (M4 x 20mm) 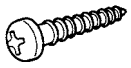	4	For mounting the signal amplifier.
Terminal resistor 	1	It is used when there is no terminal resistor in a network segment.
Dust proof bushing 	1	For connecting the power supply cable.
Connecting wire 	1	For setting the filter mode

CONTROL SYSTEM

■ WIRING SPECIFICATIONS

Use	Size		Wire type	Remarks
Power supply cable	Maximum	1.25mm^2	Type 60245 IEC 57 or equivalent	1 ø AC208 - 240 V 50/60Hz, 2 Wire + ground (Always ground the unit)
	Minimum	0.5mm^2		
Transmission cable	0.33mm^2 (22AWG)		LEVEL4 (NEMA) non-polar 2 core, twisted pair solid core Shielded	LonWorks® compatible cable
Fuse capacity	3A			

■ SPECIFICATIONS

● Main specification

Power supply		1ø AC208 - 240V 50/60Hz
Input Power (W)		4.5
Temperature(°C)	Operating	0 to 46
	Packaged	-10 to 60
Humidity (%)	Packaged	0 to 95 (RH) ; No condensation
Dimensions (H x W x D) (mm)		67 x 288 x 211
Weight (g)		1500

3-5. EXTERNAL SWITCH CONTROLLER

■ MODEL : UTY-TEKX

■ FEATURES



- Air conditioner switching can be controlled by connecting other sensor switches.
- ON/OFF, Temperature, Fan speed and Operating mode can be switched in combination with Card-key switches equipped in facilities such as hotel rooms.
- Card-key or other sensor switches are available as field supplied parts.

■ SYSTEM DIAGRAM

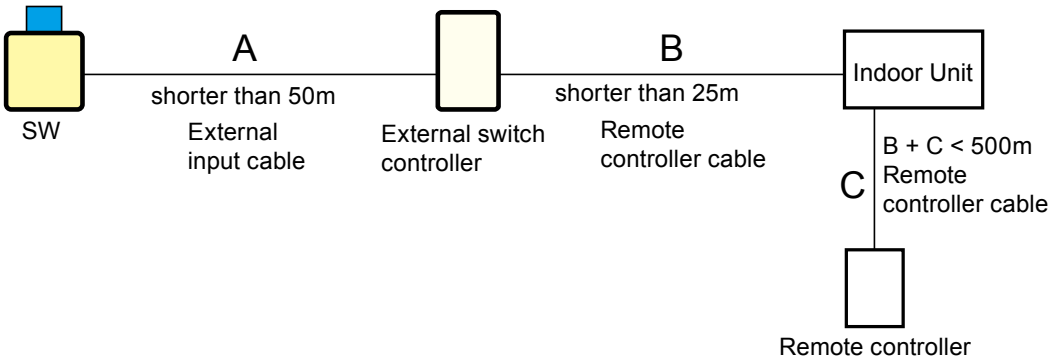

■ ELECTRICAL WIRING

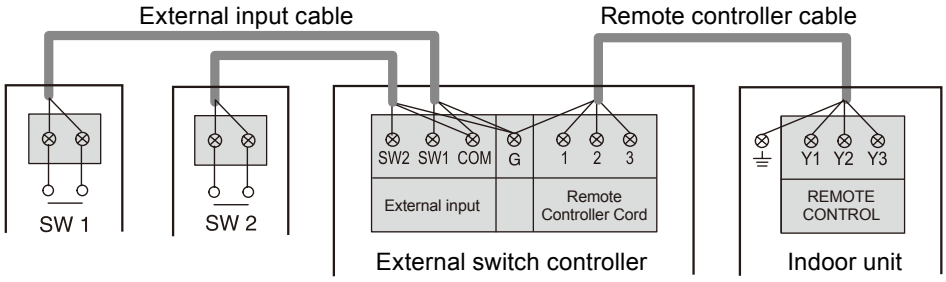

*Connect SW2 only when it is used.

Connection to external contacts

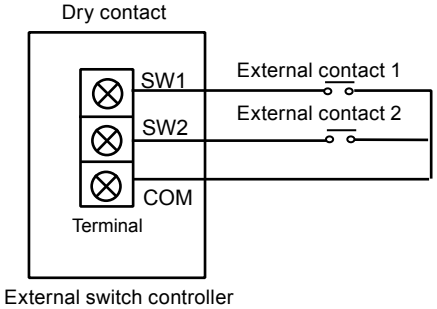

Open circuit voltage : 12 (V) ± 2 (V).
Short circuit current : ≦2 (mA).
Short circuit detection resistance (R_{ON}) : ≦1 (kilo-ohm).
Open circuit detection resistance (R_{OFF}) : ≧50 (kilo-ohm).

CONTROL SYSTEM

■ DIMENSIONS

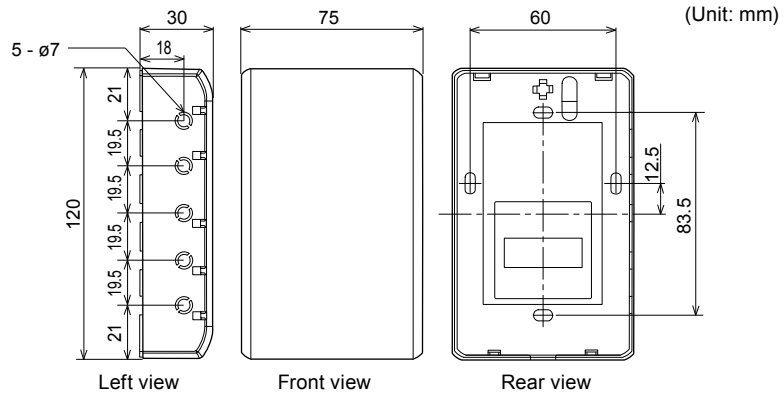

■ INSTALLATION

● Connection Pattern

Note: Connection pattern is different according to type of Indoor unit.

Indoor unit types	Connection Pattern
All Cassette type	Pattern A
All Duct type	
All Ceiling type	
Wall Mounted type	Pattern B

● Pattern A

Connect the end of remote controller cable directly to the exclusive terminal block.

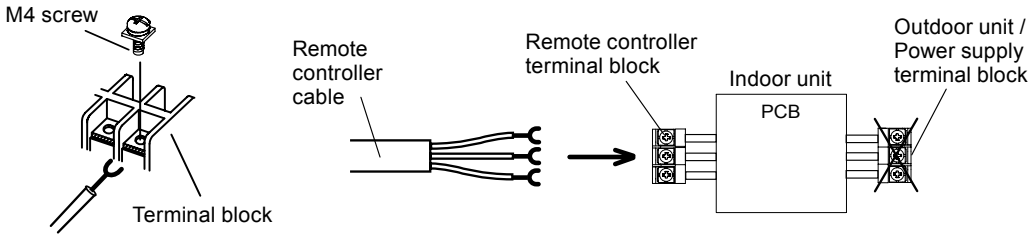

Note: The equipment may fail if it is connected to the outdoor unit or the power supply terminal block.

● Pattern B

1) Modify the remote controller cable as per below methods.

- Use a tool to cut off the terminal on the end of the remote controller cable and then remove the insulation from the cut end of the cable as shown in Fig.
- Connect the remote controller cable and connecting cable as shown in Fig.
- Be sure to insulate the connection between the cables.

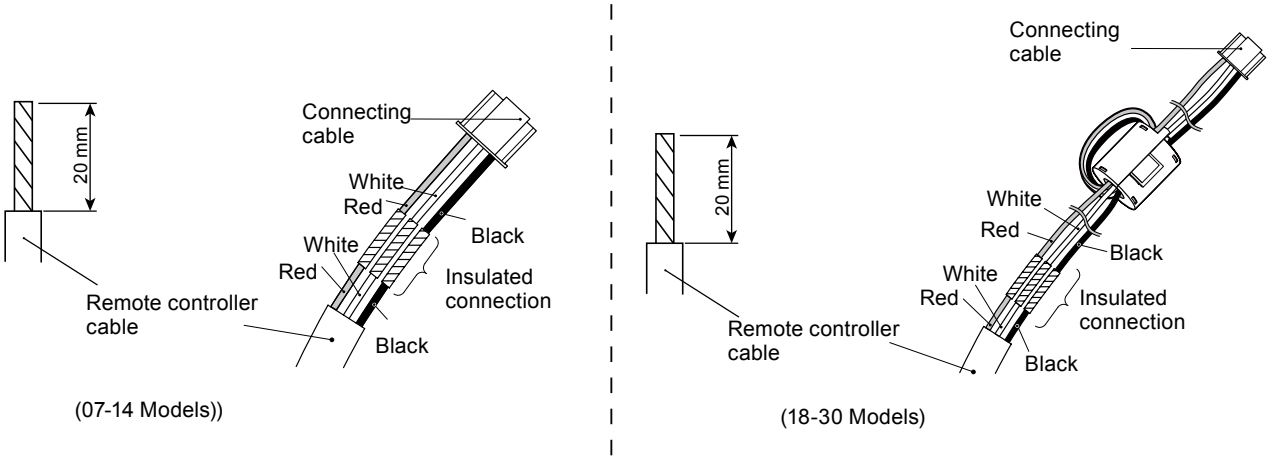

2) Method of connecting remote controller cable

● Connecting cable made by above-mentioned 1) is connected with PCB of Indoor unit.

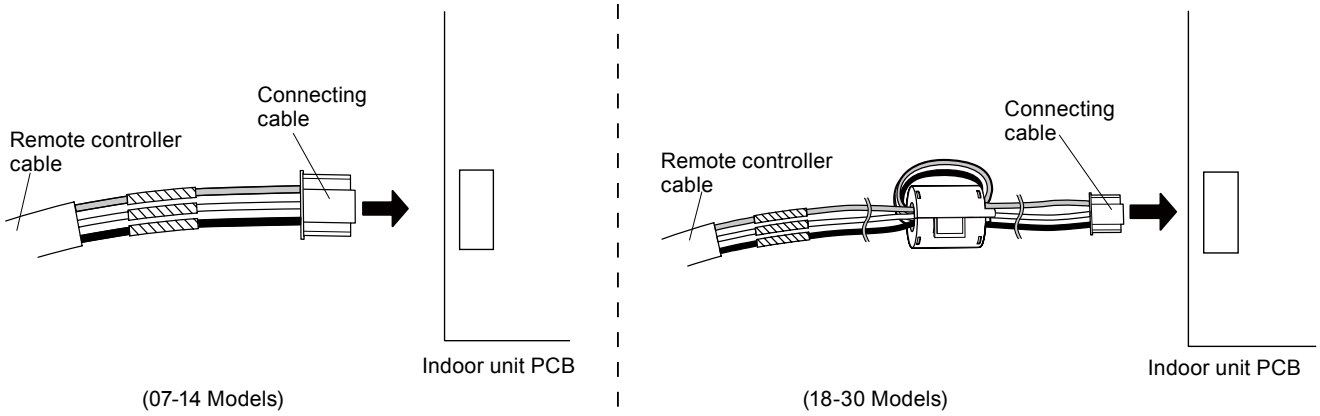

■ PACKING LIST

Name and shape	Quantity	Application
Installation manual	1	
Screw (M4x16mm)	2	For installing the external switch controller
Cable tie	5	For external switch controller and cable binding

■ WIRING SPECIFICATIONS

Use	Size	Wire type	Remarks
Remote controller cable	0.33mm^2 (22AWG)	Polar 3core	Use sheathed PVC cable or shielded cable in accordance with the regional cable standard.
External input / output cable	0.33mm^2 (22AWG)	Polar 2core, Twisted pair	Use shielded cable in accordance with the regional cable standard.

■ SPECIFICATIONS

Power supply	DC 12V
Dimensions (H x W x D) (mm)	120 x 75 x 30
Weight (g)	100

■ EXAMPLE

Application	Setting	Wiring	Operation example
When controlling the individual operation states with two external contact	MODE0 P1: Arbitrary operation state Contact OFF→ON P2: Arbitrary operation state Contact OFF→ON Others setting are arbitrary.	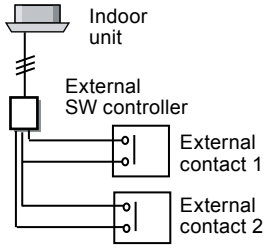	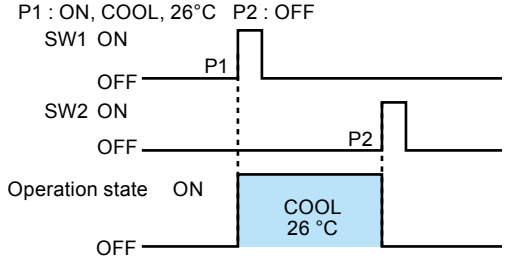

CONTROL SYSTEM

■ EXAMPLE

Application	Setting	Wiring	Operation example
When controlling operation by ON or OFF of an external contact switch	MODE1 P1 : Arbitrary operation state P2 : Arbitrary operation state Others setting are arbitrary.	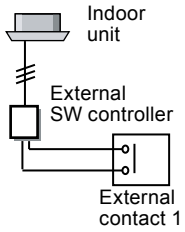	P1 : OFF P2 : ON, COOL, 26°C 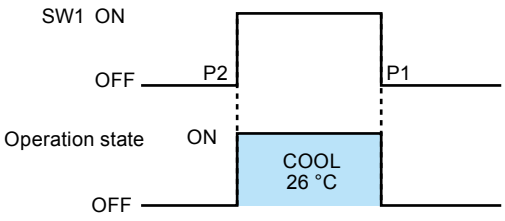
When operating in the state set when an external contact switch was set to ON and returning to the original operation state when the switch was set to OFF	MODE1 or 0 P1 : SETBACK P2 : Arbitrary operation state Others setting are arbitrary.	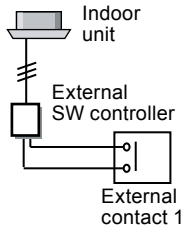	MODE1, P1 : SETBACK P2 : ON, COOL, 26°C 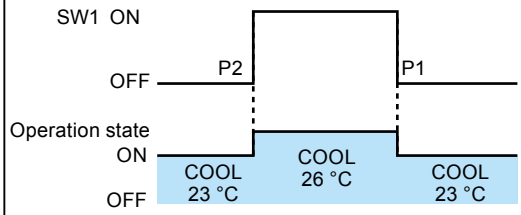
When operated in the state when an external contact switch was set to OFF and returned to original operation state	MODE1 or 0 P1 : Arbitrary operation state P2 : SETBACK Others setting are arbitrary.	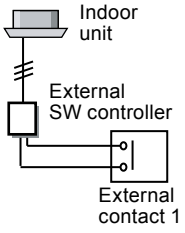	MODE1, P1 : ON, COOL, 26°C P2 : When SETBACK 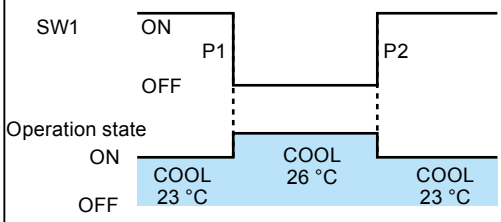
When a temperature sensor switch is connected and cooling and heating switching is performed.	MODE2 P1 : ON, COOL or HEAT P2 : ON, COOL or HEAT Operation conditions: Unit operationg only Others setting are arbitrary.	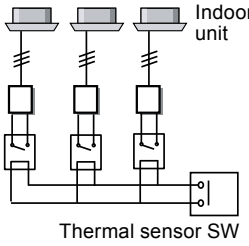 An external switch controller is connected to all the indoor units of the same refrigerant system and cooling and heating are switched by one temperature sensor.	P1 : ON, COOL, 26°C P2 : ON,HEAT, 21°C 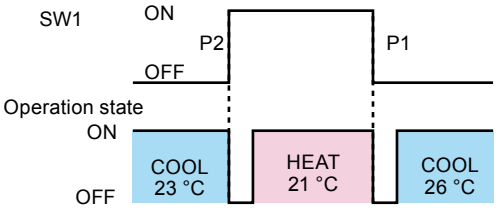
When preventing chattering noise within 1 minute of the external contact switch.	MODE1 Delay-time setting: Delay P1 : Arbitrary operation state P2 : Arbitrary operation state Others setting are arbitrary.	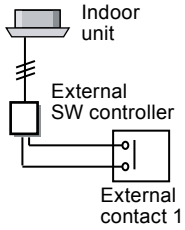	P1 : OFF P2 : ON, COOL, 26 °C 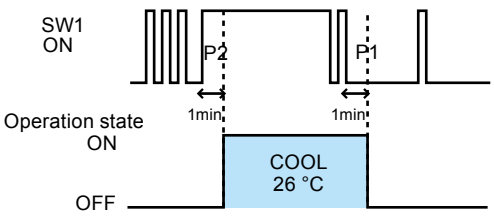

CONTROL SYSTEM

4. SERVICE & WEB MONITORING TOOL

4-1. SERVICE TOOL (Software)

■ MODEL : UTY - ASGX

Extensive monitoring and analysis functions for installation and maintenance.

Operation status and error history can be grasped promptly and adequately.

■ FEATURES

- Operation status can be checked and analyzed to detect even the smallest abnormalities.
- Data collected and stored on site can be checked later, off-line, off-site for more detailed analysis.
- One VRF network system with maximum number of up to 400 units can be monitored and controlled.
- Operation status and various sensor information can be monitored and checked real time in the form of list, refrigerant circuit diagram, and graphs as well.
- Simple operation control functions are useful during maintenance.
- The recent error history can be retrieved from units on demand to perform analysis on the cause of the error, after connecting Service Tool to the VRF network system.
- Commissioning tool supports test runs, data storage for each unit and saving of data as CSV files, which may be formatted to create commissioning report.
- Connectable to any point of transmission line with USB adaptor *1 (field supplied)
- Connection between VRF network system to personal computer is possible via small U10 USB interface. However, both U10 USB interface & personal computer are field supplied items.
- The operating state (Solenoid valve) of RB unit can be checked.

*1 : Service Tool (UTY-ASGX) will only support USB type network adaptor and will not support transmission adaptor of the traditional type(UTR-YTMA)

CONTROL SYSTEM

■ FUNCTIONS

1) System List

Displays the overall operation status of all or specified units in the system in a list form.



2) Equipment Detail (Diagram)

Displays the detail information for sensor values, electrical components etc. for the specified units in schematic. The information here can be used along with the detailed information in list form, to check the operation status of units and make detail analysis on the cause, in case an error occurs.

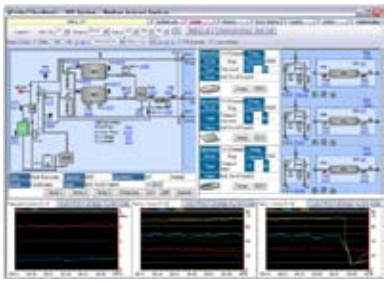

3) Equipment Detail (List)

Displays the detail information for sensor values, electrical components etc. of units in a specified refrigerant system in list form. The information here can be used along with the detailed information in diagram form, to check the operation status of units and make detail analysis on the cause, in case an error occurs.



4) Operation History

The indoor units or outdoor unit operation history can be recorded.

The displayed operation history can be printed out and saved to a CSV file.

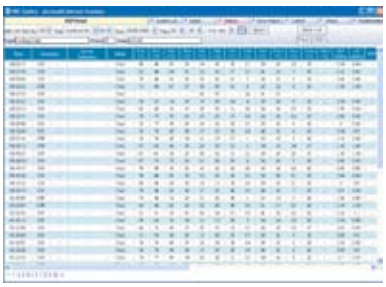

5) Error History

Displays the error information for each unit. The error information can sequentially be displayed up to 50 items as they occur starting with the latest error.

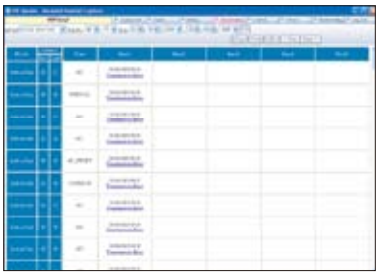

6) Remote File Download

Operation and error history data can be downloaded. Only the required data may be downloaded specifying the refrigerant system, unit and time range.

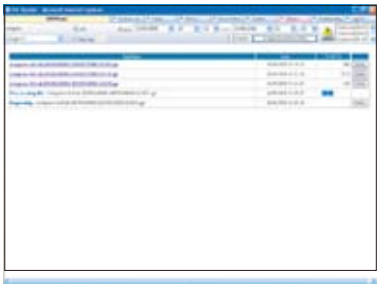

CONTROL SYSTEM

7) Commissioning Tool

Test run commands can be executed with this tool.

During test running, the outdoor unit / indoor unit sensor data can be saved (commissioning log data).

After the end of test running, this data can be exported in CSV file format.

8) Network Topology Analyzer *

A list of units connected to the VRF system network is displayed in network segments in tree form.



9) Remote Setting *

Function (Field) Setting for indoor unit is realized remotely.



10) System Time Setting *

An arbitrary time is set for all the remote controllers within the system.

*: Supported by Ver. 1.1 or later

11) Central Release *

The operation setting restriction function of the indoor units set from the controller can be forcibly released.(remote controller inhibit, temperature upper/lower limit setting)

12) Model Name Writer *

An arbitrary model name can be written to the target unit.

13) Error Memory Reader *

When an error occurs at an outdoor unit, the operation data records before the error are acquired over a network and saved to a CSV file.

Note: To perform "Error Memory Reading", Service Tool and the corresponding outdoor unit must be connected directly with each other. Refer to the Operation Manual of the Service Tool for detail.

14) Time Guard Information *

Reference data for judging the maintenance period of indoor and outdoor units (compressor,FAN, etc. integrated time) is output to a CSV file.

*: Supported by Ver. 1.1 or later

CONTROL SYSTEM

■ SYSTEM DIAGRAM

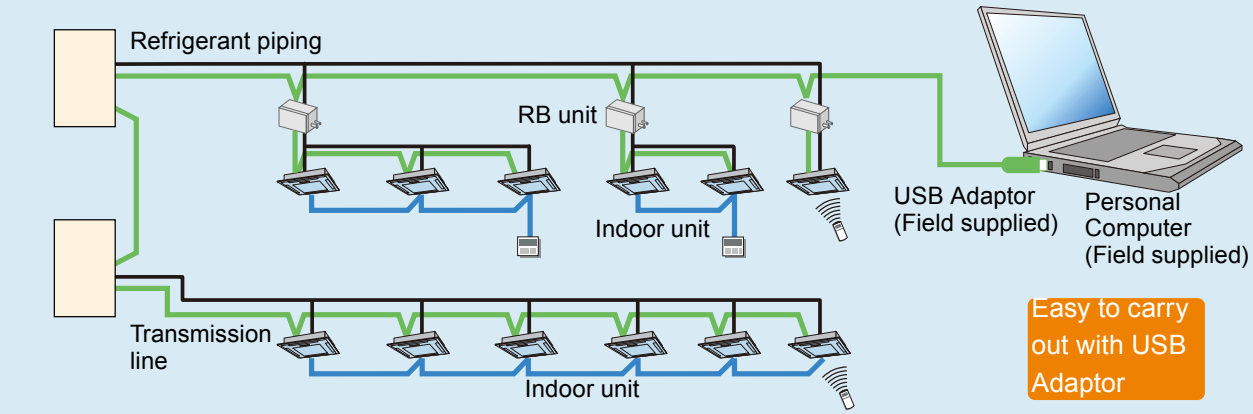

* USB Adaptor is U10 USB Network interface of Echelon® corporation.

■ PACKING LIST

Name and shape	Quantity	Application
DVD-ROM 	1	Includes the software and manuals for Service Tool.
Wibu key  (Software protection key)	1	Software protection key to be inserted in a USB slot running Service Tool. Service Tool may only run on a PC with Wibu Key.

■ PERSONAL COMPUTER SPECIFICATIONS

Operating system	•Microsoft® Windows® XP SP3 (32-bit) Professional •Microsoft® Windows® Vista® SP2 (32-bit) Home Premium, Business •Microsoft® Windows® 7 SP1 (32/64-bit) Professional •Microsoft® Windows® 8 (32/64-bit) Pro [Supported language] English only
CPU	1GHz or higher
Memory	512 MB or more (Windows® XP 32-bit) 1GB or more (Windows® Vista®, 7, 8 32-bit) 2GB or more (Windows® 7, 8 64-bit)
HDD	10GB or more of free space
Display	1024 x 768 or higher resolution
Interface	USB port for U10 USB Network Interface and Software protection key
Software required	Internet Explorer 8.0 or 9.0 or 10.0 / Adobe® Reader® 9.0 or later
Hardware required	DVD-ROM Drive

■ USB ADAPTOR SPECIFICATIONS

Product Name : Echelon® U10 USB Network Interface – TP / FT-10 Channel

Model Number: 75010R

CONTROL SYSTEM

4-2. WEB MONITORING TOOL (Software)

■ MODEL : UTY-AMGX

■ FEATURES

- Troubleshooting is performed by monitoring each unit remotely during periodical system checks off-site.
- Operation status can be checked and analyzed to detect even the smallest abnormalities.
- Four VRF network systems each with 400 units, with maximum number of up to 1,600 units can be monitored and controlled.
- Operation status and various sensor information can be monitored and checked real time in the form of list, refrigerant circuit diagram, and graphs as well.
- The monitoring data in a remote side can be optionally downloaded. And, this data can be displayed in off-line mode of the Service Tool.
- Error notification can be automatically transmitted to several locations using the internet *1.
- Monitoring side computer is not required to install special software, requires only general web browser.
- Connectable to any point of transmission line with U10 USB interface *2 (field supplied)
- Connection between VRF network system to personal computer is possible via small U10 USB interface. However, both U10 USB interface & personal computer are field supplied items.
- The operating state (Solenoid valve) of RB unit can be checked.

*1 : Use of internet mail system required.

*2 : Web Monitoring Tool (UTY-AMGX) will only support USB type network adaptor and will not support transmission adaptor of the traditional type (UTR-YTMA).

CONTROL SYSTEM

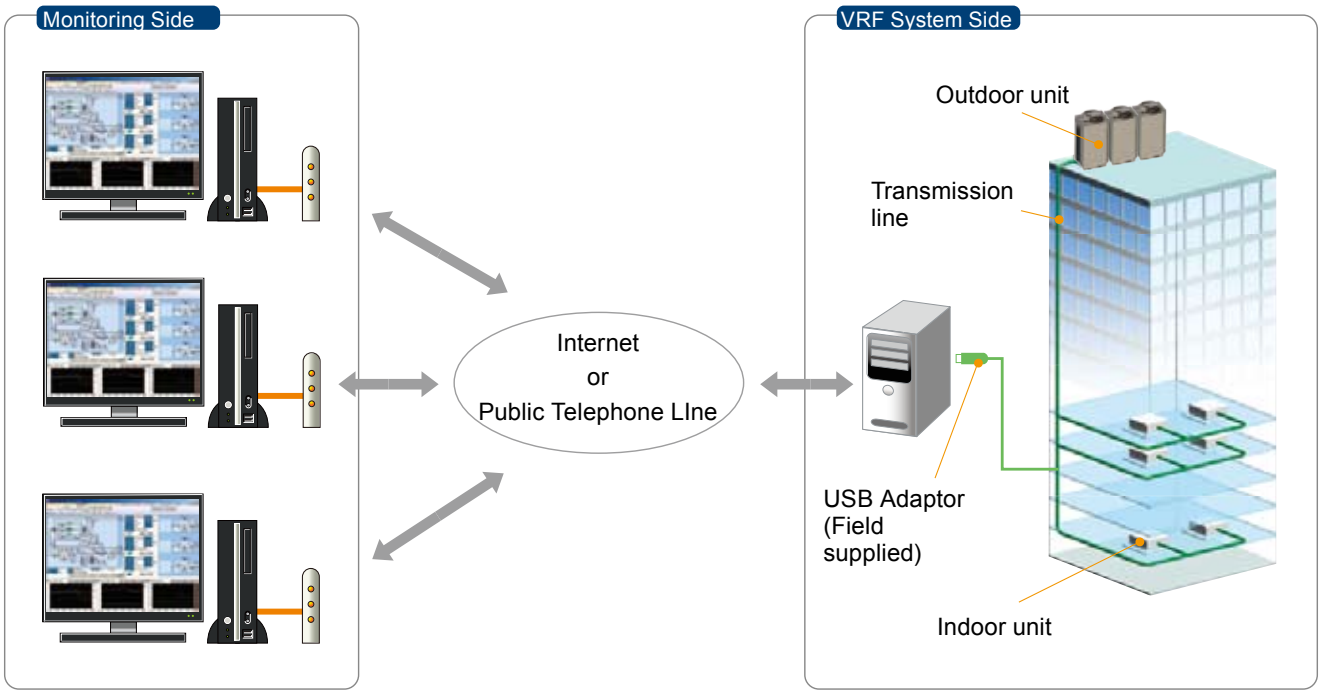

■ SYSTEM DIAGRAM

● System components

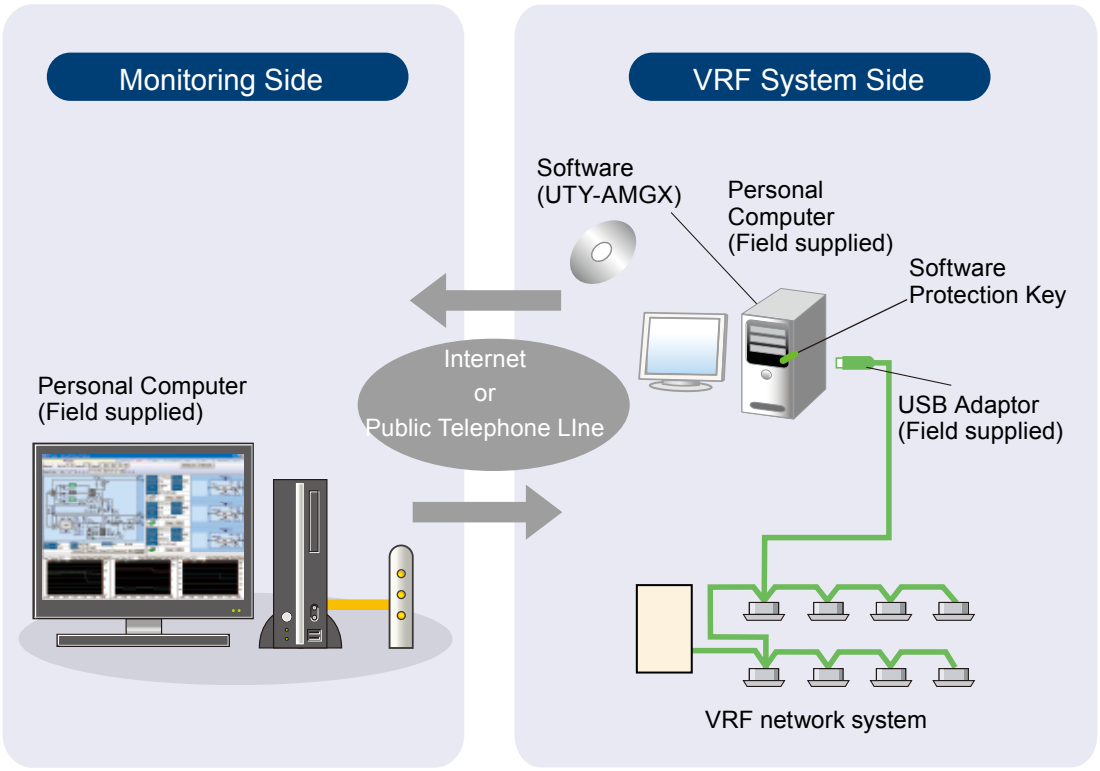

● Support 4 VRF network system

PC USB adaptor (max. 4 adaptors per PC) permit control and monitoring of up to 1,600 units.

Suitable for large-scale buildings or hotels

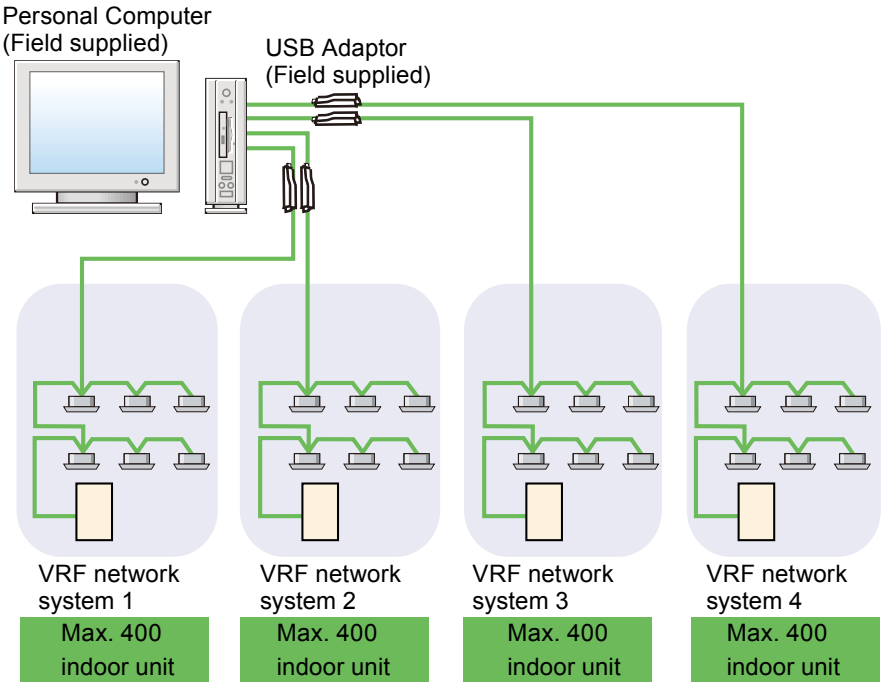

CONTROL SYSTEM

■ PACKING LIST

Name and shape	Quantity	Application
DVD-ROM 	1	Includes the software and manuals for Web Monitoring Tool.
Wibu key  (Software protection key)	1	Software protection key to be inserted in a USB slot running Web Monitoring Tool. Web Monitoring Tool may only run on a PC with Wibu Key.

■ PERSONAL COMPUTER SPECIFICATIONS

Operating system	•Microsoft® Windows® XP SP3 (32-bit) Professional •Microsoft® Windows® Vista® SP2 (32-bit) Home Premium, Business •Microsoft® Windows® 7 SP1 (32/64-bit) Professional •Microsoft® Windows® 8 (32/64-bit) Pro [Supported language] English only
CPU	1GHz or higher
Memory	1GB or more (Windows® XP, Vista®, 7, 8 32-bit) 2GB or more (Windows® 7, 8 64-bit)
HDD	40GB or more of free space
Display	1024 x 768 or higher resolution
Interface	USB port (for U10 USB Network Interface Max.4 , Software protection key) Either of the following interface is required for remote connection: •Public Telephone LIne : Modem is required •Internet using LAN : Ethernet port is required
Software required	Internet Explorer 8.0 or 9.0 or 10.0 / Adobe® Reader® 9.0 or later
Hardware required	DVD-ROM Drive

■ USB ADAPTOR SPECIFICATIONS

Product Name : Echelon® U10 USB Network Interface – TP / FT-10 Channel

Model Number: 75010R

CONTROL SYSTEM

■ COMPARISON TABLE

No.	Item	Service Tool UTY-ASGX	Web Monitoring Tool UTY-AMGX	
			VRF network system Side	Monitoring Side
1	Interchangeability of equipment	●	●	●
2	Indication of equipment list	●	●	●
3	Operation control	●	●	—
4	Indication of refrigerant circuit diagram	●	●	●
5	Commissioning tool	●	●	—
6	Monitoring of equipment information	●	●	●
7	Monitoring of operating condition	●	●	●
8	Monitoring of sensor data	●	●	●
9	Storage and CSV output of operating history (sensor data)	●	●	●
10	Indication of trend graph	●	●	●
11	Printing of trend graph	●	●	●
12	Monitoring and screen display of abnormalities	●	●	●
13	E-mail automatic transmission of abnormalities	—	●*1	—
14	Setting for user level	—	●	—
15	Network Topology Analyzer *	●	●	—
16	Remote Setting *	●	●	—
17	System Time Setting *	●	●	—
18	Central Release *	●	●	—
19	Model Name Writer *	●	—	—
20	Error Memory Reader *	●	—	—
21	Time Guard Information *	●	●	●

*: Supported by Ver. 1.1 or later

*1: Available only durring connection to the Internet.

CONTROL SYSTEM

Refrigerant R410A INVERTER

AIRSTAGE™
Variable Refrigerant Flow System

6. SYSTEM DESIGN

DTV_J2E015E_05--CHAPTER06
2013.04.01

CONTENTS

6. SYSTEM DESIGN

1. SYSTEM DESIGN ..... 06 - 01
1-1. REFRIGERANT SYSTEM ..... 06 - 01
1-1-1. EXAMPLE OF REFRIGERANT SYSTEM ..... 06 - 02
1-2. VRF NETWORK SYSTEM ..... 06 - 05
1-3. MOUNTING POSITION ..... 06 - 10

2. PIPING DESIGN ..... 06 - 12
2-1. IMPORTANT ITEMS WHEN USING REFRIGERANT R410A ..... 06 - 12
2-2. PIPING LIMITATION ..... 06 - 14
2-3. PIPE SIZE ..... 06 - 16
2-4. SELECTION OF PIPE HEAT INSULATING MATERIAL ..... 06 - 20
2-5. ADDITIONAL CHARGE CALCULATION ..... 06 - 21
2-6. EXAMPLE OF PIPING DESIGN ..... 06 - 22

3. PIPING CONNECTION ..... 06 - 28
3-1. CAUTION OF PIPING ..... 06 - 28
3-2. PIPING TO OUTDOOR UNIT ..... 06 - 30
3-3. SEPARATION TUBE ..... 06 - 33
3-4. HEADER ..... 06 - 36
3-5. EV KIT ..... 06 - 39

4. WIRING DESIGN ..... 06 - 43
4-1. ELECTRICAL WIRING ..... 06 - 43
4-2. POWER SUPPLY CABLE WIRING ..... 06 - 45
4-3. TRANSMISSION LINE ..... 06 - 48
4-4. CONTROLLER CABLE WIRING ..... 06 - 57

CONTENTS

6. SYSTEM DESIGN

5. DRAIN CONNECTION ..... 06 - 59

5-1. OUTDOOR UNIT ..... 06 - 59

5-2. INDOOR UNIT ..... 06 - 60

6. STANDARD ACCESSORIES ..... 06 - 71

6-1. OUTDOOR UNIT ..... 06 - 71

6-2. INDOOR UNIT ..... 06 - 72

1. SYSTEM DESIGN

1-1. REFRIGERANT SYSTEM

■ CONNECTABLE UNIT WITHIN 1 REFRIGERANT SYSTEM

Unit	Quantity	Remarks
Outdoor unit	1 unit	
Indoor unit	2 to Max. 7 units	4HP (AJ∗A40LALH)
	2 to Max. 8 units	5HP (AJ∗A45LALH)
	2 to Max. 9 units	6HP (AJ∗A54LALH)

● Table

HP	Capacity (kW)	Outdoor unit quantity	Maximum connectable indoor unit	Connectable cooling capacity range *1
4	12.1	1	7	46% to 130%
5	14.0	1	8	50% to 130%
6	15.5	1	9	

*1: Calculate the cooling capacity of indoor unit with model code 04 (Ex. AUXB04) as "2.2 kW".

● Caution

- When all indoor units are operating at maximum capacity, individual indoor unit operate at a slightly lower capacity. (When connecting more than 100%)
- Do not exceed both of "connectable capacity range" and "maximum connectable indoor unit", otherwise it may cause hinder the return of the refrigerant oil and cause a compressor breakdown.
- Minimum connectable indoor unit number is 2.

SYSTEM DESIGN

1-1-1. EXAMPLE OF REFRIGERANT SYSTEM

● Example 1 (OK)

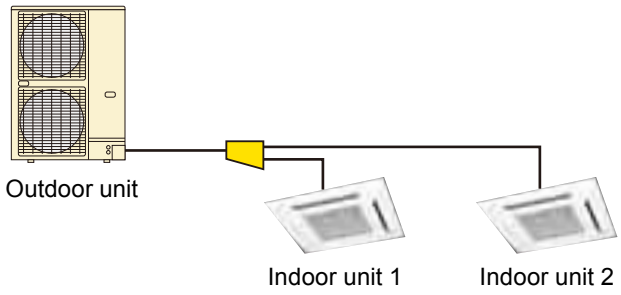

	Model	Capacity (kW)	Total capacity (kW)	Connectable indoor unit capacity		Judgement
				Min.	Max.	
Outdoor unit	AJ∗A54L	15.5	15.5	② 50% 7.8	③ 130% 20.1	②≤ ①≤ ③ 7.8 < 9.0 < 20.1 → OK
Indoor unit 1	AUXB14	4.5	① 9.0			
Indoor unit 2	AUXB14	4.5				

● Example 2 (OK)

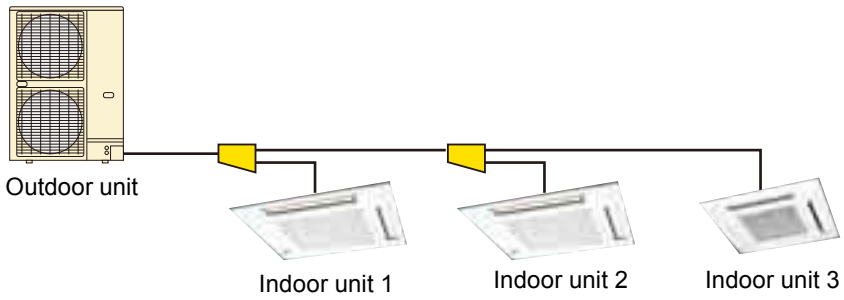

	Model	Capacity (kW)	Total capacity (kW)	Connectable indoor unit capacity		Judgement
				Min.	Max.	
Outdoor unit	AJ∗A54L	15.5	15.5	② 50% 7.8	③ 130% 20.1	②≤ ①≤ ③ 7.8 < 19.8 < 20.1 → OK
Indoor unit 1	AUXD24	7.1	① 19.8			
Indoor unit 2	AUXD24	7.1				
Indoor unit 3	AUXB18	5.6				

● Example 3 (Prohibited)

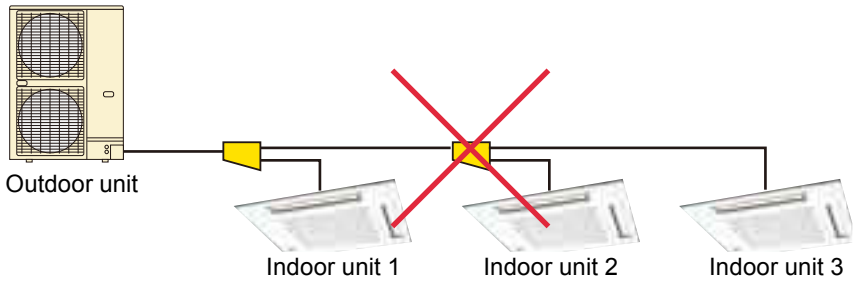

	Model	Capacity (kW)	Total capacity (kW)	Connectable indoor unit capacity		Judgement
				Min.	Max.	
Outdoor unit	AJ∗A54L	15.5	15.5	② 50% 7.8	③ 130% 20.1	③≤ ① 20.1 < 23.2 → Prohibited
Indoor unit 1	AUXA30	9.0	① 23.2			
Indoor unit 2	AUXD24	7.1				
Indoor unit 3	AUXD24	7.1				

SYSTEM DESIGN

● Example 4 (Prohibited)

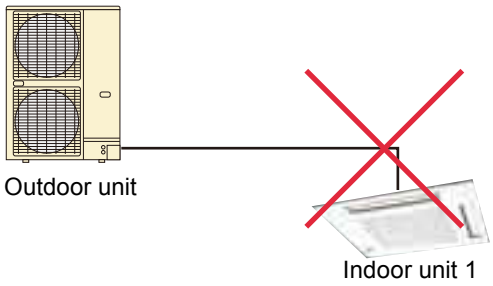

Capacity ratio 90%

	Model	Capacity (kW)	Total capacity (kW)	Connectable indoor unit capacity		Judgement
				Min.	Max.	
Outdoor unit	AJ∗A54L	15.5	15.5	② 50% 7.8	③ 130% 20.1	Prohibited → Because only one indoor unit is connected
Indoor unit 1	AUXA54	14.0	① 14.0			

● Example 5 (Prohibited)

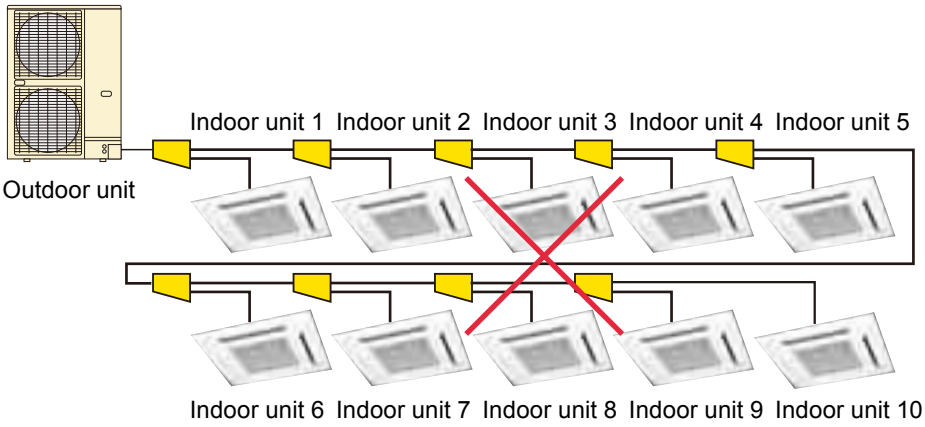

	Model	Capacity (kW)	Total capacity (kW)	Connectable indoor unit capacity		Judgement
				Min.	Max.	
Outdoor unit	AJ∗A54L	15.5	15.5	② 50% 7.8	③ 130% 20.1	Prohibited → Because ten indoor units are connected
Indoor unit 1	AUXB07	2.2	① 22.0			
Indoor unit 2	AUXB07	2.2				
Indoor unit 3	AUXB07	2.2				
Indoor unit 4	AUXB07	2.2				
Indoor unit 5	AUXB07	2.2				
Indoor unit 6	AUXB07	2.2				
Indoor unit 7	AUXB07	2.2				
Indoor unit 8	AUXB07	2.2				
Indoor unit 9	AUXB07	2.2				
Indoor unit 10	AUXB07	2.2				

SYSTEM DESIGN

● Example 6 (OK)

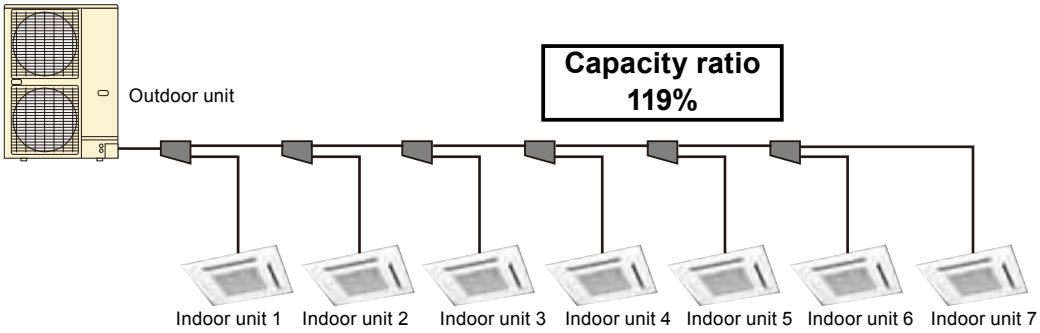

	Model	Cooling capacity (kW)	Total capacity (kW)	Connectable indoor unit capacity		Judgement
				Min.	Max.	
Outdoor unit	AJ∗A54L	15.5	15.5	② 50% 7.8	③ 130% 20.1	②≤ ①≤ ③ 7.8 < 18.4 < 20.1 → OK
Indoor unit 1	AUXB04	2.2 *1	① 18.4			
Indoor unit 2	AUXB04	2.2 *1				
Indoor unit 3	AUXB09	2.8				
Indoor unit 4	AUXB09	2.8				
Indoor unit 5	AUXB09	2.8				
Indoor unit 6	AUXB09	2.8				
Indoor unit 7	AUXB09	2.8				

*1: Calculate the cooling capacity of indoor unit with model code 04 as "2.2 kW".

● Example 7 (Prohibited)

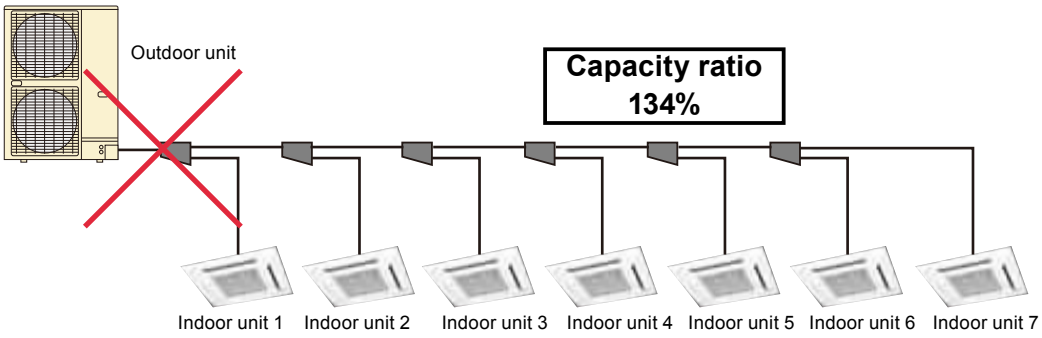

	Model	Cooling capacity (kW)	Total capacity (kW)	Connectable indoor unit capacity		Judgement
				Min.	Max.	
Outdoor unit	AJ∗A54L	15.5	15.5	② 50% 7.8	③ 130% 20.1	③< ① 20.1 < 20.8 → Prohibited
Indoor unit 1	AUXB04	2.2 *1	① 20.8			
Indoor unit 2	AUXB04	2.2 *1				
Indoor unit 3	AUXB12	3.6				
Indoor unit 4	AUXB12	3.6				
Indoor unit 5	AUXB12	3.6				
Indoor unit 6	AUXB09	2.8				
Indoor unit 7	AUXB09	2.8				

*1: Calculate the cooling capacity of indoor unit with model code 04 as "2.2 kW".

SYSTEM DESIGN

1-2. VRF NETWORK SYSTEM

■ MAXIMUM WIRING LENGTH OF VRF NETWORK SYSTEM

Transmission line	Maximum wiring length
Total wiring length of transmission	3600m
Maximum wiring length between units	400m
Total wiring length in 1 segment *	500m

	VRF network system	segment *
Wiring length	3600m	500m
Number of unit	400	64

∗ Segment: Please refer to ■MAXIMUM CONNECTION OF NETWORK SEGMENT for network segment figure and explanation.

■ THE MAXIMUM CONNECTABLE UNIT

● Outdoor unit and indoor unit

	Maximum connectable units in one VRF network system
Outdoor unit	100
Indoor unit	400

SYSTEM DESIGN

■ CONTROLLER AND CONVERTOR

				Model	Maximum connectable units in one VRF network system	Remarks	
Controller	Central Control	System Controller	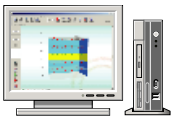	UTY-APGX	1	*1:Note	Max.controllable VRF network system : 4 Max.controllable remote controller groups : 1600 per 4 VRF network system Max.controllable indoor unit : 1600 per 4 VRF network system Max.controllable groups : 1600 per 4 VRF network system
		Touch Panel Controller		UTY-DTG∗	16	*2:Note	Max.controllable remote controller groups : 400 Max.controllable indoor unit : 400 Max.controllable groups : 400
		Central Remote Controller		UTY-DCG∗	16		Max.controllable indoor unit : 100 Max.controllable groups : 16
		Group Remote Controller		UTY-CGG∗	(64)		When Group Remote Controller is used, Network Convertor (UTY-VGGXZ1) is required. Max controllable remote controller groups : 8 Max controllable indoor units : 18
	Individual Control	Wired Remote Controller		UTY-RNK∗			Max controllable indoor units : 9
		Simple Remote Controller (with master control)		UTY-RSK∗			Max controllable indoor units : 9
		Simple Remote Controller (without master control)		UTY-RHK∗			Max controllable indoor units : 9
		Wireless Remote Controller		UTY-LNH∗			

*1 Note: Different VRF series may be connected for each of the 4 VRF networks supported by the unit, but different series may not coexist within the same network.
(V-II Series and J-II Series can exist together on same network. V Series and S Series can exist together on same network, too.)

*2 Note : For one VRF network system, total number of Touch Panel Controller, Central Remote Controller, Network Convertor for Group Remote Controller is 16, including one Network Convertor for LonWorks®.

SYSTEM DESIGN

			Model	Maximum connectable units in one VRF network system	Remarks	
Adaptor / Convertor	Signal Amplifier		UTY-VSGXZ1	8		The signal amplifier is required when 500m or more in transmission line length or connected unit exceeds 64units.
	Network Convertor		UTY-VGGXZ1	Used for connecting split system : 100	Total number of refrigerant system and Network convertor is maximum 100.	Max connectable Single split or Big multi type in a UTY-VGGXZ1 : 16 units.
				Used for connecting Group Remote Controller : 16	*2:Note	Max connectable Group Remote Controller : 4 units. One Network Convertor (UTY-VGGXZ1) covers 2 refrigerant systems.
	Network Convertor for LonWorks®		UTY-VLGX	1		Max controllable indoor units : 128
	BACnet® Gateway		UTY-ABGX	1	*1:Note	Max.controllable VRF network system : 4 Max.controllable remote controller groups : 1600 per 4 VRF network system Max.controllable indoor unit : 1600 per 4 VRF network system Max.controllable groups : 1600 per 4 VRF network system
	External Switch Controller		UTY-TEKX			Max connectable indoor units : 16
Service & Maintenance	Service Tool		UTY-ASGX	1	1 Service Tool or 1 Web Monitoring Tool can be connected.	PC : Field supplied. USB adaptor is required.
	Web Monitoring Tool		UTY-AMGX		*1:Note.	Web Monitoring Tool: Internet explorer 6.0 or higher. PC : Field supplied. USB adaptor is required. Up to 4 VRF network system can be observed with one Web Monitoring Tool.

*1 Note: Different VRF series may be connected for each of the 4 VRF networks supported by the unit, but different series may not coexist within the same network.
(V-II Series and J-II Series can exist together on same network. V Series and S Series can exist together on same network, too.)

*2 Note : For one VRF network system, total number of Touch Panel Controller, Central Remote Controller, Network Convertor for Group Remote Controller is 16, including one Network Convertor for LonWorks®.

SYSTEM DESIGN

■ MAXIMUM CONNECTION OF NETWORK SEGMENT

● Network segment : divided network by signal amplifier

- In the following case, signal amplifier is required.

(1) When the total length of the transmission line exceeds 500 m.

(2) When the number of total unit*1 exceed over 64 units.

- When a signal amplifier is installed, network is divided into two network segments.

Network segments mean divided block which has been connected with signal amplifier within above condition.

In a network segment(NS), divided by a signal amplifier, have to keep the following limitation.

Segment inside	Limitation
Transmission line	500m or less
Number of unit *1 (See the next page)	64 or less
Terminal resistor	1

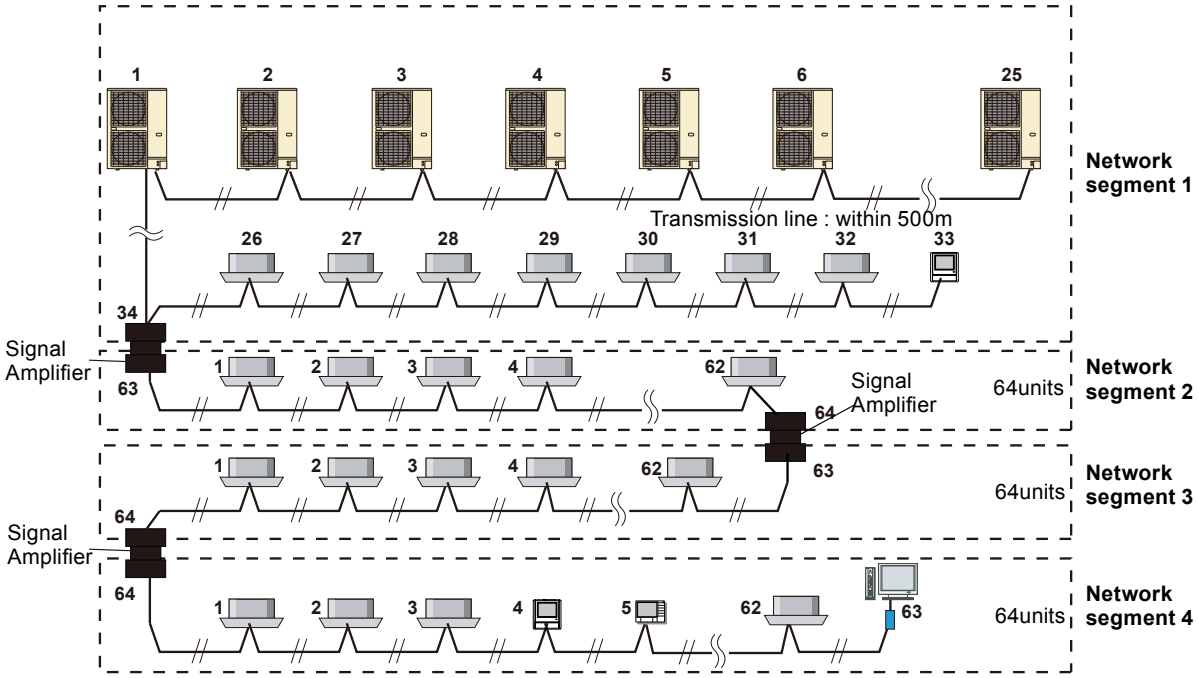

● Caution

VRF network system should keep both of number of unit and wiring length.
When system exceeds either number of unit or wiring length, system should be devided.
Different VRF series may not coexist within the same network.

SYSTEM DESIGN

● Meaning of unit

		Model name	Unit
Outdoor unit	4HP	AJ✳A40LALH	○
	5HP	AJ✳A45LALH	○
	6HP	AJ✳A54LALH	○
All indoor unit		-	○
Controller	System controller	UTY-APGX	○
	Touch panel controller	UTY-DTG*	○
	Central Remote controller	UTY-DCG*	○
	Group remote controller	UTY-CGG*	×
	Wired remote controller	UTY-RNK*	×
	Simple remote controller (With operation mode)	UTY-RSK*	×
	Simple remote controller (Without operation mode)	UTY-RHK*	×
	Wireless remote controller	UTY-LNH*	×
	IR receiver unit for Duct	UTB-*WC	×
	IR receiver unit for Cassette	UTY-LRHYA1	×
Convertor	External switch controller	UTY-TEKX	×
	Network convertor	UTY-VGGXZ1	○
	Network convertor for LonWorks®	UTY-VLGX	○
	BACnet® Gateway	UTY-ABGX	○
	Signal amplifier	UTY-VSGXZ1	○
Maintenance	Service tool	UTY-ASGX	○
	Web monitoring tool	UTY-AMGX	○
Option	Others optional parts	-	×

○: It should be count

×: It should not be count

SYSTEM DESIGN

SYSTEM DESIGN

■ THE MAXIMUM WIRING LENGTH OF UNIT

Name	Model	Maximum wiring length		
Network convertor	UTY-VGGXZ1	Total length of group remote controller cable to convertor	100m	Used for group remote controller
		Remote controller to UTY-VGGXZ1	100m	Used for single split Airconditioner
		Indoor unit to UTY-VGGXZ1	100m	
Signal amplifier	UTY-VSGXZ1	In each network segment	500m	
External switch controller	UTY-TEKX	External switch to UTY-TEKX	50m	Max.connectable 16 indoor units. 2 Remote controllers can be used jointly.
		Indoor unit to UTY-TEKX	25m	
Wired, Simple remote controller	UTY-RNK* UTY-RSK* UTY-RHK*	Remote controller cable	500m	

1-3. MOUNTING POSITION

■ OUTDOOR UNIT

For the air conditioner to operate satisfactorily, install it as outlines in installation manual.

● Outdoor unit mounting position

- A position where satisfies the mounting space described in “chapter 3. 3 Installation space".
- A position where the unit can be installed horizontally.
- A position with enough space for performing pipe work, service and maintenance.
- A position where satisfies the pipe limitations of height and length between the outdoor units to be connected

● Outdoor unit mounting limitation

- A position that is not exposed to strong or seasonal winds.
- A position where the blown air does not accumulate.
- A position where there are no obstructions to the air near to the inlet and outlet.
- A position not exposed to radiation from other heat sources.
- A position where the discharge air will not affect animals or plants.
- A position where the noise and hot air will not disturb the neighbour.
- A position with strong installation fixings, which can sufficiently bear the product weight.
- A position that does not transmit noise or vibration.
- A position where drain water discharge is not a problem.
- A position where snow does not accumulate.
- A position not easily affected by electrical noise.
- A position out of reach of children.
- A position where there is no danger of the generation, influx or accumulation of flammable gas.
- A position that does not have a special environment such as large amounts of oil, vapor or sulfide gas.

● Precaution for outdoor unit mounting position

- Mount the outdoor unit in a position where its tilt is 3 degrees or less.
- When mounting units on each floor or multiple units, secure enough outlet space to prevent a short circuit effect.
- In cold or snowy regions, make sure that the mount is high enough and install a snow protection hood.
- Drain water is discharged from the outdoor unit during operation, so make sure that this drain water is possible to flow.
- Use material such as vibration-resistant rubber to prevent the transmission of vibration to the floor.
- Securely fix the unit when it may be in a position exposed to strong winds.

SYSTEM DESIGN

■ INDOOR UNIT

For the air conditioner to operate satisfactorily, install it as outlines in installation manual.

● Indoor unit mounting position

- Decide the mounting position with the customer
- Install the unit level on a strong wall, floor, ceiling which is not subject to vibration.
- The inlet and outlet ports should not be obstructed. The air should be able to blow all over the room.
- Install the unit where the connection pipe can be easily installed.
- Install the unit where the drain pipe can be easily installed.
- Take servicing, etc. into consideration and leave the spaces. Also install the unit where the filter can be removed.
- Install the unit where satisfy the pipe length and hight.

● Indoor unit mounting limitation

- Install at a place that can withstand the weight of the indoor unit and install positively so that the unit will not topple or fall.
- Do not install the unit where there is the danger of combustible gas leakage.
- Do not install the unit near heat sources and the location with high temperature.
- Mount with the lowest moving parts at least 2.4m above floor or grade level.
- Do not install the unit near a source of heat, steam, or flammable gas.
- Do not use the unit for air conditioning or saving precision instrument, food, art, plants and animal as special place.
- If children may approach the unit, take preventive measures so that they cannot reach the unit.
- Do not install where there is oily smoke, machine oil (i.e. factory), salty environment with direct sea breeze, and too much of dust.
- Install the unit where drainage does not cause any trouble.
- Welding parts may be fretted if the unit is installed where corrosive gas such as sulphurous acid gas is generated.
- Control may not operate correctly if the unit is installed near machinery which emit electromagnetic wave.
- Install the unit in a well-ventilated place avoiding rains and direct sunlight.
- Install the unit where air from the outlet and noise do not disturb the neighbour.
- Install the indoor and outdoor units, power wiring, signal wiring and remote control wiring 1 m away from television and radio to avoid distorted images and noise. (However, distorted noise may not be avoidable even if units and wiring mentioned above are installed 1m away from television and radio depending on conditions of electromagnetic disturbance.)
- When installing an indoor unit in a small room, a countermeasure must be taken to keep refrigerant concentration limitations will never be exceeded even if there is a refrigerant leak.
- A sound might be heard from the indoor unit such as a refrigerant flowing sound. For using in small and quiet room such as bed room or hotel guest room, select the unit which has not exposed inside the room (Ex. Duct type) or the unit which connects EV kit separately (Ex. Compact wall mounted type (EEV external model) + EV kit).

SYSTEM DESIGN

2. PIPING DESIGN

2-1. IMPORTANT ITEMS WHEN USING REFRIGERANT R410A

R410A operates at higher pressure and has less solubility with mineral oil than traditional R22 refrigerant. Therefore, the lubricant and a part of pipe material are different. Some special tools are necessary.

■ REFRIGERANT PIPING MATERIAL AND WALL THICKNESS

It is necessary to use seamless copper tubes for refrigerant use.
Thickness of tubes are shown in table below.
Endurance pressure of the pipe must be 4.2 MPa.

Nominal Diameter	(in)	1/4"	3/8"	1/2"	5/8"	3/4"
Outside Diameter	(mm)	6.35	9.52	12.70	15.88	19.05
Material		JIS H3300 C1220T-O or equivalent *1				
Wall Thickness *2	(mm)	0.8	0.8	0.8	1.0	1.2

*1: Allowable tensile stress ≥ 33 (N/mm^2)
*2: Endurance pressure of the pipe must be 4.2 MPa.

Please select the pipe size in accordance with regional standard.

■ LUBRICANT

Refrigerant	R410A (Mixed refrigerant)
Lubricant	Synthetic oil

■ TOOLS

R410A work requires a number of special tools. Since the tools (with *3 symbol) for R22 work cannot be used for R410A, prepare them beforehand.

Tool name	Process and application	
Pipe cutter	Pipe cutting	Refrigerant piping work
Flaring tool *3	Pipe flaring work	
Torque wrench *3	Flare nut connection	
Expander	Expansion at pipe connection	
Pipe bender	Pipe bending work	
Nitrogen gas	Pipe interior oxidation prevention	Air tightness test
Welder	Pipe brazing	
Gauge manifold *3	Vacuum evacuation and refrigerant charging Operation check	Air tightness test ~ Refrigerant additional charging
Charging hose *3		
Vacuum pump (with adaptor) *3		Vacuum drying
Electronic scale for refrigerant charging		Refrigerant additional charging
Gas leak tester *3	Gas leakage test	

*3: Please refer to a service manual for details.

SYSTEM DESIGN

■ WORK FLOW (EXAMPLE)

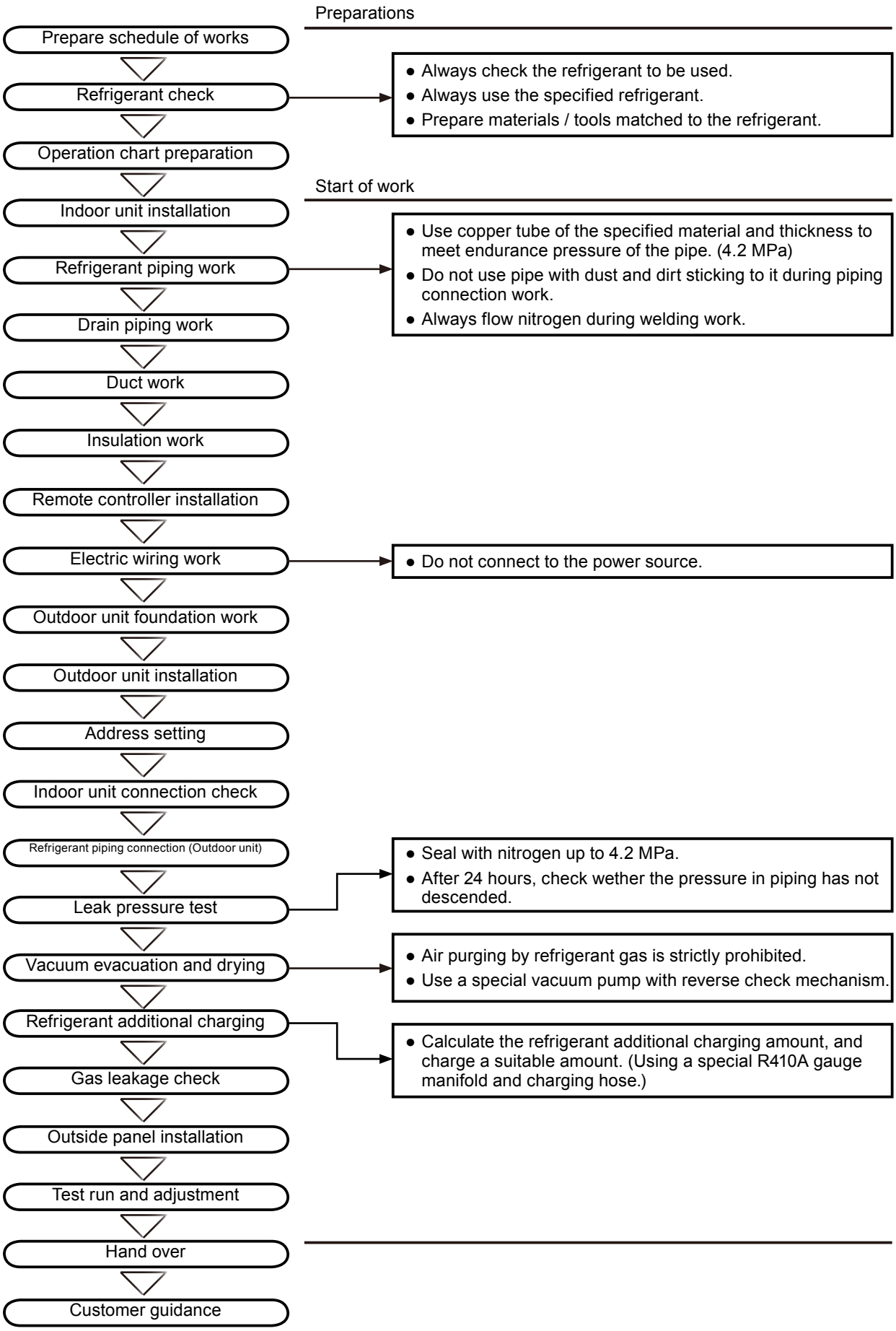

SYSTEM DESIGN

2-2. PIPING LIMITATION

■ LIMITATION

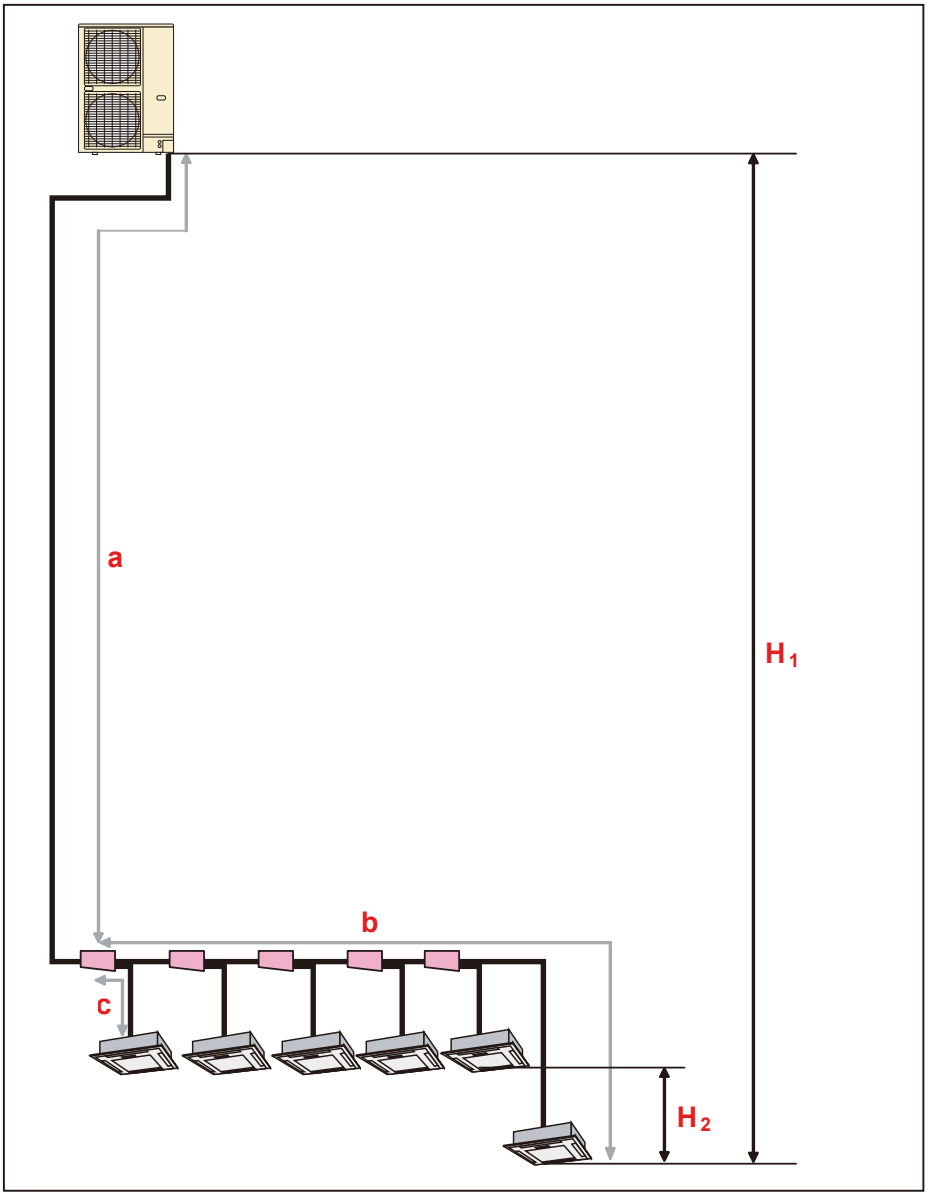

Limitation			Diagram
Maximum allowable pipe length (actual pipe length)	Total pipe length	180m or less *1	Total
	Between outdoor unit and the farthest indoor unit	120m or less	a + b
	Between the first separation tube and the farthest indoor unit	40m or less	b
	Between outdoor unit and the nearrest indoor unit	5m or more	a + c
	Between outdoor unit and the first seperation tube	3m or more	a
Maximum allowable height difference	Between outdoor unit and indoor unit	30m or less	H1
	Between indoor unit	15m or less	H2

＊1 : Total pipe length is limited by the condition that total refrigerant amount should not exceed 15.7kg.

SYSTEM DESIGN

■ CAUTION

Keep the "piping limitation" for correct operation.

● Allowable height difference:

If the height difference between the indoor unit and outdoor unit is larger than the allowable value:

- ∗ The pressure loss will be larger → Insufficient cooling and heating
- ∗ The refrigerant in liquid pipe will flush → Refrigerant flow noise generate at indoor unit
- ∗ The refrigerant oil will not return → Insufficient refrigerant oil resulting in compressor damage

If the height difference between indoor unit is larger than the allowable value:

- ∗ The refrigerant flow balance will be poor → Insufficient cooling and heating (poor balance)
- ∗ Refrigerant oil will collect in the piping or non-operating indoor units
  → Insufficient refrigerant oil resulting in compressor damage

● Pipe length:

If the pipe length is longer than prescribed:

- ∗ The pressure loss will be larger → Insufficient cooling and heating
- ∗ Too much refrigerant will be charged → Liquid backs up resulting in compressor damage
- ∗ The refrigerant oil will not return → Insufficient refrigerant oil resulting in compressor damage

● Pipe size:

If the pipe size is larger than designated size:

- ∗ The refrigerant flow velocity will drop. Refrigerant oil will not return to the outdoor unit.
  → Insufficient refrigerant oil resulting in compressor damage
- ∗ The refrigerant in liquid pipe will flush easily → Insufficient cooling and heating

If the pipe size is smaller than designated size:

- ∗ The refrigerant circulation volume will drop → Insufficient cooling and heating
- ∗ The pressure loss will be larger → Insufficient cooling and heating

● Indoor unit connected capacity:

If the indoor unit connected capacity is larger than the system capable capacity:

- ∗ Insufficient system performance → Insufficient cooling and heating
- ∗ When heating, refrigerant will collect in non-operating indoor units resulting in an insufficient refrigerant circulation volume → Insufficient cooling and heating
- ∗ The refrigerant oil will not return → Compressor damage

If the indoor unit connected capacity is too small compared to the system capacity:

- ∗ The liquid return will be too great → Compressor damage
- ∗ The refrigerant will concentrate in the operating unit

→ Continuous operation will become difficult due to triggering of the protection in response to the pressure high-rise, etc., and noise will be generated by the refrigerant flow when heating

SYSTEM DESIGN

2-3. PIPE SIZE

■ PIPE DIAMETER, RECOMMENDED MATERIAL AND WALL THICKNESS

Nominal Diameter	(in)	1/4"	3/8"	1/2"	5/8"	3/4"
Outside Diameter	(mm)	6.35	9.52	12.70	15.88	19.05
Material		JIS H3300 C1220T-O or equivalent *1				
Wall Thickness *2	(mm)	0.8	0.8	0.8	1.0	1.2

*1: Allowable tensile stress ≥ 33 (N/mm^2)
*2: Endurance pressure of the pipe must be 4.2 MPa.

Please select the pipe size in accordance with regional standard.

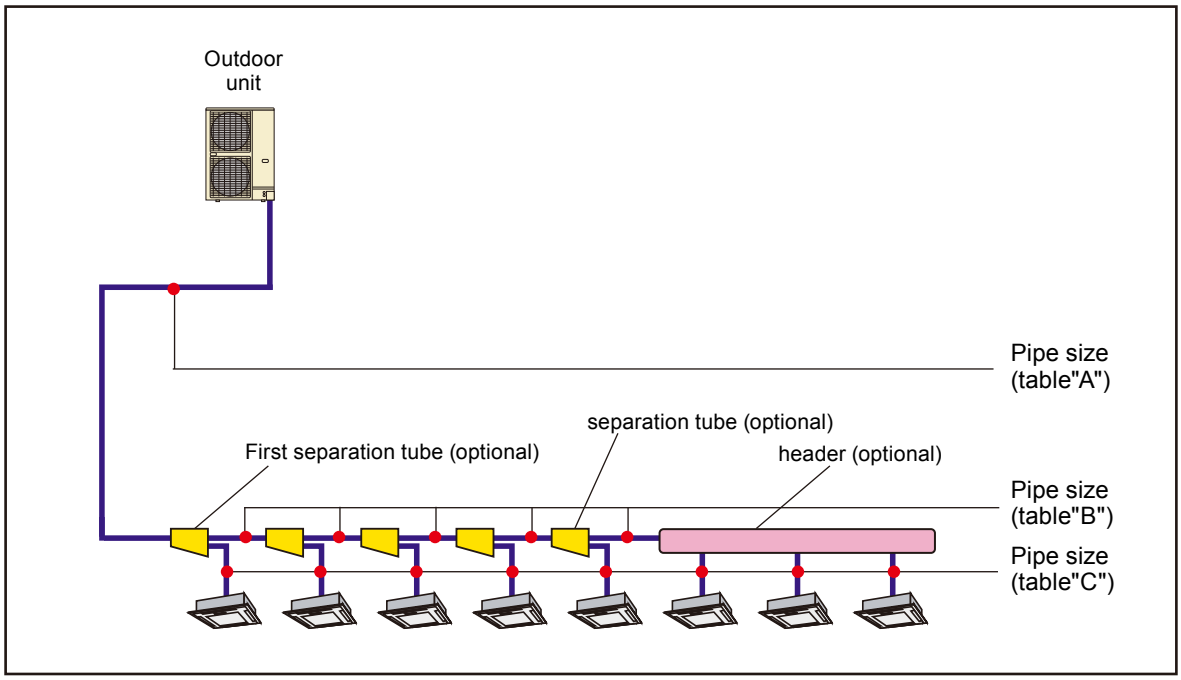

■ PIPE SIZE SELECTION

- **Caution**

After referring to "COOLING CAPACITY TABLE" followed, select each Pipe size, Separation tube and Header from "COOLING CAPACITY TABLE" of outdoor unit and Indoor unit connected in the system.

● Pipe size table "A"

(Between outdoor unit and the first seperation tube (header))

HP	Model code	Outdoor unit cooling capacity (kW)	Outside diameter mm (in)			
			Between outdoor unit and the farthest indoor unit < 90m		Between outdoor unit and the farthest indoor unit ≥ 90m	
			Liquid pipe	Gas pipe	Liquid pipe	Gas pipe
4	40	12.1	9.52 (3/8")	15.88 (5/8")	9.52 (3/8")	19.05 (3/4")
5	45	14.0	9.52 (3/8")	15.88 (5/8")	9.52 (3/8")	19.05 (3/4")
6	54	15.5	9.52 (3/8")	19.05 (3/4")	9.52 (3/8")	19.05 (3/4")

SYSTEM DESIGN

● Pipe size table "B"

(Between separation tube to separation tube (header))

Total cooling capacity of indoor unit (kW) *1	Outside diameter mm (in)	
	Liquid pipe	Gas pipe
4.4 to 11.1	9.52 (3/8")	15.88 (5/8")
11.2 to 20.1	9.52 (3/8")	19.05 (3/4")

∗ If the selected pipe diameter between separation tubes (based on table "B") becomes larger than the pipe diameter between outdoor unit and the first separation tube (based on table "A"), please select the pipe whose diameter is equal to the one between outdoor unit and the first separation tube.

(If pipe diameter B > A, select pipe size from table A)

∗ "Total cooling capacity of indoor unit" is the total value for the cooling capacity of indoor unit connected downstream.

*1: Calculate the cooling capacity of indoor unit with model code 04 (Ex. AUXB04) as "2.2 kW".

● Pipe size table "C"

(Between separation tube (header) to indoor unit)

Model code	Cooling capacity of indoor unit (kW) *1	Outside diameter mm (in)	
		Liquid pipe	Gas pipe
04, 07, 09, 12, 14	2.2, 2.8, 3.6, 4.5	6.35 (1/4")	12.70 (1/2")
18, 24, 30	5.6, 7.1, 9.0	9.52 (3/8")	15.88 (5/8")
36, 45, 54 *2	11.2, 12.5, 14.0	9.52 (3/8")	19.05 (3/4")

*1: Calculate the cooling capacity of indoor unit with model code 04 (Ex. AUXB04) as "2.2 kW".
*2: If the selected pipe diameter between separation tube (header) to indoor unit (based on table "C") becomes larger than the pipe diameter between separation tube to separation tube (header) (based on table "B"), please select the pipe whose diameter is equal to the one between separation tube to separation tube (header).

(If pipe diameter C > B, select pipe size from table B)

It is necessary to change a connection pipe diameter using Reducer.

SYSTEM DESIGN

■ INDOOR SIDE BRANCH KIT

● Separation tube

Separation tube
UTP-AX090A or UTR-BP090X

● Header

Header	
3-6 Branches	3-8 Branches
UTR-H0906L	UTR-H0908L

● EV kit

These models are used for Wall Mounted Type(EEV external model)

Application model	Model
AS∗E04GACH AS∗E07GACH AS∗E09GACH	UTR-EV09XB
AS∗E12GACH AS∗E14GACH	UTR-EV14XB

SYSTEM DESIGN

■ COOLING CAPACITY TABLE

● Outdoor unit

HP	Cooling capacity (kW)	Model name
4	12.1	AJ∗A40LALH
5	14.0	AJ∗A45LALH
6	15.5	AJ∗A54LALH

● Indoor unit

Type	Cooling capacity (kW)	Model name
Compact Cassette	2.2 *1	AUXB04GALH
	2.2	AUXB07GALH
	2.8	AUXB09GALH
	3.6	AUXB12GALH
	4.5	AUXB14GALH
	5.6	AUXB18GALH
	7.1	AUXB24GALH
Cassette	5.6	AUXD18GALH
	7.1	AUXD24GALH
	9.0	AUXA30GALH
	11.2	AUXA36GALH
	12.5	AUXA45GALH
	14.0	AUXA54GALH
Low Static Pressure Duct / Concealed Floor	2.2	ARXB07GALH
	2.8	ARXB09GALH
	3.6	ARXB12GALH
	4.5	ARXB14GALH
	5.6	ARXB18GALH
Slim Duct / Slim Concealed Floor	2.2 *1	ARXD04GALH
	2.2	ARXD07GALH
	2.8	ARXD09GALH
	3.6	ARXD12GALH
	4.5	ARXD14GALH
	5.6	ARXD18GALH
	7.1	ARXD24GALH
Medium Static Pressure Duct	7.1	ARXA24GBLH
	9.0	ARXA30GBLH
	11.2	ARXA36GBLH
	12.5	ARXA45GBLH

Type	Cooling capacity (kW)	Model name
High Static Pressure Duct	11.2	ARXC36GATH
	12.5	ARXC45GATH
Floor / Ceiling	3.6	AB∗A12GATH
	4.5	AB∗A14GATH
	5.6	AB∗A18GATH
	7.1	AB∗A24GATH
Ceiling	9.0	AB∗A30GATH
	11.2	AB∗A36GATH
	12.5	AB∗A45GATH
	14.0	AB∗A54GATH
Wall Mounted (EEV external model)	2.2 *1	AS∗E04GACH
	2.2	AS∗E07GACH
	2.8	AS∗E09GACH
	3.6	AS∗E12GACH
	4.5	AS∗E14GACH
Wall Mounted	2.2 *1	AS∗A04GACH
	2.2	AS∗A07GACH
	2.8	AS∗A09GACH
	3.6	AS∗A12GACH
	4.5	AS∗A14GACH
	5.6	AS∗A18GACH
	7.1	AS∗A24GACH
	8.0	AS∗A30GACH

*1: Calculate the cooling capacity of indoor unit with model code 04 as "2.2 kW".

SYSTEM DESIGN

2-4. SELECTION OF PIPE HEAT INSULATING MATERIAL

- Always insulate the refrigerant pipe to prevent condensation and water droplets by the refrigerant pipe.
- Decide the thickness of the heat insulating material by referring to the recommended minimum thickness in Table 1. (For installation condition T=32°C(DB),humidity≤70%, humidity≤75%, humidity≤80%, humidity≤85%)
- When the outdoor unit is installed in a higher position than the indoor unit, fill the connecting part gap with putty, etc. to prevent the dew condensation water of the valve of the outdoor unit from flowing to the indoors from the gap between the pipe and the heat insulating material.
- Liquid pipe and gas pipe should be completely insulated with same specification.
- In case not to insulate and not to seal refrigerant pipe completely, it will become the cause of water leak.
- Table1 Size of refrigerant pipe and recommended minimum thickness of heat insulating material (In case a heat insulating material which thermal conductivity is equal to or less than 0.040 W/(m·k) is used.)

		Recommended minimum thickness for heat insulating material (mm)			
Relative humidity		≤70%	≤75%	≤80%	≤85%
Refrigerant pipe Outside diameter mm (in.)	6.35 (1/4")	8	10	13	17
	9.52 (3/8")	9	11	14	18
	12.70 (1/2")	10	12	15	19
	15.88 (5/8")	10	12	16	20
	19.05 (3/4")	10	13	16	21

- When an ambient temperature and relative humidity exceed 32°C (DB)and 85% respectively, please strengthen heat insulation of refrigerant pipe. If necessary put a heat insulation on indoor unit casing. When not strengthening heat insulation of refrigerant pipe, the surface of the heat insulation may be dewed.
- Since gas pipe becomes high temperature at heating operation for heatpump type, please select the heat insulating material which heat-resistant temperature is 120°C or more.

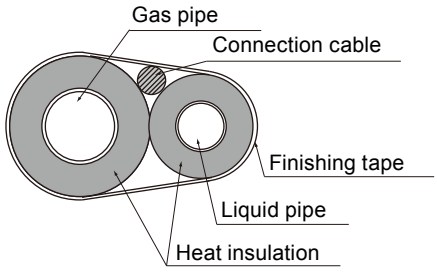

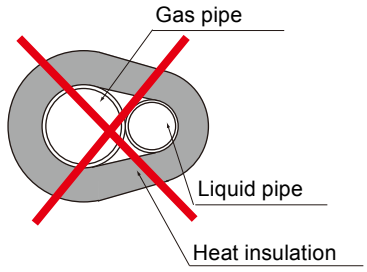

- Make sure that pipe is covered completely by the heat insulation,not expoding to air. Inadequate heat insulation may cause condensation.
- Do not cover heat insulation gas and liquid pipes together as above figure. It may cause condensation and capacity drop by heat loss.

SYSTEM DESIGN

2-5. ADDITIONAL CHARGE CALCULATION

- The outdoor unit is charged refrigerant at the factory.
- Additional refrigerant required to be charged on site depending on pipe length.
- The additional refrigerant charge amount is calculated according to the following formula.
- Round up the calculated result to two decimal places.

■ CALCULATION OF ADDITIONAL CHARGE REFRIGERANT

1. Calculation of additional amount for outdoor unit

Model	HP	b Factory charged amount (kg)
AJ∗A40LALH	4	4.80
AJ∗A45LALH	5	5.30
AJ∗A54LALH	6	5.30

Diameter of liquid pipe (mm)	a Additional amount for pipe length (kg/m)
ø6.35	0.021
ø9.52	0.058

2. Calculation of additional amount for pipe length

A= Total length of ø9.52mm liquid pipe ___ m | a : x 0.058 kg/m ___ kg + Total length of ø6.35mm liquid pipe ___ m | a : x 0.021 kg/m ___ kg = Total ___ kg

3. Calculation of additional charge refrigerant

A = ___ kg Round up A to 2 decimal place.

4. Factory charged amount

B= b : Outdoor unit factory charged amount ___ kg

5. Total refrigerant amount check

C = A + B = ___ kg

Note : Check the total refrigerant amount under the following conditions.

Condition	Computational formula
Total amount of refrigerant ≤ 15.7kg	C ≤ 15.7kg

When total refrigerant amount exceed limitation.

- Reduce pipe length for refrigerant system.
- Change the refrigerant system configuration.

SYSTEM DESIGN

SYSTEM DESIGN

2-6. EXAMPLE OF PIPING DESIGN

■ REFRIGERANT SYSTEM 1

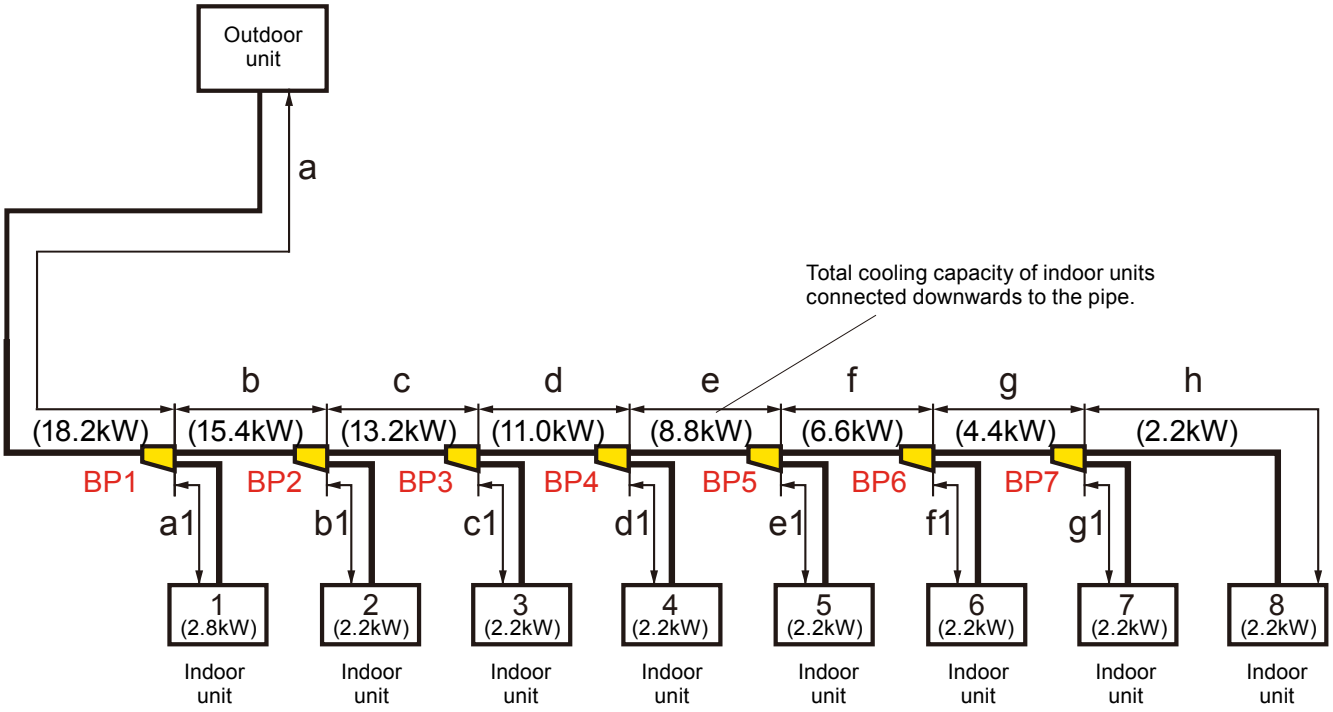

● System configuration (Indoor units)

	1	2	3	4	5	6	7	8	Total Capacity (kW)
Model name	ARXD09	ARXD07	ARXD07	ARXD07	ARXD07	ARXD07	ARXD07	ARXD07	18.2
Capacity (kW)	2.8	2.2	2.2	2.2	2.2	2.2	2.2	2.2	

● System configuration (Outdoor unit)

	Outdoor unit
Model name	AJ∗A54
Capacity (kW)	15.5

● Capacity ratio

(Total indoor unit capacity) / (Total outdoor unit capacity)

= (18.2) / (15.5) = 117.4% (Within 50% to 130%)

● Selection of branch kit

Branch point No.	Model
BP1	UTP-AX090A or UTR-BP090X
BP2	UTP-AX090A or UTR-BP090X
BP3	UTP-AX090A or UTR-BP090X
BP4	UTP-AX090A or UTR-BP090X
BP5	UTP-AX090A or UTR-BP090X
BP6	UTP-AX090A or UTR-BP090X
BP7	UTP-AX090A or UTR-BP090X

Model	Q'ty
UTP-AX090A or UTR-BP090X	7

SYSTEM DESIGN

● Selection of pipe size

	a	a1	b	b1	c	c1	d	d1	e	e1
Liquid pipe	9.52	6.35	9.52	6.35	9.52	6.35	9.52	6.35	9.52	6.35
Gas pipe	19.05	12.70	19.05	12.70	19.05	12.70	15.88	12.70	15.88	12.70
Length (m) Example	40	15	5	10	5	10	5	10	5	10
	f	f1	g	g1	h					
Liquid pipe	9.52	6.35	9.52	6.35	6.35					
Gas pipe	15.88	12.70	15.88	12.70	12.70					
Length (m) Example	5	10	5	10	7					

● Limitation check

	Diagram	Example (m)	Limitation (m)	Judge
Total pipe length	Total	152	180m or less	OK
Between outdoor unit and farthest indoor unit	a+b+c+d+e+f+g+h	77	120m or less	OK
Between the first separation tube and the farthest indoor unit	b+c+d+e+f+g+h	37	40m or less	OK
Between outdoor unit and the nearest indoor unit	a+a1	55	5m or more	OK
Between outdoor unit and the first seperation tube	a	40	3m or more	OK

SYSTEM DESIGN

● Calculation of additional charge refrigerant

1. Calculation of additional amount for pipe length

Liquid pipe size	9.52	6.35
Additional refrigerant (kg/m)	0.058	0.021
Liquid pipe length (m)	70	82

A = (0.058 x 70) + (0.021 x 82) = 5.79 (kg)

2. Factory charged amount

	Model	Factory charged amount (kg)
Outdoor unit	AJ∗A54	5.30

B = 5.30 (kg)

3. Total refrigerant amount check

C = A + B = 5.79 + 5.30 = 11.09(kg) < 15.7 (kg) → OK

Check pipe length and height difference between units by comparing with items shown in "2-2.PIPING LIMITATION".

■ REFRIGERANT SYSTEM 2

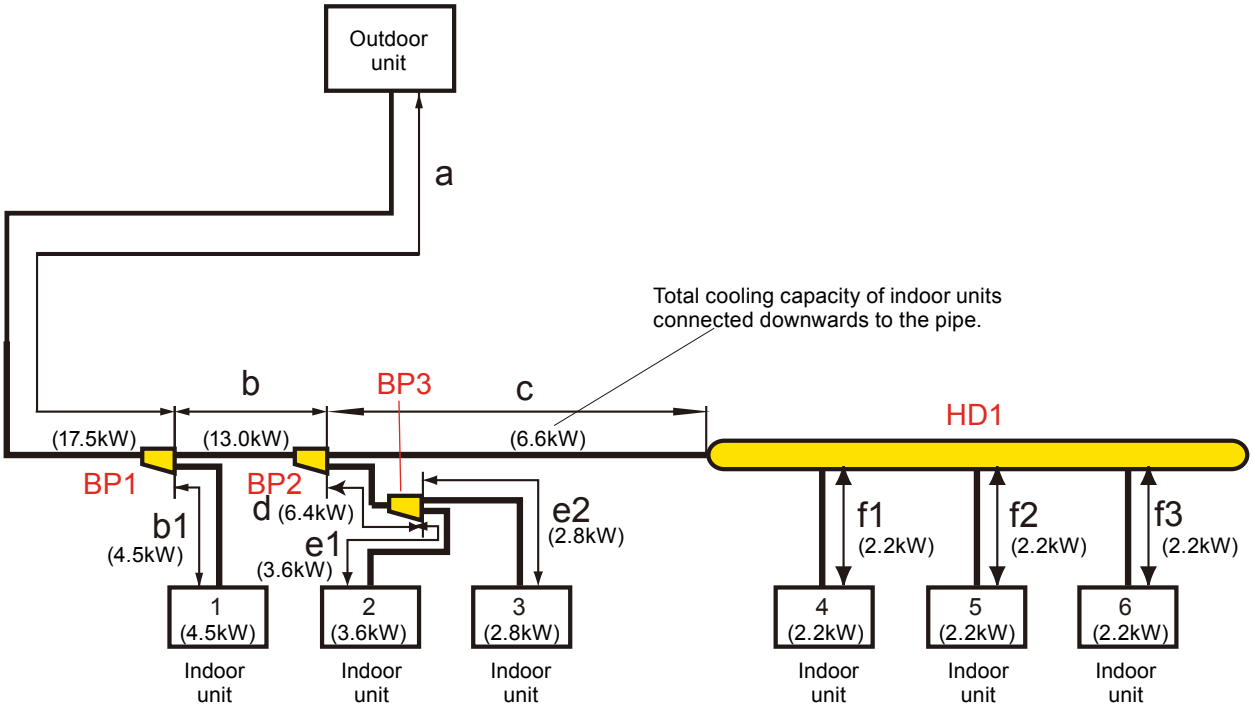

● System configuration (Indoor units)

	1	2	3	4	5	6	Total Capacity (kW)
Model name	ARXD14	ARXD12	ARXD09	ARXD07	ARXD07	ARXD07	17.5
Capacity (kW)	4.5	3.6	2.8	2.2	2.2	2.2	

● System configuration (Outdoor unit)

	Outdoor unit 1
Model name	AJ∗A45
Capacity (kW)	14.0

● Capacity ratio

(Total indoor unit capacity) / (Total outdoor unit capacity)

= (17.5) / (14.0) = 125.0% (Within 50% to 130%)

● Selection of branch kit

Branch point No.	Model
BP1	UTP-AX090A or UTR-BP090X
BP2	UTP-AX090A or UTR-BP090X
BP3	UTP-AX090A or UTR-BP090X
HD1	UTR-H0906L

Model	Q'ty
UTP-AX090A or UTR-BP090X	3
UTR-H0906L	1

SYSTEM DESIGN

● Selection of pipe size

	*a	b	b1	c	d	e1	e2	f1	f2	f3
Liquid pipe	9.52	9.52	6.35	9.52	9.52	6.35	6.35	6.35	6.35	6.35
Gas pipe	19.05	19.05	12.70	15.88	15.88	12.70	12.70	12.70	12.70	12.70
Length (m) Example	60	15	10	15	5	10	5	10	5	10

∗ Pipe size "a" selection : The length that between outdoor unit and the farthest indoor unit.
a + b + c + f3 =100 > 90m

Therefore Gas pipe must be size up from 15.88mm to 19.05mm. (Refer 2-3. PIPE SIZE)

● Limitation check

	Diagram	Example (m)	Limitation (m)	Judge
Total pipe length	Total	145	180m or less	OK
Between outdoor unit and farthest indoor unit	a+b+c+f3	100	120m or less	OK
Between the first separation tube and the farthest indoor unit	b+c+f3	40	40m or less	OK
Between outdoor unit and the nearest indoor unit	a+b1	70	5m or more	OK
Between outdoor unit and the first seperation tube	a	60	3m or more	OK

● Calculation of additional charge refrigerant

1. Calculation of additional amount for pipe length

Liquid pipe size	9.52	6.35
Additional refrigerant (kg/m)	0.058	0.021
Liquid pipe length (m)	95	50

A = (0.058 x 95) + (0.021 x 50) = 6.56 (kg)

2. Factory charged amount

	Model	Factory charged amount (kg)
Outdoor unit	AJ∗A45	5.30

B = 5.30 (kg)

3. Total refrigerant amount check

C = A + B = 6.56 + 5.30 = 11.86 (kg) < 15.7 (kg) → OK

Check pipe length and height difference between units by comparing with items shown in "2-2.PIPING LIMITATION".

SYSTEM DESIGN

■ REFRIGERANT SYSTEM 3

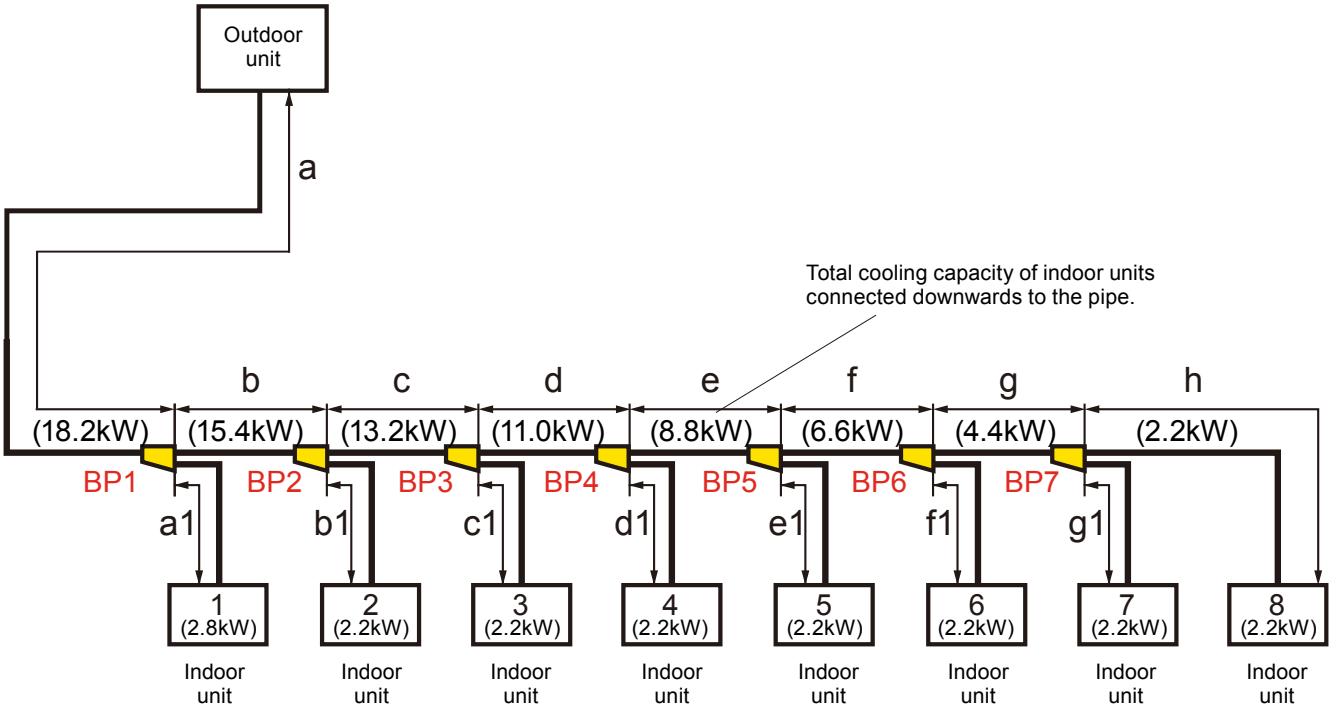

● System configuration (Indoor units)

	1	2	3	4	5	6	7	8	Total Capacity (kW)
Model name	ARXD09	ARXD07	ARXD07	ARXD07	ARXD07	ARXD07	ARXD04	ARXD04	18.2
Capacity (kW)	2.8	2.2	2.2	2.2	2.2	2.2	2.2 *1	2.2 *1	

*1: Calculate the cooling capacity of indoor unit with model code 04 as "2.2 kW".

● System configuration (Outdoor unit)

	Outdoor unit
Model name	AJ∗A54
Capacity (kW)	15.5

● Capacity ratio

(Total indoor unit capacity) / (Total outdoor unit capacity)

= (18.2) / (15.5) = 117.4% (Within 50% to 130%)

● Selection of branch kit

Branch point No.	Model
BP1	UTP-AX090A or UTR-BP090X
BP2	UTP-AX090A or UTR-BP090X
BP3	UTP-AX090A or UTR-BP090X
BP4	UTP-AX090A or UTR-BP090X
BP5	UTP-AX090A or UTR-BP090X
BP6	UTP-AX090A or UTR-BP090X
BP7	UTP-AX090A or UTR-BP090X

Model	Q'ty
UTP-AX090A or UTR-BP090X	7

SYSTEM DESIGN

● Selection of pipe size

	a	a1	b	b1	c	c1	d	d1	e	e1
Liquid pipe	9.52	6.35	9.52	6.35	9.52	6.35	9.52	6.35	9.52	6.35
Gas pipe	19.05	12.70	19.05	12.70	19.05	12.70	15.88	12.70	15.88	12.70
Length (m) Example	40	15	5	10	5	10	5	10	5	10
	f	f1	g	g1	h					
Liquid pipe	9.52	6.35	9.52	6.35	6.35					
Gas pipe	15.88	12.70	15.88	12.70	12.70					
Length (m) Example	5	10	5	10	7					

● Limitation check

	Diagram	Example (m)	Limitation (m)	Judge
Total pipe length	Total	152	180m or less	OK
Between outdoor unit and farthest indoor unit	a+b+c+d+e+f+g+h	77	120m or less	OK
Between the first separation tube and the farthest indoor unit	b+c+d+e+f+g+h	37	40m or less	OK
Between outdoor unit and the nearest indoor unit	a+a1	55	5m or more	OK
Between outdoor unit and the first seperation tube	a	40	3m or more	OK

SYSTEM DESIGN

● Calculation of additional charge refrigerant

1. Calculation of additional amount for pipe length

Liquid pipe size	9.52	6.35
Additional refrigerant (kg/m)	0.058	0.021
Liquid pipe length (m)	70	82

A = (0.058 x 70) + (0.021 x 82) = 5.79 (kg)

2. Factory charged amount

	Model	Factory charged amount (kg)
Outdoor unit	AJ∗A54	5.30

B = 5.30 (kg)

3. Total refrigerant amount check

C = A + B = 5.79 + 5.30 = 11.09(kg) < 15.7 (kg) → OK

Check pipe length and height difference between units by comparing with items shown in "2-2.PIPING LIMITATION".

3. PIPING CONNECTION

3-1. CAUTION OF PIPING

■ CAUTION

Keep the permissible length of every piping limitation to prevent a defect or cooling/heating failure.

● Piping material

- Use the designated size (Diameter & thickness) of refrigerant pipes.
- Those pipes purchased locally may contain dust inside. Please blow out the dust by dried inert gas when using.
- To process the branch, do not use T-shaped pipe, which causes a uneven refrigerant flow.
  Use the optionally available standard branch kit.

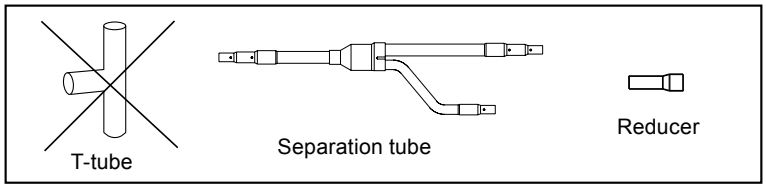

- When replacing the unit, never use piping which has been used for previous installations.
  Only use the new piping.

● Piping process strage

- Be careful to avoid the dust or water falling into the pipe when performing piping process and piping installation.
- When processing the pipe, make the number of bending portion as few as possible, and the bending radius as large as possible.
- If the diameter of the required pipe is different from the branch unit, either cut it out or use the reducer.

● Brazing

- While Brazing the pipes, be sure to blow dry nitrogen gas through them.
- If nitrogen gas is not blown through the pipes while they are being brazed, an oxidized layer may form on the inside of the pipes. If this occurs, the cooling efficiency may decrease and the air conditioner unit (compressor, valves, etc.) cause malfunction.

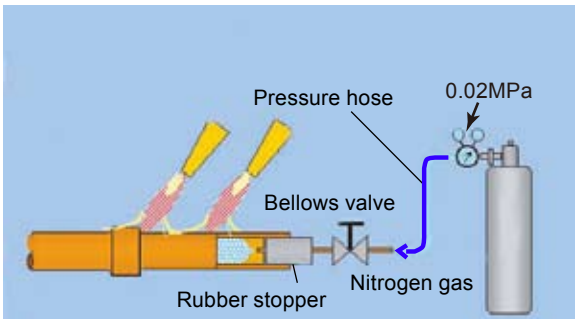

- When brazing the pipes, do not use flux. If the flux is chlorine-based, the pipes will corrode and when the flux contains fluorine, the refrigerant oil will deteriorate, etc. Using the flux has an adverse affect on the refrigerant piping system.
- For brazing materials, use phosphor copper solder that does not require flux.

● Piping treatment

- The pipes vibrate, expand, and contract during operation, so if loads are concentrated in one area, it could cause cracks in the pipes. Provide the pipe supports every 2 to 3m.
- Make sure to insulate the refrigeration pipes separately with ample thickness of heat-resistant polyethylene form etc. For the connecting portion, apply the enough insulation to avoid any gap.

SYSTEM DESIGN

■ CAUTION

● Brazing

While brazing the pipe, be sure to blow dry nitrogen gas through the pipes.

If not used, it will be caused to damage for compressor and clog the strainer and electronic expansion valve.

Example) Inside state of brazing pipe section

Nitrogen gas used	Nitrogen gas used but not sufficient (Oxygen gas still inside the pipe)	Nitrogen gas does not used
		

SYSTEM DESIGN

3-2. PIPING TO OUTDOOR UNIT

■ OPENING A KNOCKOUT HOLE

⚠ CAUTION
● Be careful not to deform or scratch the panel while opening the knock out holes.
● To protect the piping insulation after opening a knock out hole, remove any burrs from the edge of the hole. It is recommended to apply rust prevention paint to the edge of the hole.

- Pipes can be connected from 4 directions, front, lateral side, rear side and bottom. (Fig. A)
- When connecting at the bottom, remove the service panel and piping cover on the front of the outdoor unit, and open the knock out hole provided at the bottom corner of the piping outlet.
- It can be installed as shown on “Fig. B” cutting out the 2 slits as indicated on “Fig. C”. (When cutting slits, use a steel saw.)

Fig. A

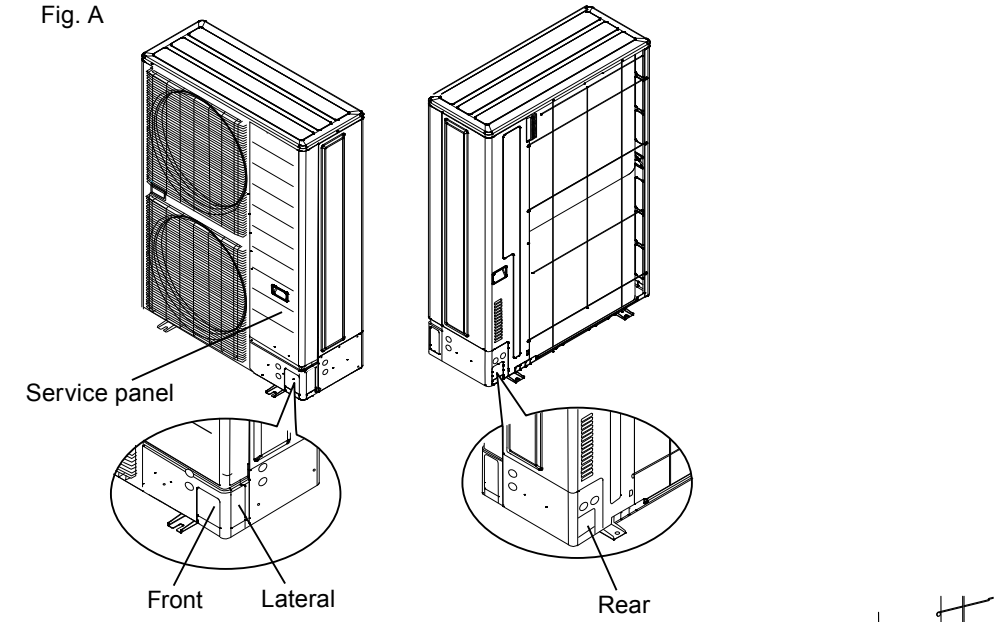

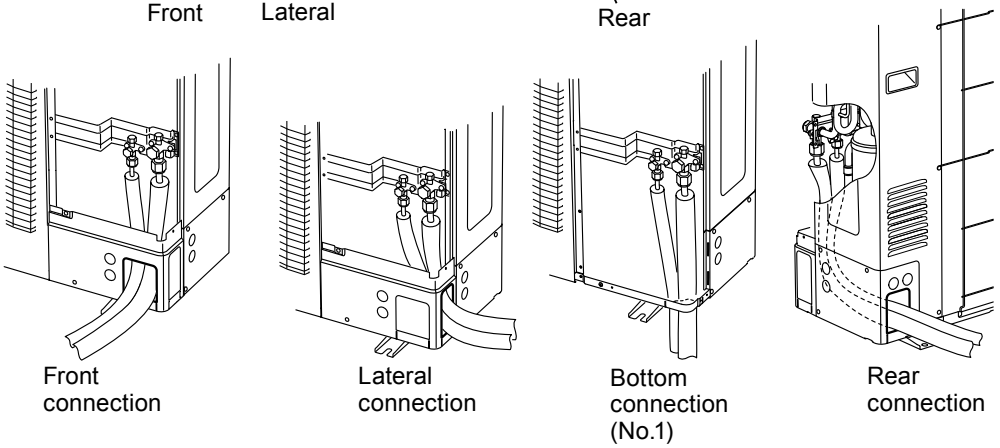

Fig. B

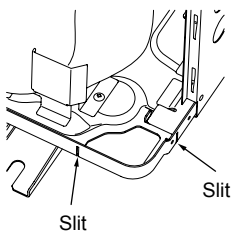

Fig. C

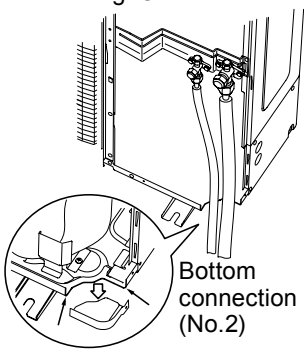

SYSTEM DESIGN

■ PIPE CONNECTION

⚠ CAUTION

- Be sure to install the pipe against the port on the indoor unit and the outdoor unit correctly. If the centering is improper, the flare nut cannot be tightened smoothly. If the flare nut is forced to turn, the threads will be damaged.
- Do not remove the flare nut from the outdoor unit pipe until immediately before connecting the connection pipe.
- After installing the piping, make sure that the connection pipes do not touch the compressor or outer panel. If the pipes touch the compressor or outer panel, they will vibrate and produce noise.

(1) Detach the caps and plugs from the pipes.

(2) Center the pipe against the port on the outdoor unit, and then turn the flare nut by hand.

(3) Tighten the flare nut of the connection pipe at the outdoor unit valve connector.

(4) After tightening the flare nut by hand, use a torque wrench to fully tighten it.

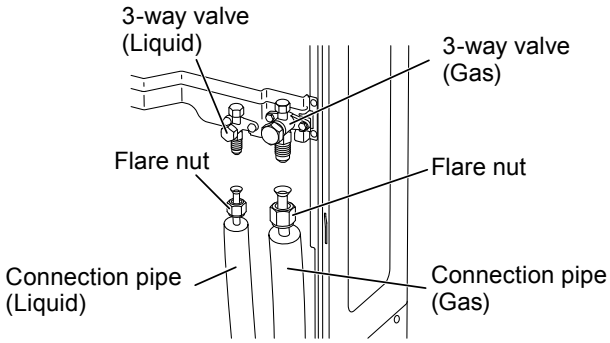

⚠ CAUTION

- Hold the torque wrench at its grip, keeping it in a right angle with the pipe, in order to tighten the flare nut correctly.

- Outer panel may be distorted if fastened only with a wrench. Be sure to fix the elementary part with a spanner and fasten with a wrench (refer to below diagram).
- Do not apply force to the blank cap of the valve or hang a wrench, etc., on the cap. It may cause leakage of refrigerant.

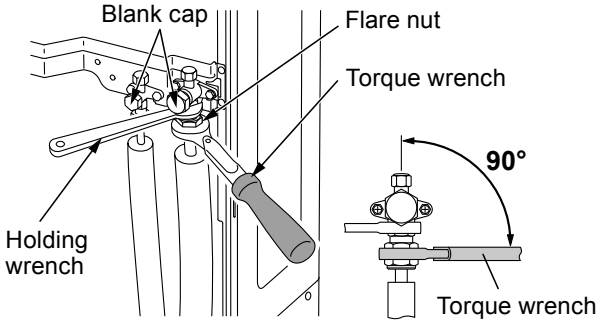

Flare nut [mm (in.)]	Tightening torque [N·m]
6.35 (1/4) dia.	16 to 18
9.52 (3/8) dia.	32 to 42
12.70 (1/2) dia.	49 to 61
15.88 (5/8) dia.	63 to 75
19.05 (3/4) dia.	90 to 110

SYSTEM DESIGN

In the case of AJ∗A54LALH

● It is necessary to change a connection pipe diameter by using Reducer.

(1) Reducer must be brazed outside of the outdoor unit.

(2) Distance between 3-Way-Valve and Reducer ≤ 1m

(3) The part of Reducer do insulation processing after brazing .

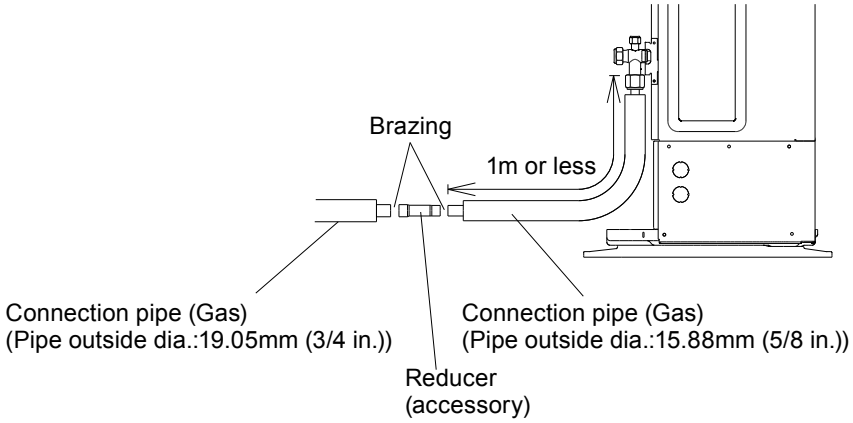

Example. Case of front connection

● Handling precautions for the valves

● Mounted part of Blank cap is sealed for protection.

● Fasten blank cap tightly after opening valves.

Blank cap [mm (in.)]	Tightening torque [N·m]
6.35 (1/4)	20 to 25
9.52 (3/8)	20 to 25
12.70 (1/2)	25 to 30
15.88 (5/8)	30 to 35
19.05 (3/4)	35 to 40

SYSTEM DESIGN

Operating the valves

● Use a hexagon wrench (size 4 mm).

● Opening (1) Insert the hexagon wrench into the valve shaft, and turn it counterclockwise.
(2) Stop turning when the valve shaft can no longer be turned. (Open position)

● Closing (1) Insert the hexagon wrench into the valve shaft, and turn it clockwise.
(2) Stop turning when the valve shaft can no longer be turned. (Closed position)

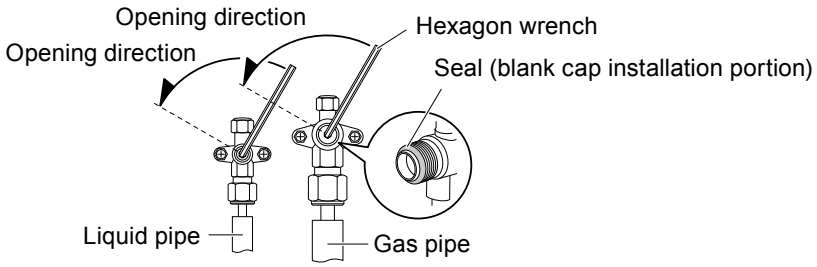

3-3. SEPARATION TUBE

■ INSTALLATION

● Separation tube

Separation tube
UTP-AX090A or UTR-BP090X

● Installation

Use the pipe cutter to cut at the location which matches the piping size when the piping size is different.

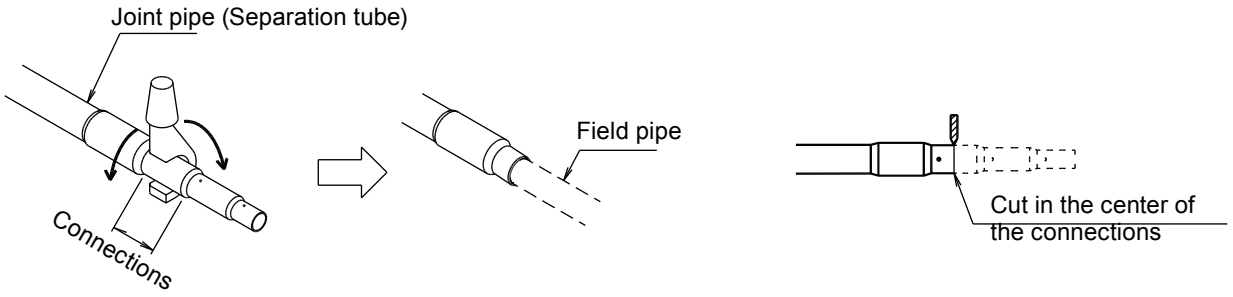

When the pipe size of the separation tube itself does not match, or when piping sizes differ even if it cuts the pipe, use attached Reducer or attached Expander.

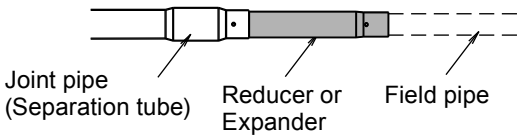

SYSTEM DESIGN

● Restriction when install

Be sure following restriction.

1) Installation angle

Place the separation tubes horizontally or vertically so that the refrigerant separates evenly.

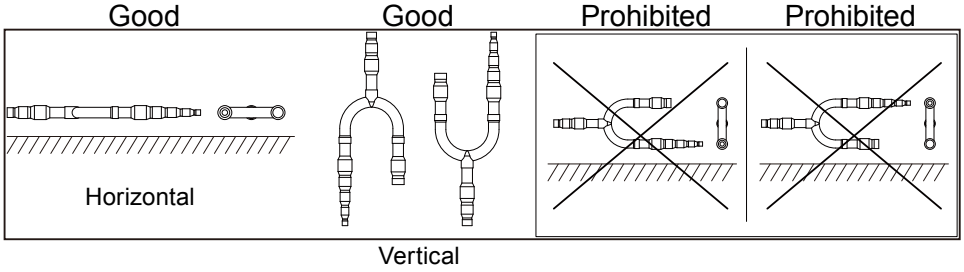

⚠Caution

- If it is placed horizontally, keep it within ± 15°. Otherwise, it will not separate the refrigerant evenly, causing a reduction in performance.

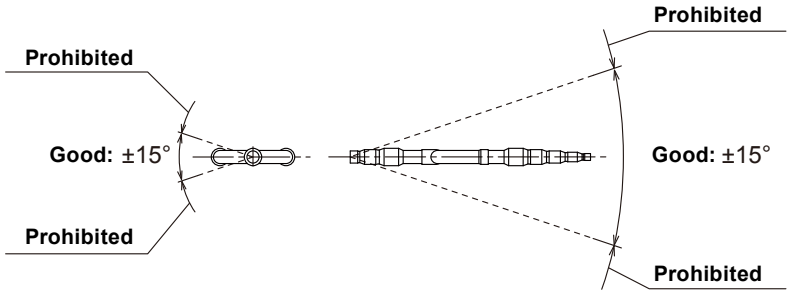

- During piping work, apply nitrogen gas while brazing the pipes. If pipes are brazed without applying nitrogen gas, it will create a large amount of oxidation film, which will cause a critical malfunction.
- To prevent moisture or foreign matter from entering during work, do not leave the piping open.
- Refer to the Installation Manual supplied with the outdoor unit for airtightness test and evacuation procedures.

SYSTEM DESIGN

SYSTEM DESIGN

2) Straight pipe length

A straight pipe (minimum length 0.5m) before separation tube is necessary in order to separation the refrigerant exactly.

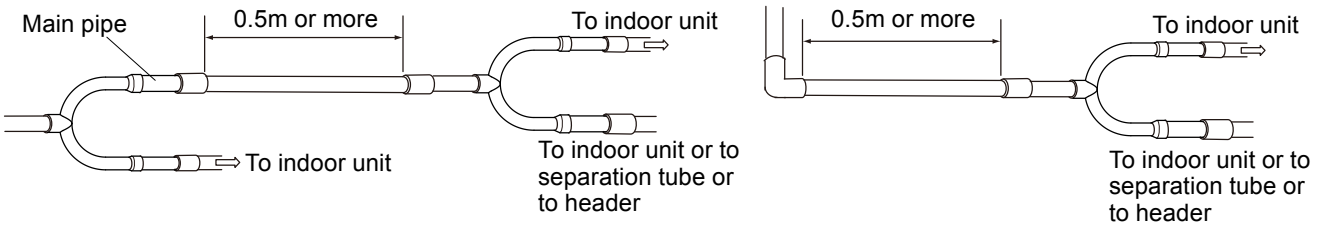

⚠Caution

Keep the distance 0.5m or more for straight part to separation tube, in order to prevent the outdoor unit mulfunction and generation of refrigerant noise

● Heat insulation installation

After brazing the pipes, and leak check use the supplied insulation to insulate them.

1) Remove the protective sheet from the double-stick tape that is affixed to the heat insulation.

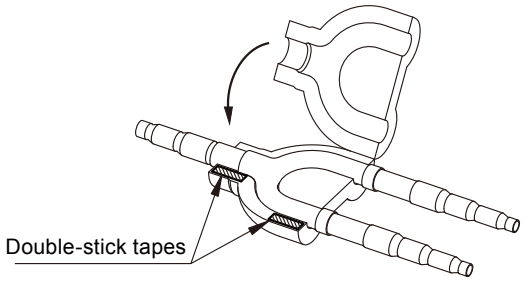

2) Be sure to install the tape (accessory) in each heat insulation to the 2 positions as shown in the following figure.

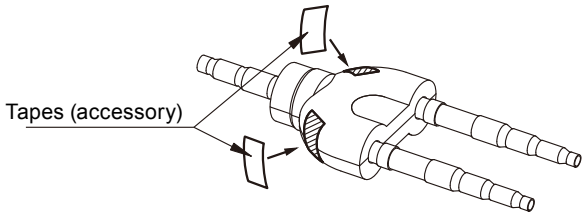

3) Use tape (Field supply) to seal the seam so that there will be no gap at the junction between the aforementioned heat insulation and the heat insulation on the local piping.

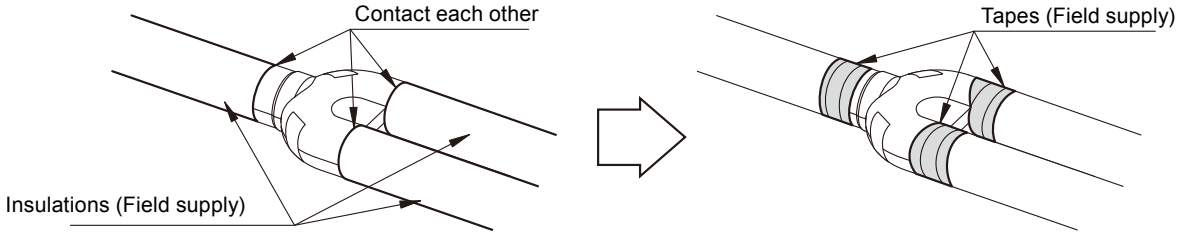

⚠Caution

- Insulate the liquid and gas pipe completely. If not, it may cause the water condensation or performance reduction.
- Wrap the heat insulation with tape or pipe cover in order to extend the life time of heat insulation.
- Take proper measurement to strengthen by using another heat insulation at the following installing environment.
  (a) Environment temperature ≥ 35°C and humidity 85%.
  (b) Environment temperature ≥ 25°C and humidity 90%.

Installation example

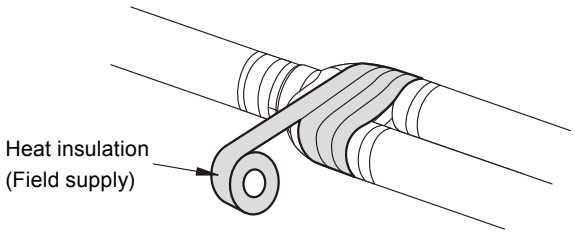

SYSTEM DESIGN

SYSTEM DESIGN

3-4. HEADER

■ HEADER INSTALLATION

● Header selection

Header	
3 - 6 Branches	3 - 8 Branches
UTR-H0906L	UTR-H0908L

When Separate into two branches, please use a separation tube instead.

● Installation

(1) When connecting the connection pipes from the indoor units, connect them to the header branch pipes in order of 1, 2, 3, etc.

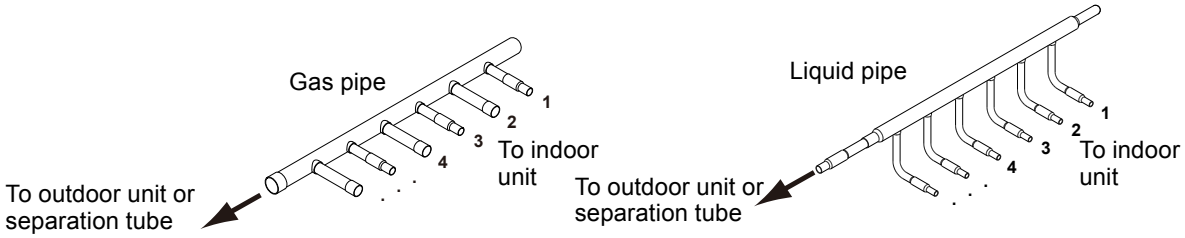

(2) Use a pipe cutter to cut at the location that matches the piping size or use expanders as necessary.

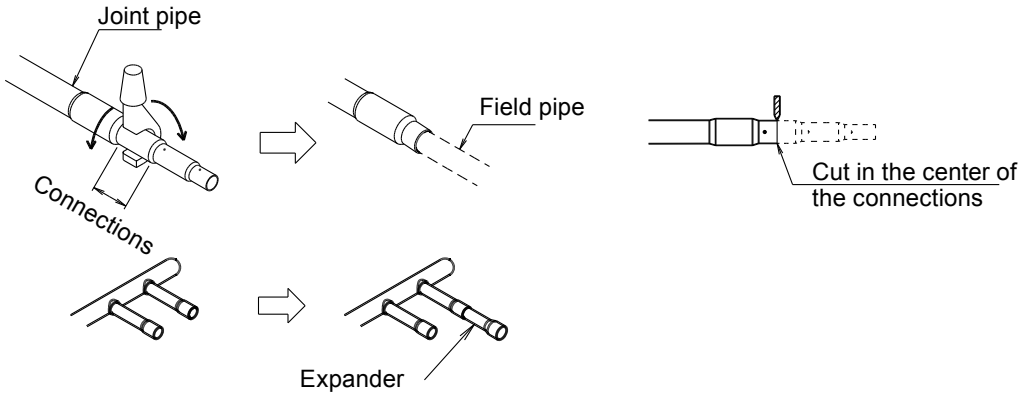

(3) Attach a plugging pipe provided if there is no piping connected at the headers.

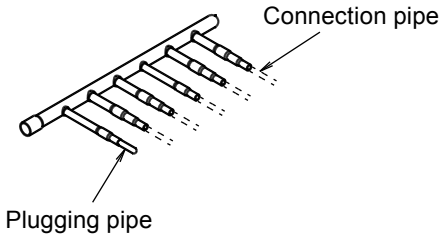

SYSTEM DESIGN

(4) Connecting pipe field supplied from outdoor unit, cut the pipe end to connect the pipe and close the opposite end.

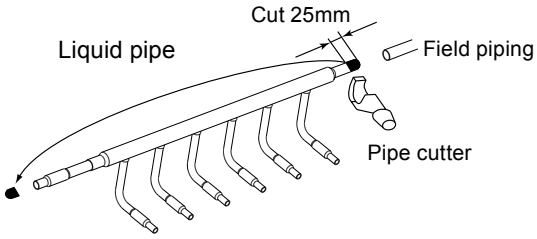

(5) Use header support as necessary.

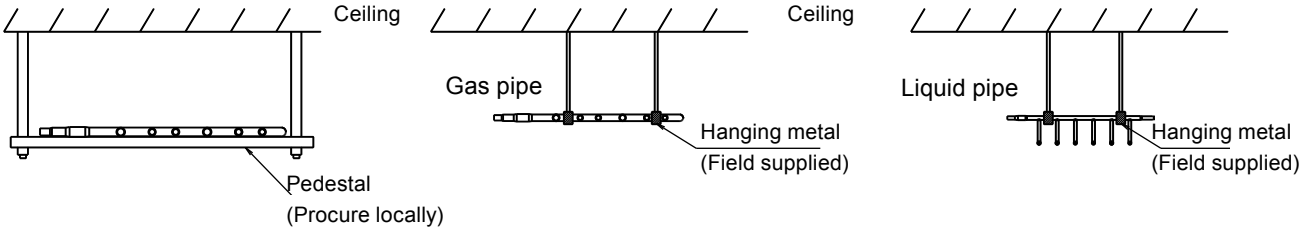

● Restriction when install

Be sure following restriction.

1) Installation angle

Install the header so that it branches horizontally.

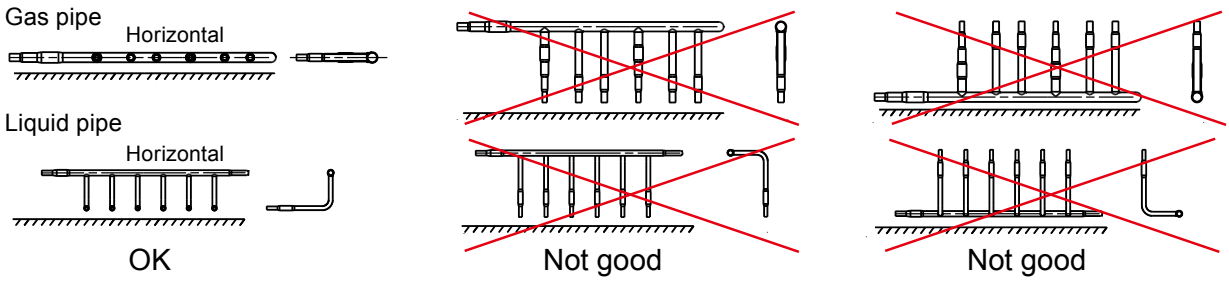

Use a level to make sure that the header is positioned as shown in following figure, and then, secure it in place.

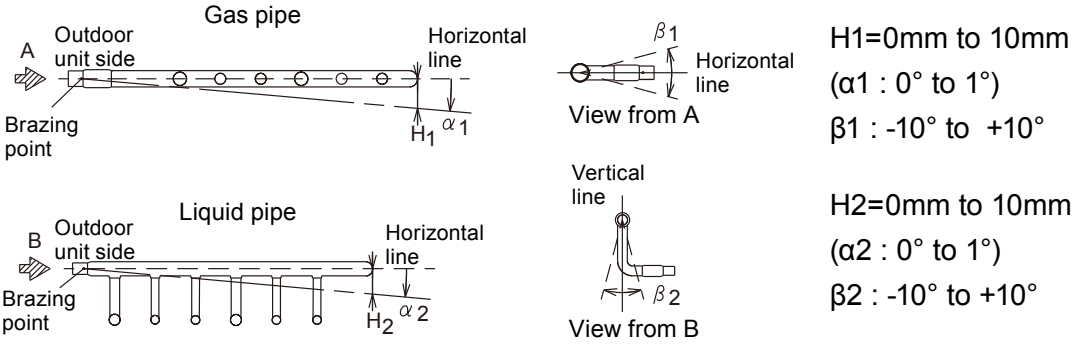

H1=0mm to 10mm
(α1 : 0° to 1°)
β1 : -10° to +10°

H2=0mm to 10mm
(α2 : 0° to 1°)
β2 : -10° to +10°

SYSTEM DESIGN

2) Straight tube length

A straight tube (minimum length 0.5m) is necessary before header in order to separate the refrigerant exactly.

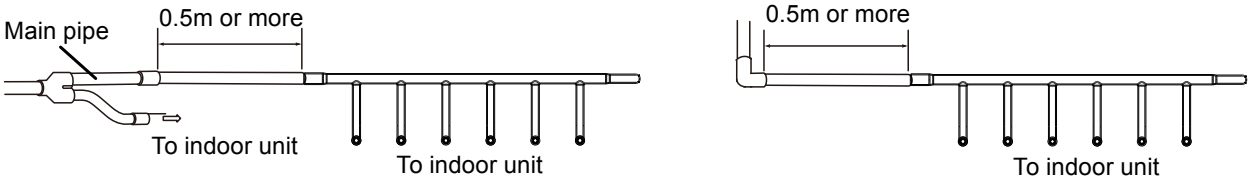

● Heat insulation installation

After brazing the piping, attach heat insulation.
Remove the protective paper for the tape on the heat insulation for the header and attach it.
Tighten by using binders at five locations.

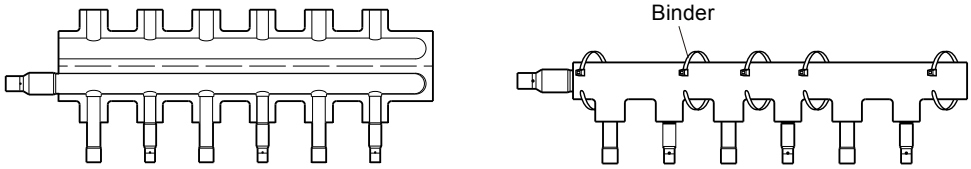

Cover the plugging pipe with heat insulation and seal with tape.



● Caution

Separation tube is not allowed to install header kit.

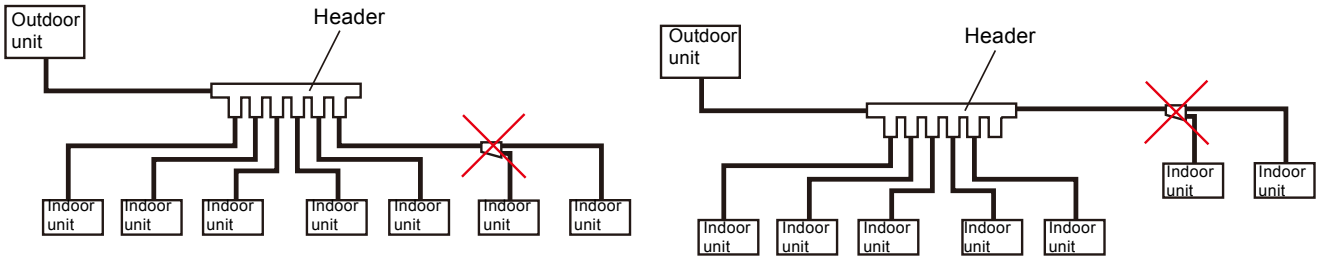

SYSTEM DESIGN

SYSTEM DESIGN

3-5. EV KIT

An EV kit must be required for the compact wall mounted type (EEV external model) on the liquid pipe side.

■ EV KIT SELECTION

Model name	Application indoor units
UTR-EV09XB	AS∗E04GACH, AS∗E07GACH, AS∗E09GACH
UTR-EV14XB	AS∗E12GACH, AS∗E14GACH

A wrong selection could cause improper operation, because the built-in electronic expansion valve is different.

■ MODELS REQUIRE EV KIT :

AS∗E04GACH, AS∗E07GACH, AS∗E09GACH, AS∗E12GACH, AS∗E14GACH

- Select the above indoor unit for use in small and, quiet rooms such as hotel or bedroom, where noise would be a distraction.
- The other indoor units, do not require an EV kit.

■ DECIDING INSTALLATION LOCATION

- Keep the installed piping and wiring length less than 5m.
- EV kit should be considered to install away from the living quarters, such as above the ceiling.
- Install the EV kit where it can be accessed for servicing.

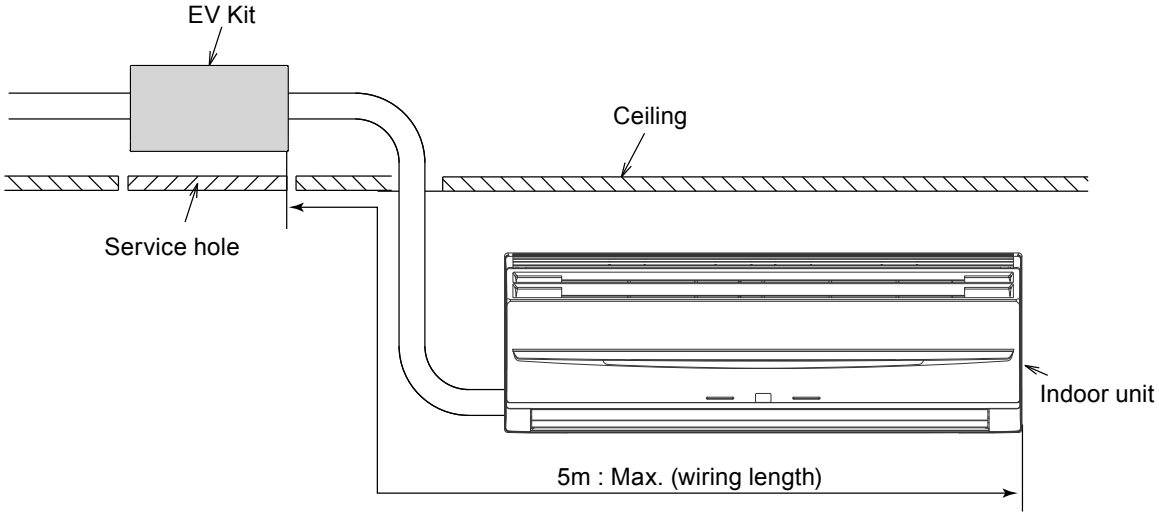

⚠CAUTION

Do not install EV kit in a location with any of the following conditions.

- Do not install the kit outdoor.
- Do not install the kit where the danger of combustible gas leakage.
- Do not install the kit where near a fire place or other heating appartatus.
- Do not install the kit where oily smoke, machine oil (i.e. factory),salty envilopment with direct sea breeze.
- Do not install the kit where too much of dust.
- Do not install the kit where corrosive gas such as sulphurous acid gas is generated.
- Do not install the kit where exposed to rains and direct sunlight.

SYSTEM DESIGN

Decide the mounting position with the customer as follows:

(1) Install EV kit level on strong wall, floor, ceiling which is not subject to vibration.

(2) Install EV kit where the connection pipe can be easily installed.

(3) Install EV kit where vibration and noise are not amplified.

(4) Take servicing, etc. into consideration and leave the space as follows.

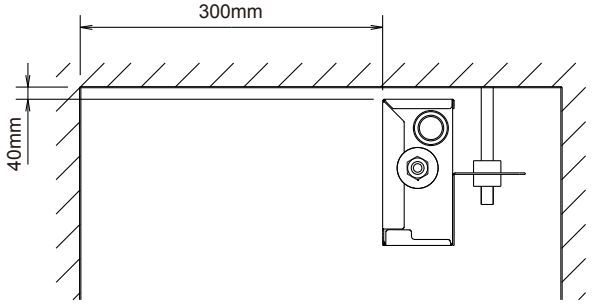

■ INSTALLATION METHOD

⚠CAUTION

The installation direction can be selected either horizontal (Pattern A) or vertical (Pattern B), but keep the inclination within 5º.

Pattern A

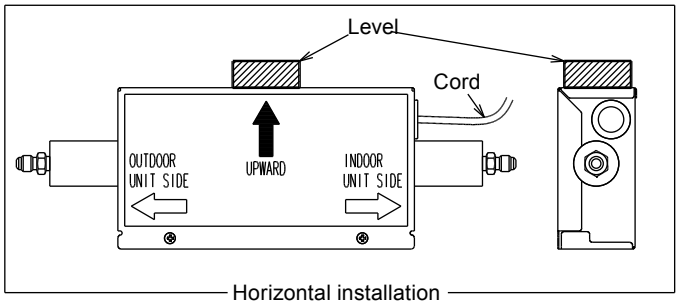

Pattern B

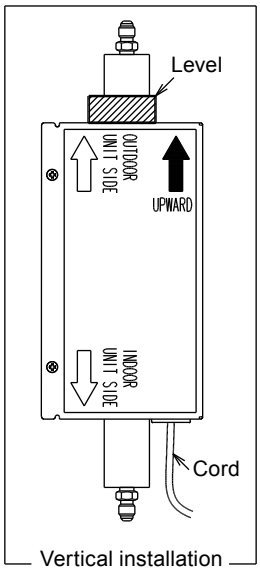

Incorrect installation direction or angle may cause improper operation.

● Suspended installation

(1) Remove the 2 screws (M4x10) and replace them with the hanger.

(2) Use the hanger bolts to fasten the hanger.

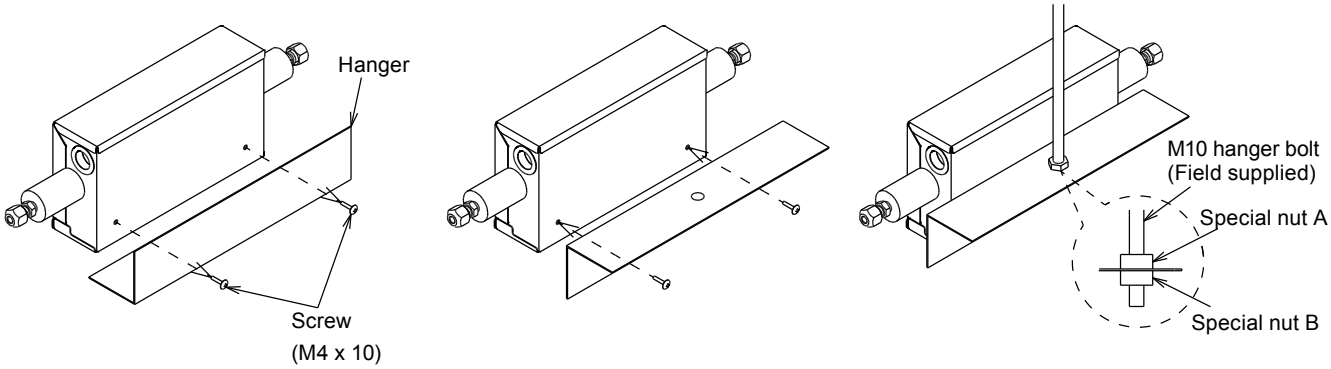

SYSTEM DESIGN

● Floor installation

Use the 4 screws to fasten the unit to the floor.

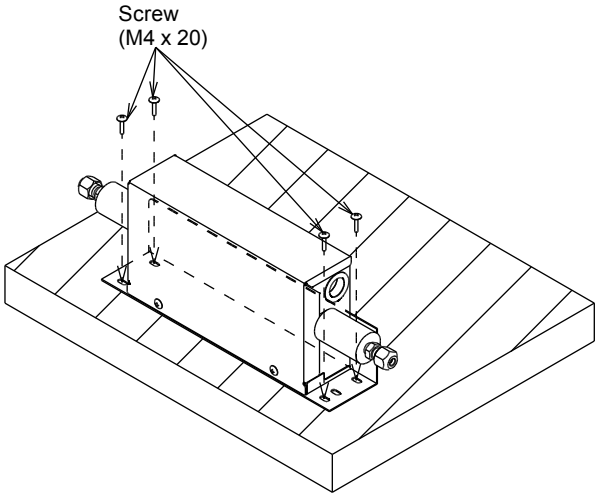

● Wall mounted installation

(1) Remove the 2 screws (M4x10) and replace them with the hanger.

(2) Use the 4 screws (M4x20) to fasten the unit to the wall.

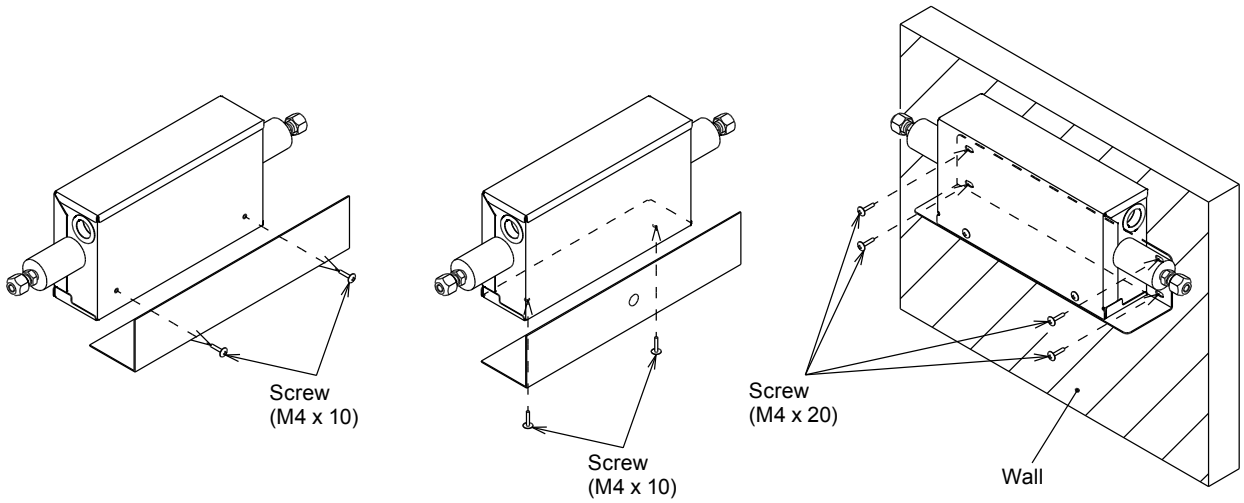

SYSTEM DESIGN

SYSTEM DESIGN

■ CONNECT THE PIPES

Connect EV kit to liquid pipe of compact wall mounted (EEV external model) indoor unit.

Pipe size	Indoor unit side	ø 6.35mm	Flare connection
	Outdoor unit side	ø 6.35mm	

Use a toruque wrench to tighten the flare nut.

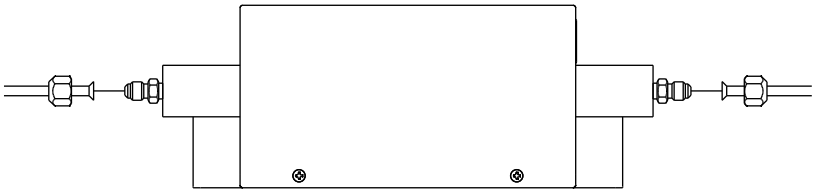

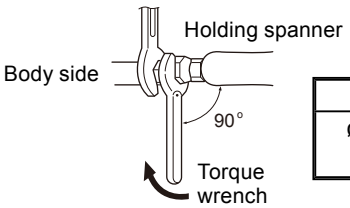

Pipe	Tightening torque
ø 6.35 (1/4")	16.0 to 18.0 N•m

■ ATTACH THE INSULATION MATERIAL

Insulate by the coupler heat insulation arround the pipe.

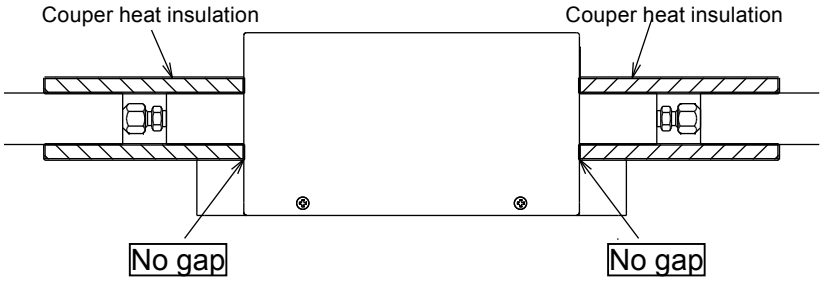

■ WIRING PROCEDURE

(1) Connect the EV kit cord to the indoor unit.

(2) Wrap the tube arround the connection, and fasten both ends binders.

(3) Connect the ground to the indoor unit.

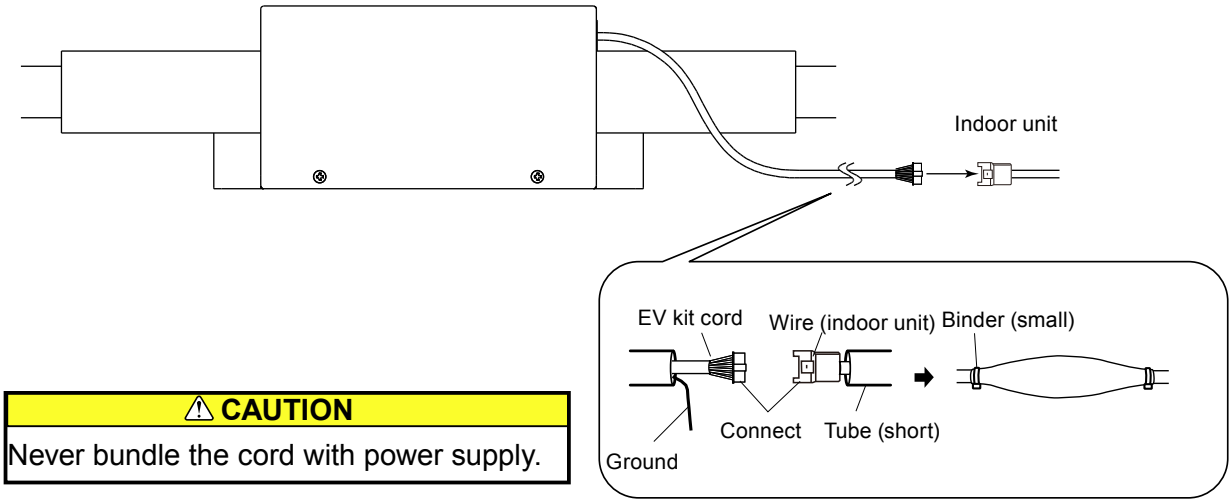

⚠ CAUTION

Never bundle the cord with power supply.

SYSTEM DESIGN

SYSTEM DESIGN

■ SPECIFICATIONS

Model name	UTR-EV09XB	UTR-EV14XB
Dimensions (mm) (H x W x D)	121 x 416 x 65	
Weight (g)	1500	
Connection cord length (m)	5	

4. WIRING DESIGN

4-1. ELECTRICAL WIRING

■ PRECAUTION FOR ELECTRICAL WIRING

Regulation on wire diameter and selecting circuit braker size differ from locality.

Install in accordance with regional standard.

⚠WARNING
● Do not turn on the power until all installation work is complete.
● Always install a circuit breaker in the power supply cable for the unit. Failure to use a circuit breaker could result in electrical shock or fire.
● Before starting work, check that power is not being supplied to the unit.
● Connect the connection cable firmly to the terminal board. Imperfect installation may cause a fire.
● Always fasten the outside covering of the connection cable with the cord clamp. (If the insulator is chafed, electric leakage may occur.)
● Always connect the ground wire.
● Never install a condenser for improving the power factor. (It will not improve the power factor and the condenser will become abnormally hot.)

SYSTEM DESIGN

■ WIRING SYSTEM OUTLINE

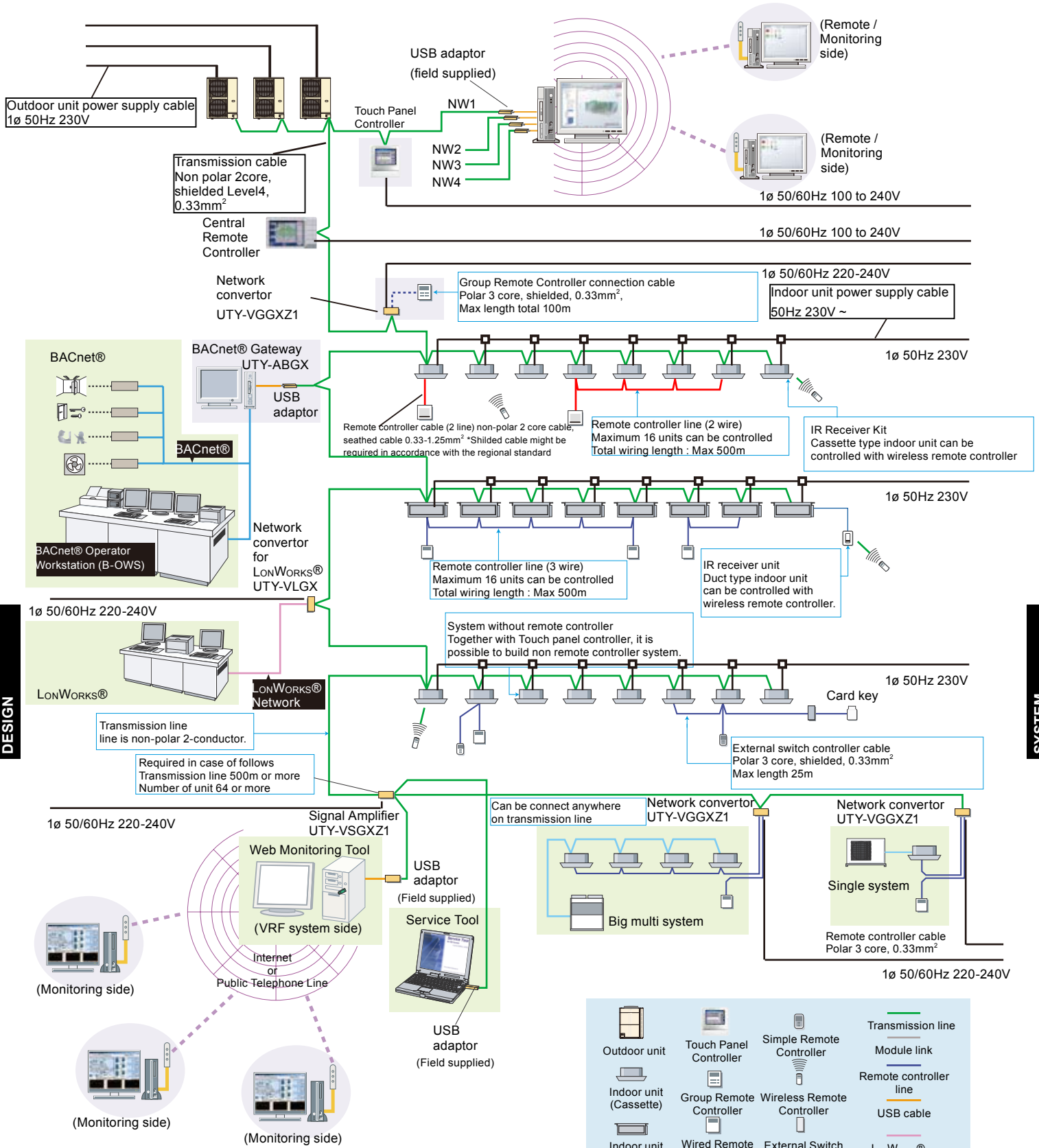

Disconnect switch might be required in accordance with the regional standard.

SYSTEM DESIGN

SYSTEM DESIGN

4-2. POWER SUPPLY CABLE WIRING

■ POWER SUPPLY CABLE SPECIFICATIONS

Use a separate power supply for the outdoor unit and indoor unit.

● Outdoor unit

Model	Recommended cable size (mm^2)		Fuse capacity (A)	Breaker for leakage current	Remarks
	Power cable	Earth cable			
AJ∗A40LALH	6	4	32	30mA 0.1sec or less	230V~ 50Hz 2Wire + ground
AJ∗A45LALH	6	4	32		
AJ∗A54LALH	6	4	32		

- Select wire size base on the value of MCA and TOCA. In the table of "3.OUTDOOR UNITS",example of wiring specification for outdoor unit is given.
- Select circuit breaker for outdoor unit based on the value of MCA of "3.OUTDOOR UNITS". The breaker should not operate when starting current is generated.

● Indoor unit

Model	Recommended cable size (mm^2)	Fuse capacity (A)	Breaker for leakage current	Remarks
All models	2.5	20	Refer to Table B	230V~ 50Hz 2Wire + ground

Refer to the table for the breaker specifications of each installation condition. Perform the power crossover wiring within the range of the same refrigerant system.When the crossover wiring is done, make a connection for indoor unit to satisfy conditions Table A and Table B below.

Table A. Current breaker requirements

Model	MCA (A)	Fuse capacity (A)
All models	*1	20

MCA : Minimum Circuit Ampacity

*1 : Refer chapter4 3.ELECTRIC CHARACTERISTICS

When the power crossover wiring is done, make it so that the total of the MCA of the connected indoor units does not exceed the 15 A.

If the capacity of connected indoor units exceeds the upper limit, either add breakers or use a breaker with a greater capacity.

Table B. Earth leakage breaker requirements

Breaker capacity	Maximum connectable indoor unit
30 mA, 0.1 sec or less	9 or less

- Select cable size base on the value of total MCA of the indoor units connected. and if necessary divided the system which the total MCA of the indoor units connected must be smaller than 15 (A). The indoor units shall be connected up whthin refrigerant system.
- In order to be influenced of a breaker stop, please divide a power supply circuit for every refrigerant system.
- Please attach at least one breaker per refrigerant system.
- Please design the power supply circuit to keep the voltage drop within 2%.

SYSTEM DESIGN

⚠Caution
● Obtain the distribution network operator's agreement about the power capacity of the power supply system, specifi cation of the cable and the harmonic current, and etc. when you connect the outdoor unit with the power supply. ● This product is intended for professional use. Be sure to use a dedicated power circuit. Never use a power supply shared by another appliance. ● Above "Wire size" and "Fuse capacity" are an example. ● Regulation of wire size and circuit breaker differs from each locality, please refer in accordance with the regional standard. ● Specific wiring requirement should be applied Type 60245 IEC66 or equivalent. ● To prevent the electrical noise malufunction and hazards from insulation failure, the unit should be connected to ground. ● A disconnect switch may be required for ease of maintenance in accordance with the regional standard for each unit. Please check the regional standard. Make the wire length between disconnect switch and unit terminal as short as possible. ● When connecting the indoor unit power supply from part of a 3-phase power source, recommend to take the power from each phase uniformly to prevent unbalance. ● All field wiring and components must be provided by a licensed electrician. ● Use copper conductors only.

SYSTEM DESIGN

■ POWER SUPPLY CABLE WIRING

● Example : Power supply cable wiring. (Using terminal board for indoor units)

⚠Caution
● Except for EMERGENCY, never turn off main as well as sub breaker of the indoor units during operation. It will cause compressor failure as well as water leakage. ● First, stop the indoor unit by operating the control unit, converter or external input device and then cut the breaker. ● Make sure to operate through the control unit, converter or external input device. ● When the breaker is designed, locate it at a place where the users cannot start and stop in the daily work. ● Regulation of wire size and circuit breaker differs from each locality, please refer in accordance with regional standard.

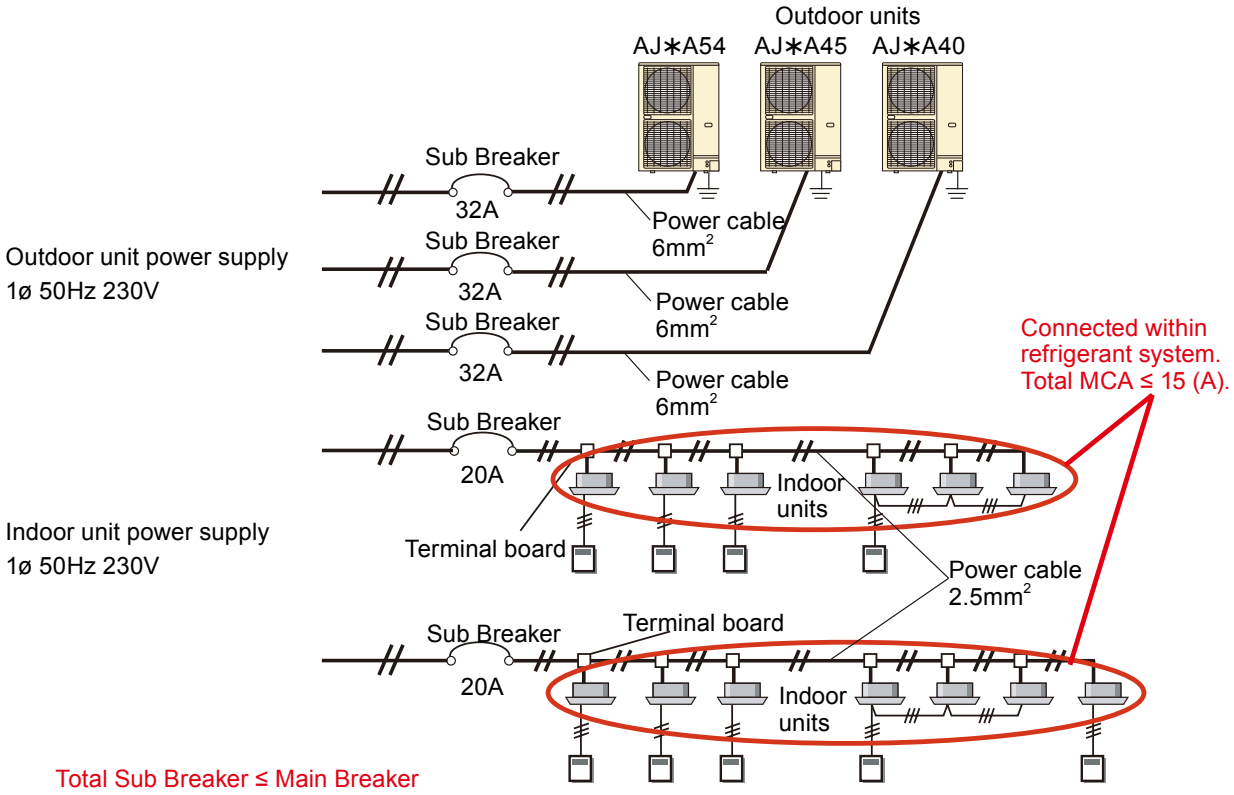

SYSTEM DESIGN

4-3. TRANSMISSION LINE

■ TRANSMISSION WIRING SPECIFICATIONS

Use	Size	Wire type	Remarks
Transmission cable	0.33mm^2 (22AWG)	LEVEL 4 (NEMA) non-polar 2core, twisted pair solid core diameter 0.65mm	LONWORKS® compatible cable

Use the shielded wire specified and always ground it both end.

22AWG (0.65mm) Level 4 cable with shielded (National Electrical Manufacturers Association (NEMA) Differs from the Category 4 specification proposed by the Electronic Industries Association / Telecommunication Industry Association (EIA/TIA)

● Reference specifications for transmission cable

No.	Item		Unit	Specifications
1	Wire type		mm	0.65dia (22AWG) Twisted pair with shield
2	Pair (Twisted pair cable) Note 1		-	1P or 2P
3	Loop DC Resistance (20°C)		Ohm/km	Less than 118
4	DC Resistance Unbalancing (20°C)		%	Less than 5
5	Dielectric Voltage (Between conductor to conductor)		V/min	AC 350
6	Insulation Resistance (20°C) (Between conductor to conductor)		Mohm-km	More than 500 (after charging DC500V 1min.)
7	Static Capacitance between Conductors	1KHz	nF/km	Less than 56
8	Unbalanced Static Capacitance (To Ground)	1KHz	nF/km	Less than 3.28
9	Characteristic Impedance	772KHz	Ohm	102+ - 15% (87 to 117)
		1MHz		100+ - 15% (85 to 115)
		4MHz		100+ - 15% (85 to 115)
		8MHz		100+ - 15% (85 to 115)
		10MHz		100+ - 15% (85 to 115)
		16MHz		100+ - 15% (85 to 115)
		20MHz		100+ - 15% (85 to 115)
10	Attenuation	772KHz	dB/km	Less than 15
		1MHz		Less than 18
		4MHz		Less than 36
		8MHz		Less than 49
		10MHz		Less than 56
		16MHz		Less than 72
		20MHz		Less than 79
11	Cross talk attenuation (Note 2)	772KHz	dB/km	Less than 58
		1MHz		Less than 56
		4MHz		Less than 47
		8MHz		Less than 42
		10MHz		Less than 41
		16MHz		Less than 38
		20MHz		Less than 36

Note :

- Number of twist is not specified. However, it shall satisfy the electrical specifications such as characteristic impedance, attenuation, etc. (Example : More than 40times/m)
- Cross talk attenuation is applied when the twisted cable has 2 pairs (2P)
- Material is not specified. However, it shall be selected by considering the operating environment (Temperature, Humidity), and the regional regulation by the environmental condition (ROHS Directive, etc.)
- Mechanical specification is not specified. However, it shall be selected by considering the operating environment.
- Never bundle transmission cable with power supply cable.

SYSTEM DESIGN

■ WIRING RULES

- In the following cases, Signal Amplifier is required.

1) When the total length of the transmission line exceeded 500 m.
   AB+BC+BD+DE+EF > 500 m (Fig. 1)

2) When the total number of units *1 is over 64.

- Transmission line length between each unit*1 : MAX 400 m.
- Total transmission line length: MAX 3600 m

AB+BC+BD+DE+EF+EG+GH < 3600 m (Fig. 2)

Fig. 1

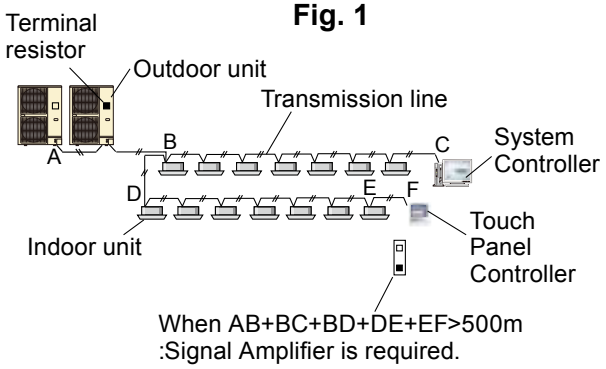

Fig. 2

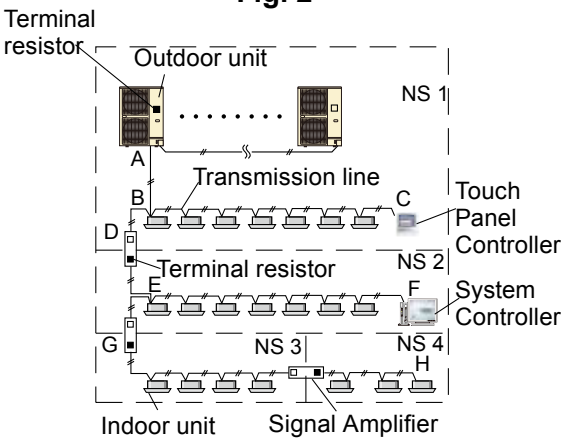

*1: Refer detail Meaning of unit on 1-2 VRF NETWORK SYSTEM.

SYSTEM DESIGN

■ TRANSMISSION WIRING FLOW

● Step 1 : Decide to use feature of Automatic Address Setting depending on system design

Decide to use Automatic Address Setting or Manual Address Setting.

- Automatic Address Setting → Step 2 (1)
- Manual Address Setting → Step 2 (2)

● Step 2 : Confirm Transmission Wiring

(1) Automatic Address Setting

Connect the transmission cable like as Fig 3-1, 3-2.

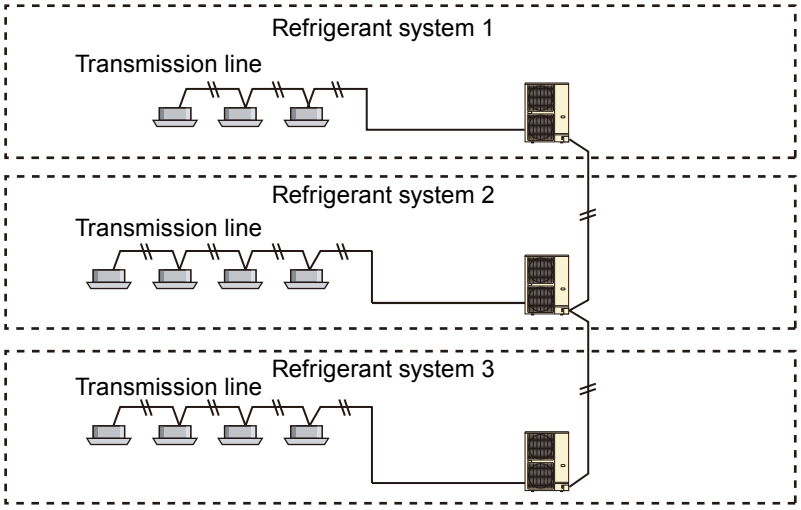

Fig. 3-1

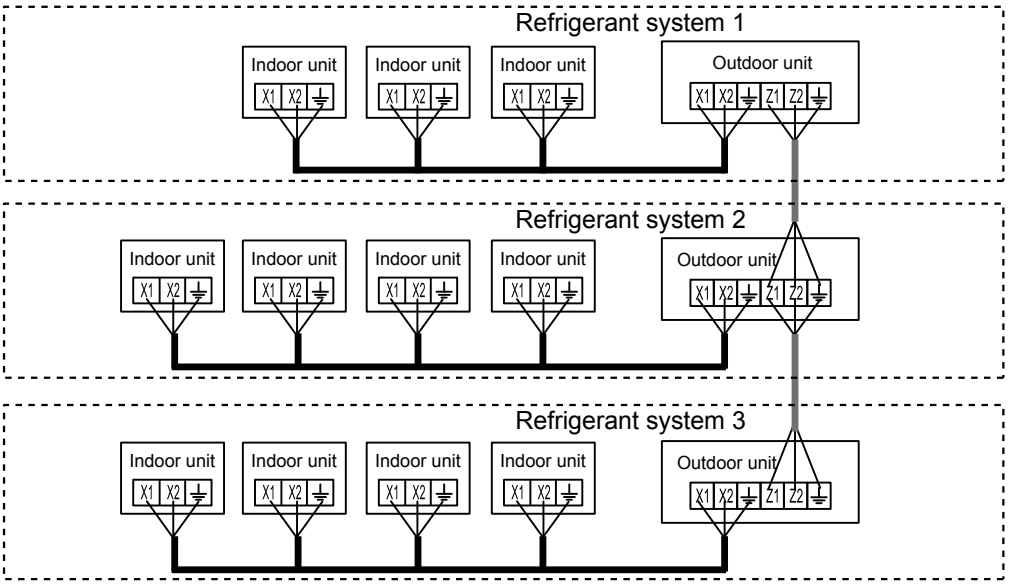

Fig. 3-2

- X1, X2 : Indoor units to outdoor unit
- Z1, Z2 : Connection for different refrigerant circuit of outdoor unit

SYSTEM DESIGN

(2) Manual Address Setting

Connect the transmission cable like as Fig 4-1, 4-2.

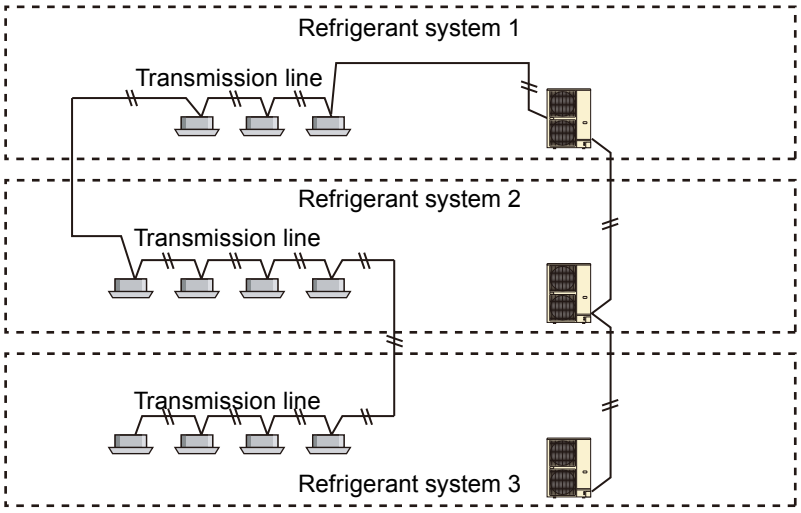

Fig. 4-1

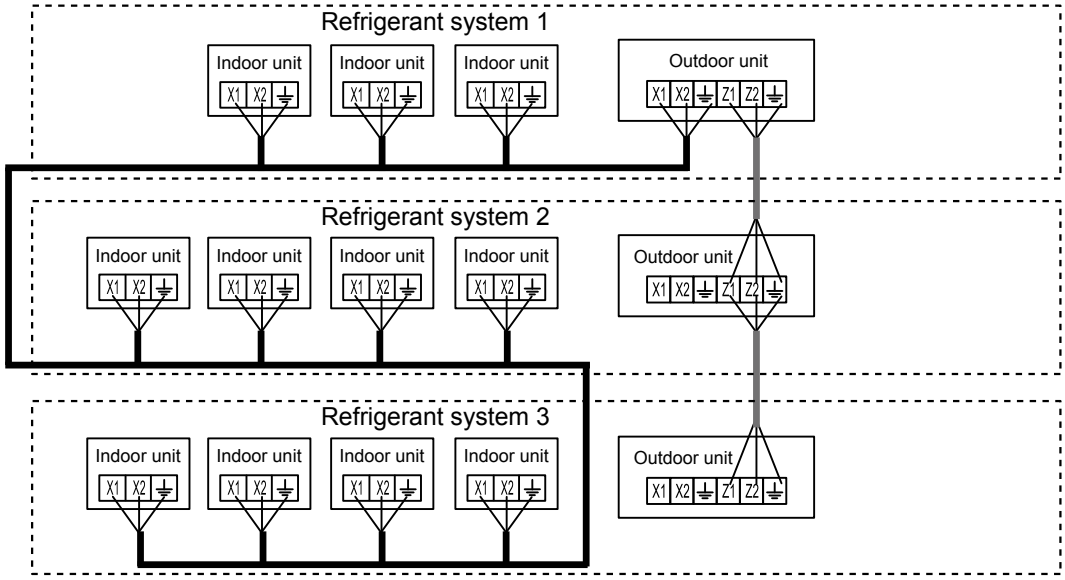

Fig. 4-2

- X1, X2 : Indoor units to outdoor unit
- Z1, Z2 : Connection for different refrigerant circuit of outdoor unit

● Step 3 : Check Transmission wiring rule

Confirm transmission wiring rule above.

SYSTEM DESIGN

● Step 4 : Confirm how to install Signal Amplifier

When Signal Amplifier is installed, network is divided into two network segments.

In a network segment (NS) divided by a Signal Amplifier, it has to keep the following facts.

1)Total transmission line length: MAX 500 m

AB+BC+BD < 500 m (Fig. 2)

2)The total number of units *1 : MAX 64

3)The number of terminal resistor : 1

*1: Refer detail Meaning of unit on 1-2 VRF NETWORK SYSTEM.

Fig. 1

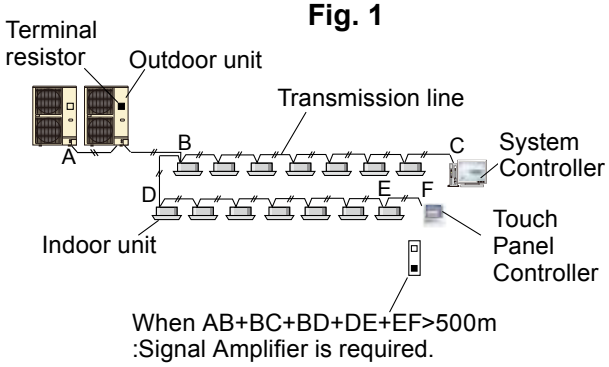

Fig. 2

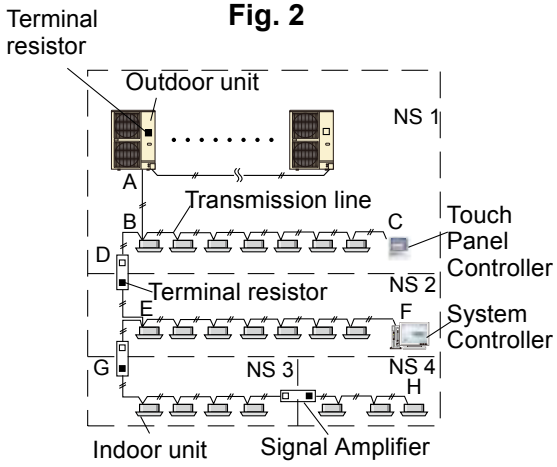

● Step 5 : Confirm how to wire transmission line

Confirm how to connect transmission line between indoor units.

- Arrange so that there is one terminal resistor for each network segment.
- Always take a ground from both ends of transmission line.

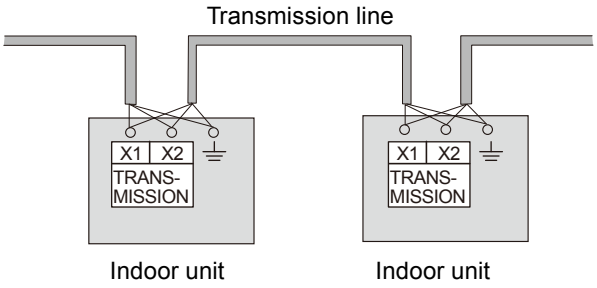

● Step 6 : Confirm transmission wiring system

Check your transmission wiring system if the transmission wiring system is ensured wiring rule.

Check list

□ Total Transmission wiring length

□ Total number of unit *1

*1: Refer detail Meaning of unit on 1-2 VRF NETWORK SYSTEM.

SYSTEM DESIGN

■ TRANSMISSION LINE SEPARATION RULES

- The transmission line between indoor unit, outdoor unit and controllers can be connected by one cable.
- Terminal board available on the market or the ones inside the indoor unit or outdoor should be used for transmission line separation.
- Connection of three or more lines may cause poor communication for one terminal. In this case, please use a terminal box.

Note

- Do not loop.

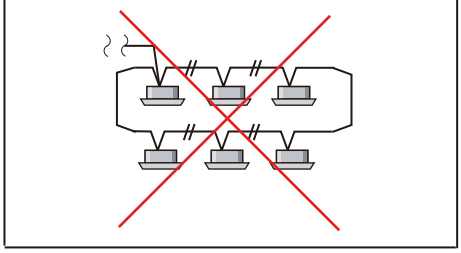

Example 1 : Connecting each outdoor and indoor unit with one connection wiring.

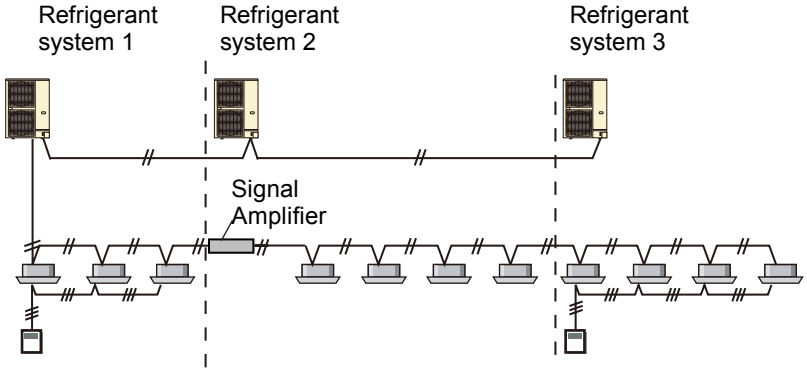

Example 2 : Separating transmission line.

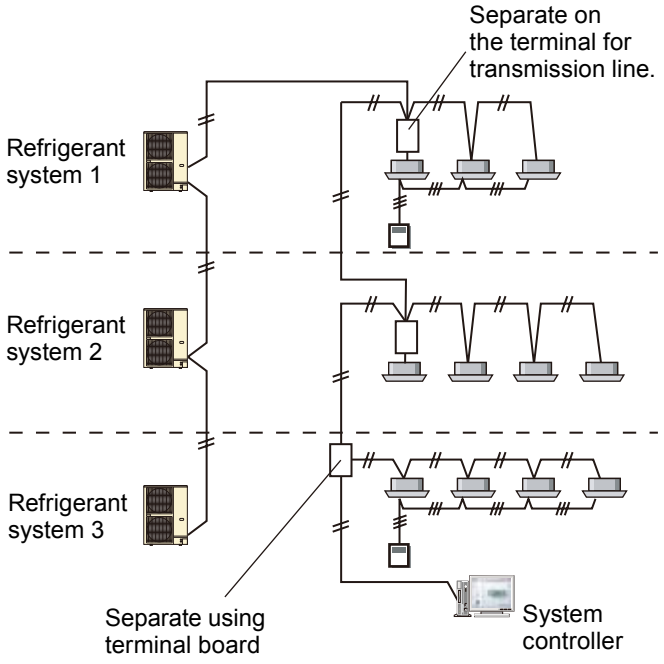

SYSTEM DESIGN

Example 3 : Separation wiring from one terminal board radially.

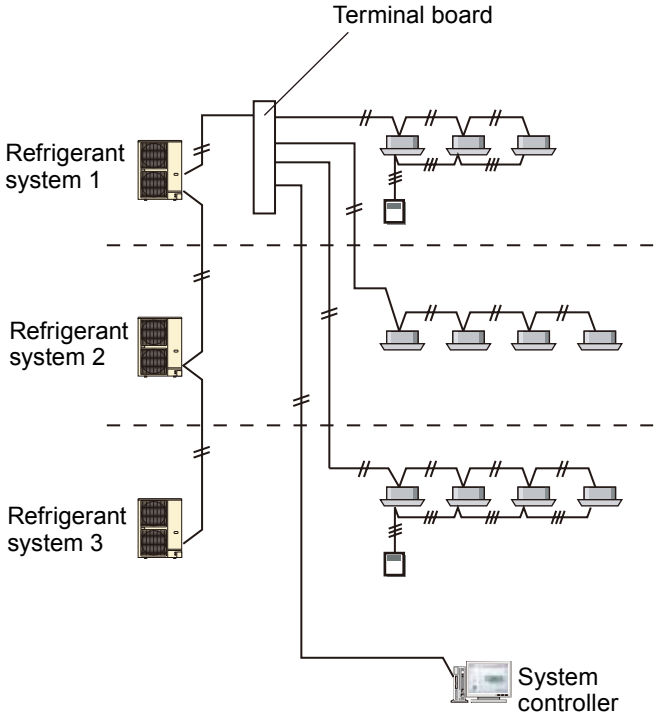

Example 4 : Combination of example 2 and 3

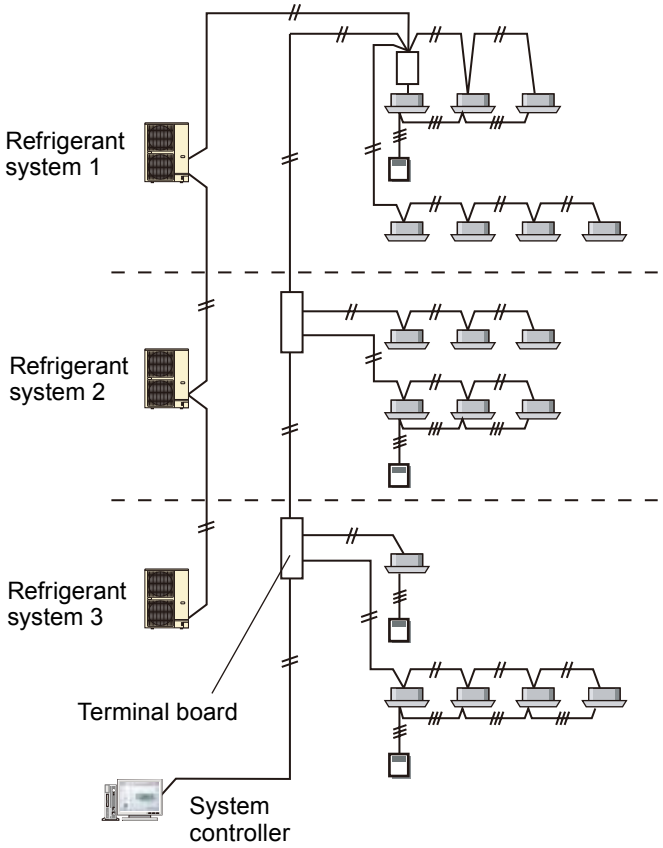

SYSTEM DESIGN

■ WIRING METHOD

Practical transmission wiring method is shown below.

Each terminal has to be connected the following rules.

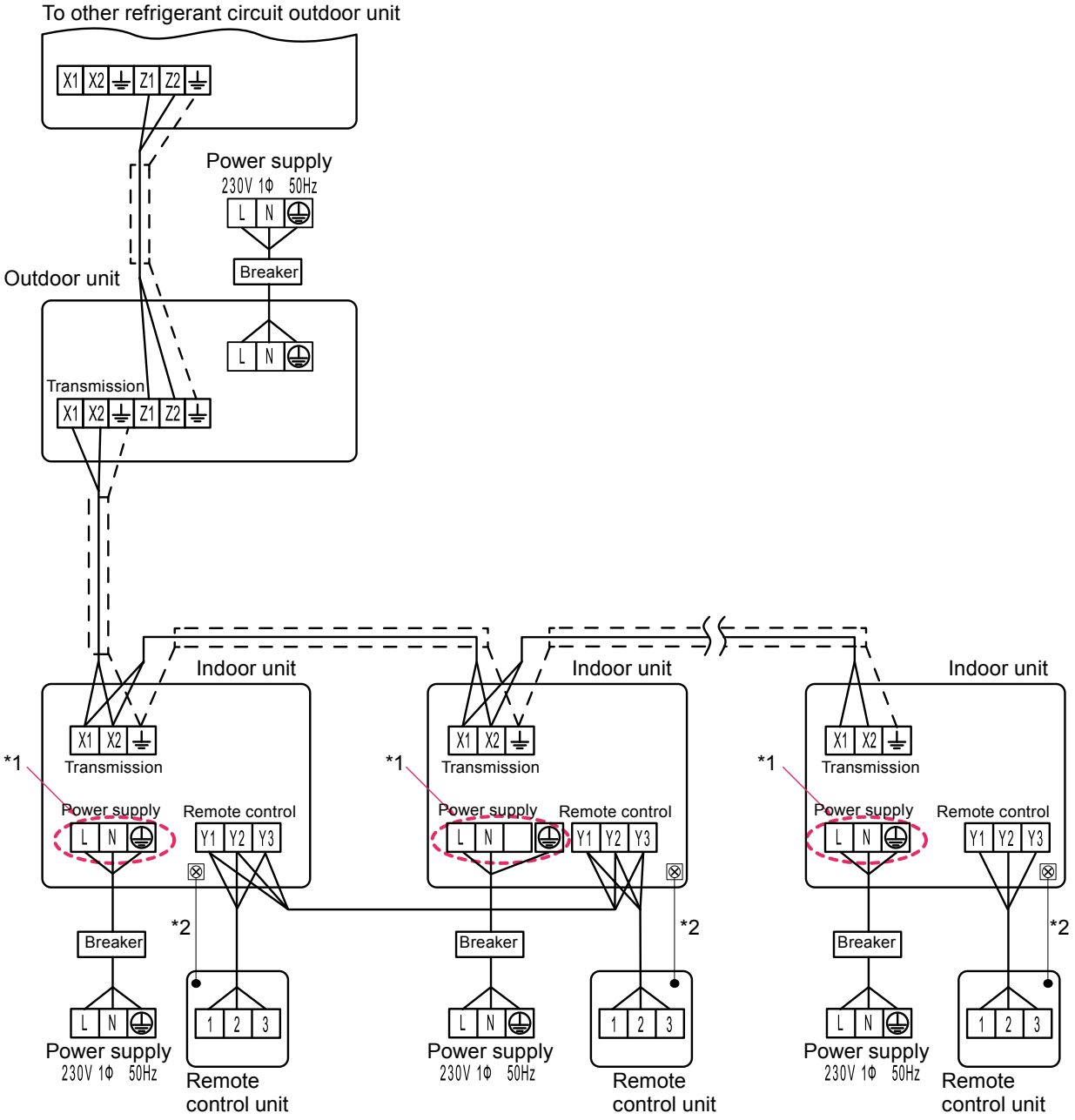

- X1, X2 : Indoor units to outdoor unit
- Z1, Z2 : Connection for different refrigerant circuit of outdoor unit

*1 : The number of power supply terminals is different depending on the indoor unit model. For the wiring, refer to the indoor unit installation manual.

*2 : Ground the remote controller if it has a ground wire.

● Example

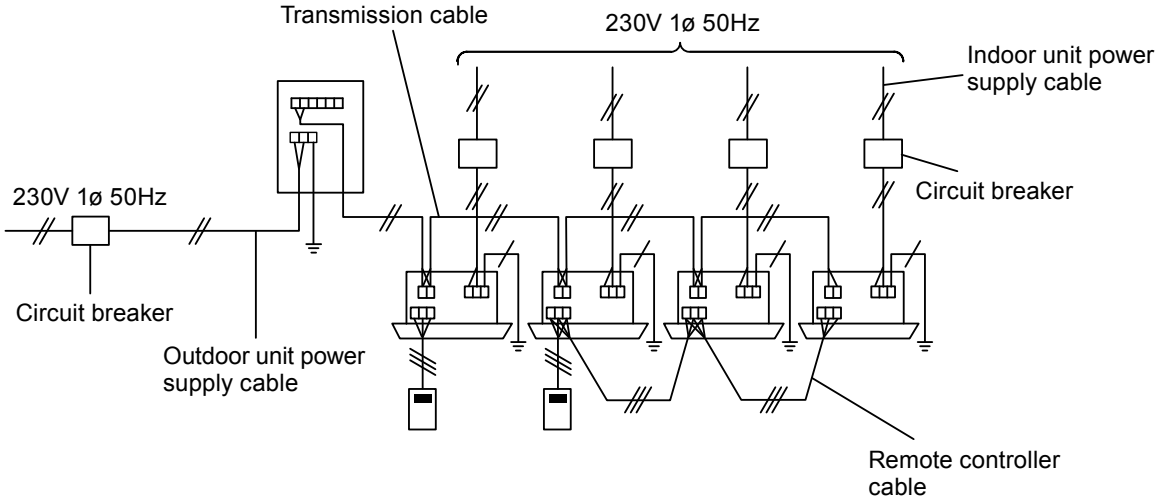

SYSTEM DESIGN

4-4. CONTROLLER CABLE WIRING

■ WIRING SPECIFICATIONS

Model type	Connection to	Wire	Size	Specification
System Controller	USB Adaptor	USB cable	-	
Touch Panel Controller	Transmission line			Refer to 4-3
Central Remote Controller	Transmission line			Refer to 4-3
Group Remote Controller	Network Convertor	Remote controller cable	0.33mm^2	Shielded, Polar 3core
Wired Remote Controller (UTY-RNR*) *2	Indoor unit	Remote controller cable	0.33mm^2 to 1.25mm^2	Sheathed, Non-polar 2core, Twisted pair *1
Wired Remote Controller (UTY-RNK*)	Indoor unit		0.33mm^2	Sheathed PVC cable Polar 3core *1
Simple Remote Controller	Indoor unit			
External Switch Controller	Indoor unit	Remote controller cable	0.33mm^2	Shielded, Polar 3core
	External input		0.33mm^2	Shielded, Polar 2core, Twisted pair
IR Receiver Unit (UTB-*WC)	Indoor unit	Connection cable	-	(5m cable attached)
IR Receiver Unit (UTY-LRHYB1)	Indoor unit	Connection cable	-	
Remote Sensor	Indoor unit	Connection cable	-	(10m cable attached)
EV Kit	Indoor unit	Connection cable	-	(5m cable attached)
Drain Pump Unit	Indoor unit	Connection cable	-	

*1 : Use shielded cable (field supplied) in accordance with the regional cable standard.

*2 : Refer to next page

⚠Caution

- Install in accordance with the regional standard.
- Never bundle the power supply cable and controller cable together. Bundling these cords together will cause misoperation.
- Always ground for shilded cable both end.
- For detail specification and connection, please refer to "Chapter 5 CONTROL SYSTEM".
- Controller might be required to connect power supply cable and transmission line. Use separate connection with other units for power suply cable.

SYSTEM DESIGN

■ WIRED REMOTE CONTROLLER (Touch panel) WIRING SPECIFICATION

Note: UTY-RNR* only

Maximum connectable number of remote controllers by cable size and the length.

Cable size		Max.connectable number of remote controllers		
AWG	mm^2	*L ≤ 100 m	100 m < *L ≤ 250 m	250 m < *L ≤ 500 m
16	1.25 (2 > *S ≥ 1.25)	4	4	4
18	0.75 (1.25 > *S ≥ 0.75)	4	4	2
20	0.5 (0.75 > *S ≥ 0.5)	4	2	2
22	0.3 (0.5 > *S ≥ 0.3)	4	1	1

*L: Total cable length, *S: Cable size

SYSTEM DESIGN

5. DRAIN CONNECTION

5-1. OUTDOOR UNIT

⚠CAUTION
Perform drain work in accordance with this Manual, and ensure that the drain water is properly drained. If the drain work is not carried out correctly, water may drip down from the unit, wetting the furniture.
When the outdoor temperature is 0 °C or less, do not use the accessory drain pipe and drain cap. If the drain pipe and drain cap are used, the drain water in the pipe may freeze in extremely cold weather.

- As the drain water flows out of the outdoor unit during heating operation, install the drain pipe and connect it to a commercial 16 mm hose.
- When installing the drain pipe, plug all the holes other than the drain pipe mounting hole in the bottom of the outdoor unit with drain cap so there is no water leakage.

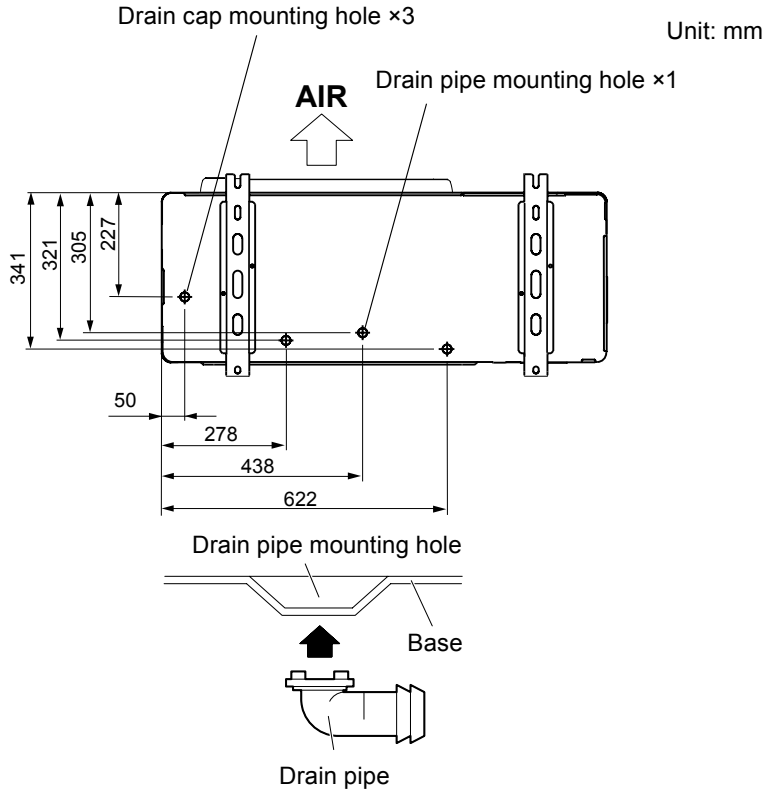

SYSTEM DESIGN

5-2. INDOOR UNIT

■ GENERAL RULES OF DRAIN PROCESS

- Install the drain pipe with downward gradient (1/100 or more) and so there are no rises in the pipe.
- Use general hard polyvinyl chloride pipe (VP25) and connect it with adhesive (polyvinyl chloride) so that there is no leakage.
- Support the drain pipe with supporters each 1.5 to 2m.
- Do not perfrom air bleeding.
- Always heat insulate the indoor side of the drain pipe.
- When connecting the drain hose to the indoor unit, use the accessory band. (Except compact wall mounted type and wall mounted type)

■ COMPACT CASSETTE TYPE

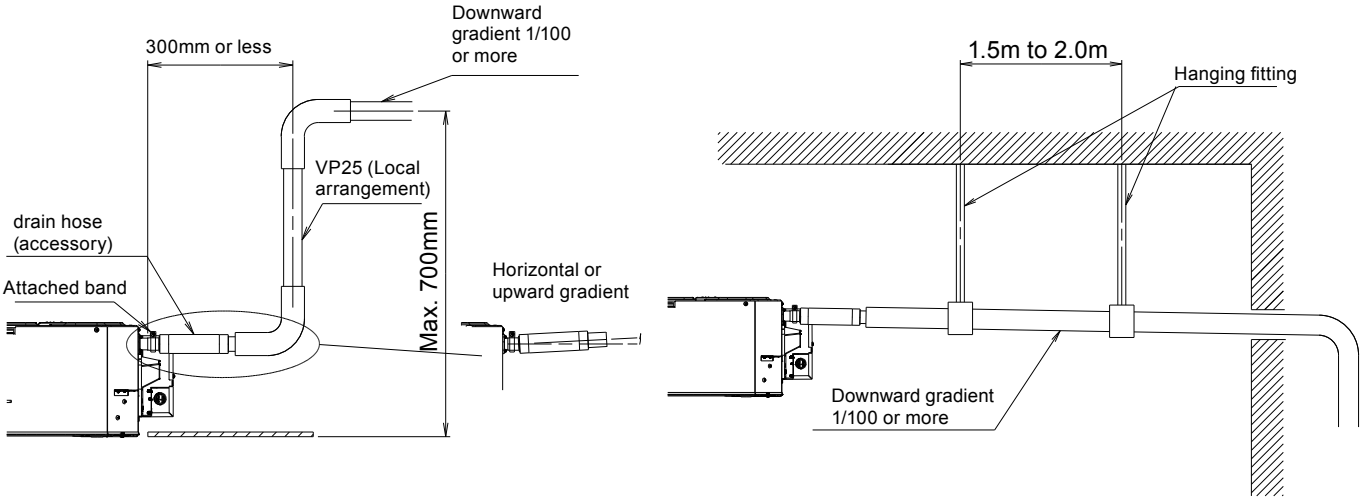

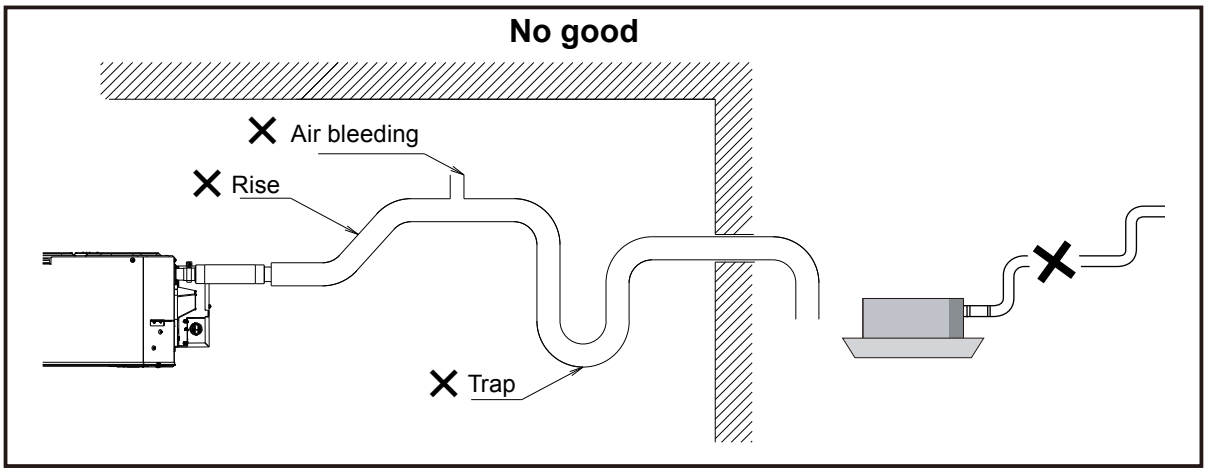

- Drain lift-up pipe restrictions:

(1) Lift-up height ≤ 700mm (from ceiling)

(2) Drain hose (pipe) length ≤ 300mm (between indoor unit and lift-up pipe)

- When a dimensions exceed the above restrictions will cause water leakage.

SYSTEM DESIGN

■ CASSETTE TYPE

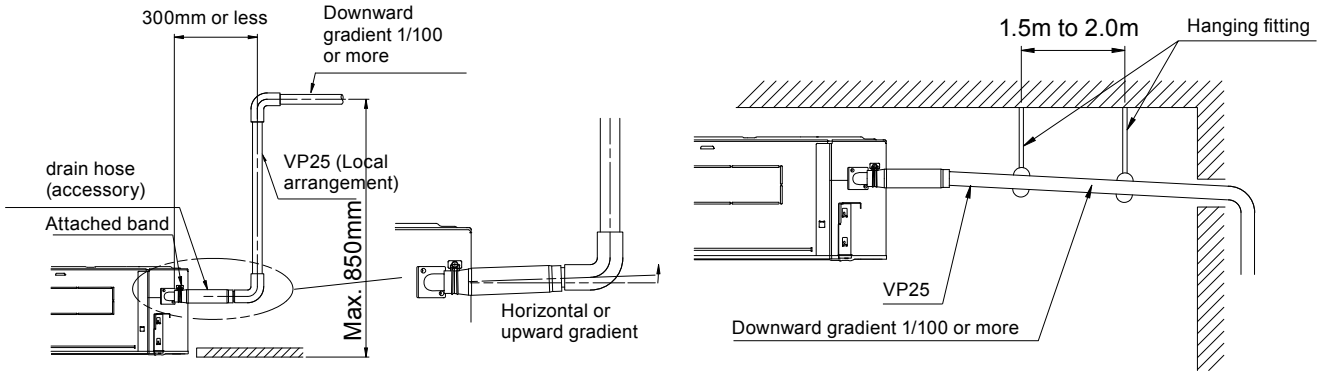

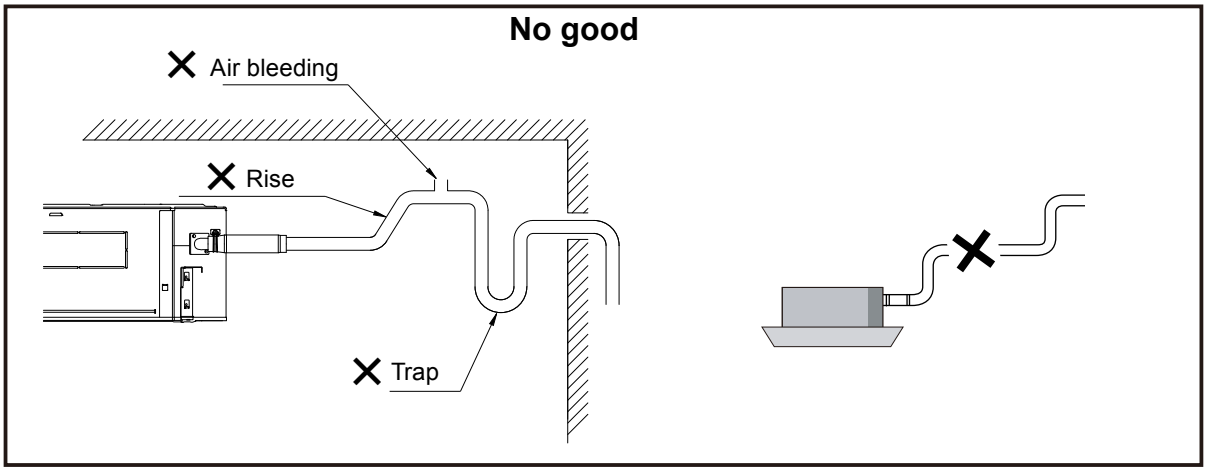

- Drain lift-up pipe restrictions:

(1) Lift-up height ≤ 850mm (from ceiling)

(2) Drain hose (pipe) length ≤ 300mm (between indoor unit and lift-up pipe)

- When a dimensions exceed the above restrictions will cause water leakage.

SYSTEM DESIGN

■ LOW STATIC PRESSURE DUCT / CONCEALED FLOOR TYPE

● Ceiling concealed setting

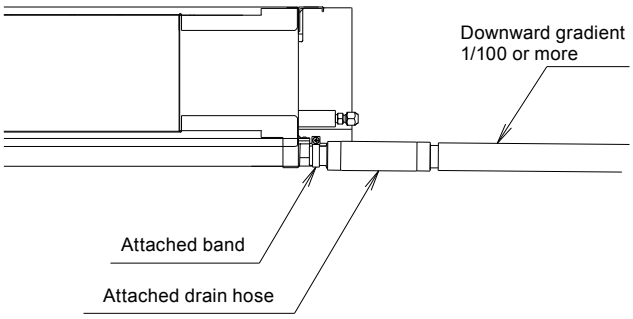

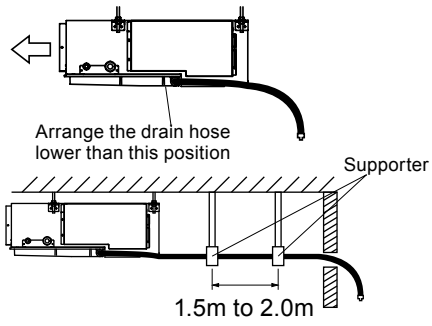

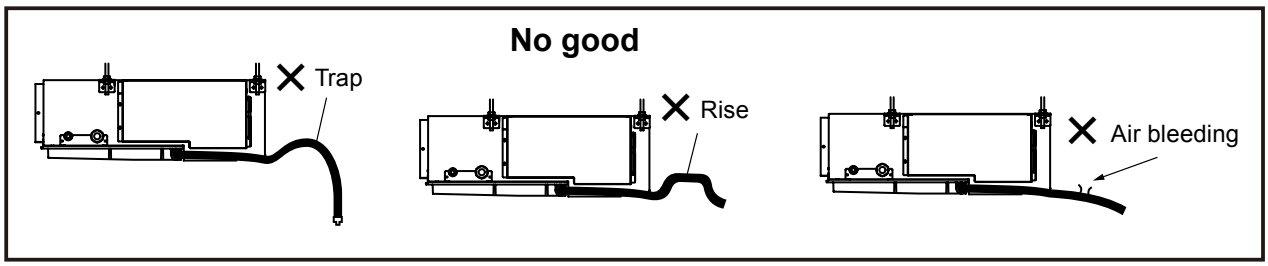

● Floor standing concealed setting

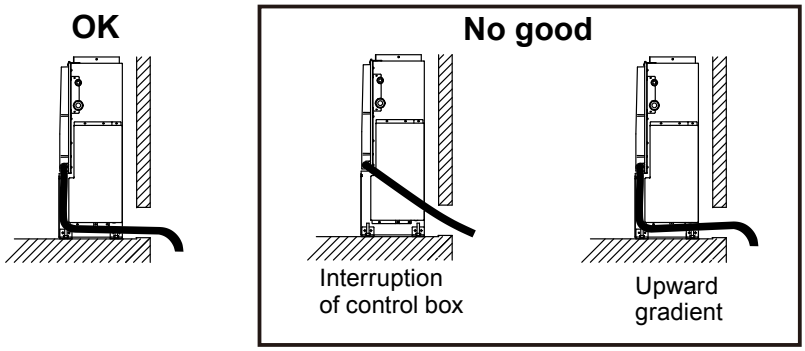

⚠ CAUTION

- Connect the drain hose so that the control box cover can easily be removed for servicing when necessary.
- In order to prevent water from leaking into the control box, make sure that the piping is well insulated.
- After finishing the piping, the drain hose installation and the wiring, seal the holes in the wall.

SYSTEM DESIGN

SYSTEM DESIGN

■ SLIM DUCT / SLIM CONCEALED FLOOR TYPE

● Ceiling concealed setting

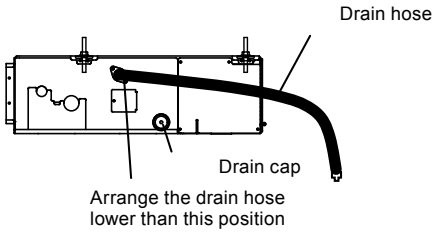

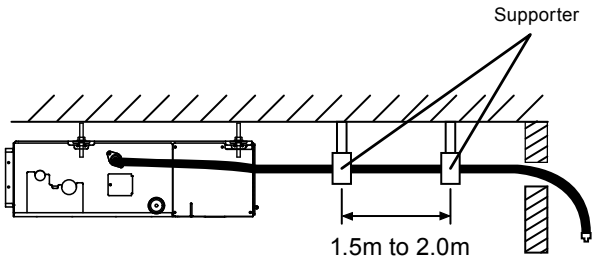

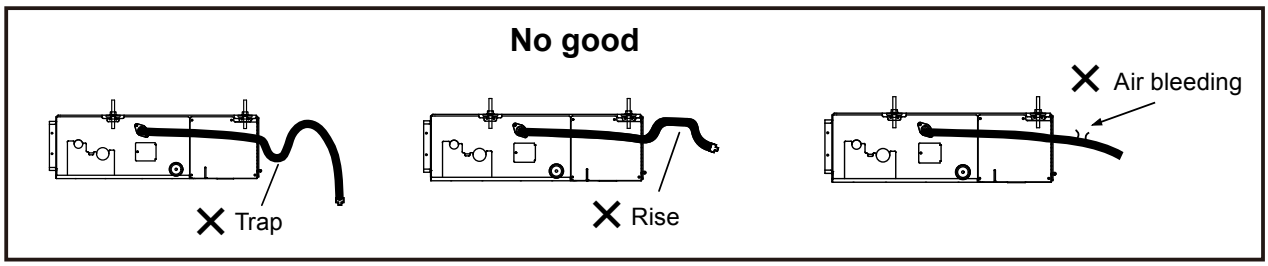

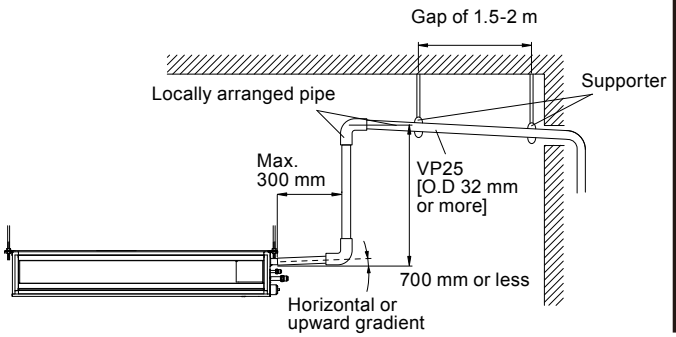

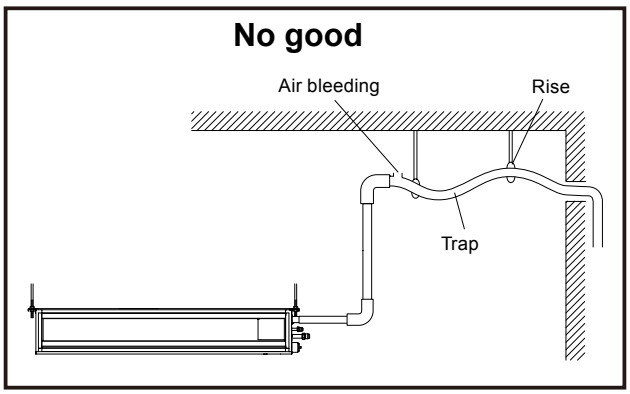

● Floor standing concealed setting

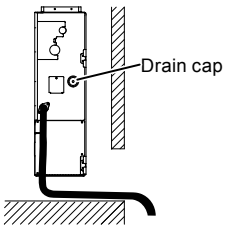

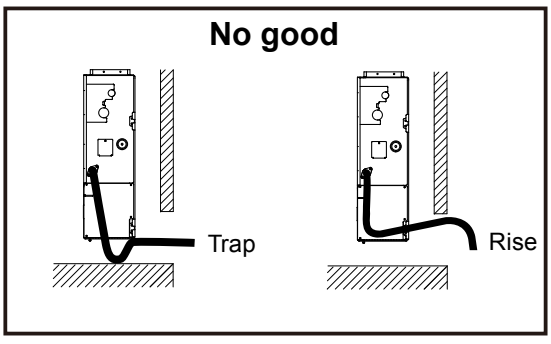

- Install the drain pipe with downward gradient (1/50 to1/100) and so there are no rises or traps in the pipe.
- Use general hard polyvinyl chloride pipe (VP25) [outside diameter 32 mm] and connect it with adhesive (polyvinyl chloride) so that there is no leakage.
- When the pipe is long. Install supporters.
- Do not perform air bleeding.
- Always heat insulate the indoor side of the drain pipe.

SYSTEM DESIGN

SYSTEM DESIGN

■ MEDIUM STATIC PRESSURE DUCT TYPE

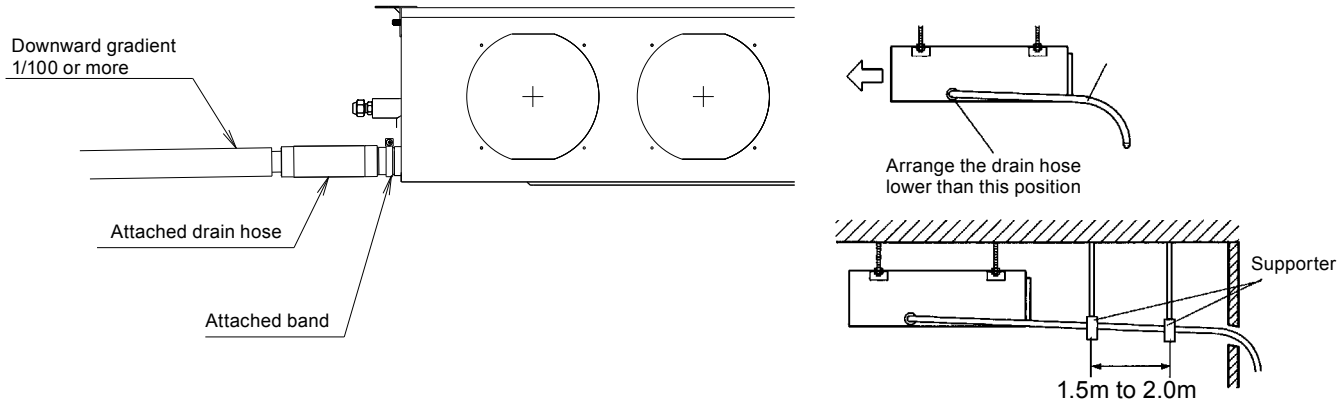

No good

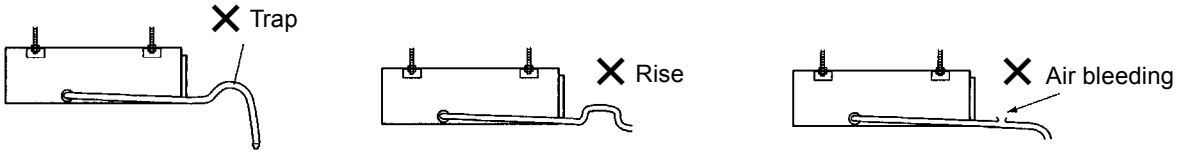

There is a drain port on the left and right sides. Select the drain port to match the local conditions.

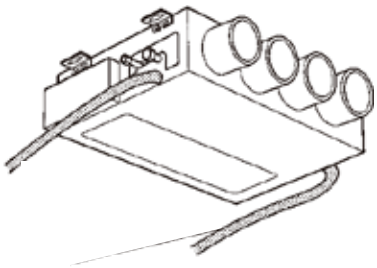

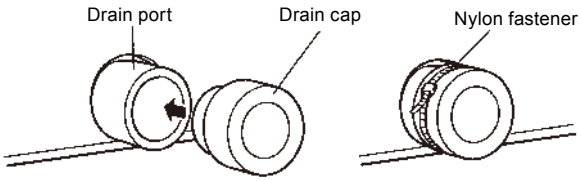

⚠ CAUTION

- Always check that the drain cap is installed to the unused drain port and is fastened with the nylon fastener.
- If the drain cap is not installed, or is not sufficiently fastened by the nylon fastener, water may drip during the cooling operation.

SYSTEM DESIGN

■ HIGH STATIC PRESSURE DUCT TYPE

● Main drain pipe

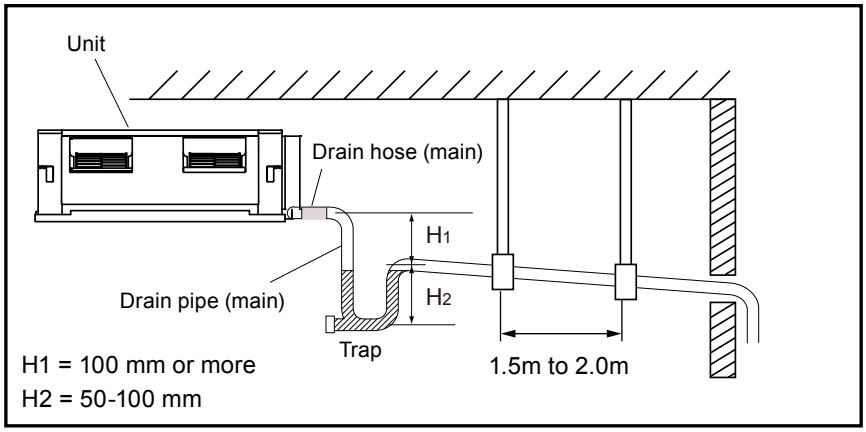

- Be sure to provide a drain trap for each indoor units.
- A trap will have no effect if positioned after the flows from multiple indoor units have joined together.
- The position of the installed drain hose should have a downward gradient of (1/100 or more).
- Make sure that the drain hose is installed without rises.
- Make the trap near to the indoor unit, Position the trap in a location where it can be cleaned.

● Safety drain pipe

There is no need to provide a trap for the safety drain pipe. If the safety drain pipe is connected to the main drain pipe, make the connection below the trap on the main drain pipe.

Once installation is complete, check the flow of the drain water.

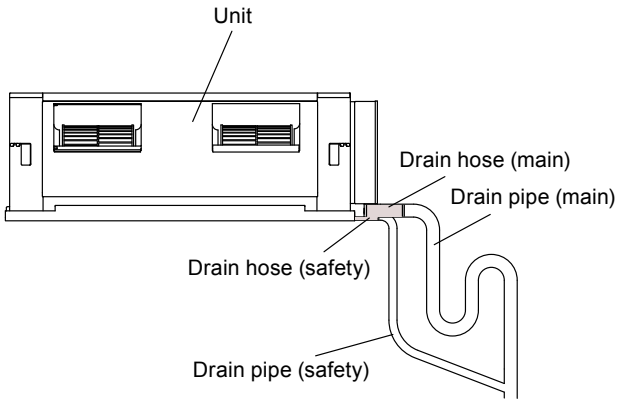

SYSTEM DESIGN

SYSTEM DESIGN

■ FLOOR / CEILING TYPE

● Under ceiling setting

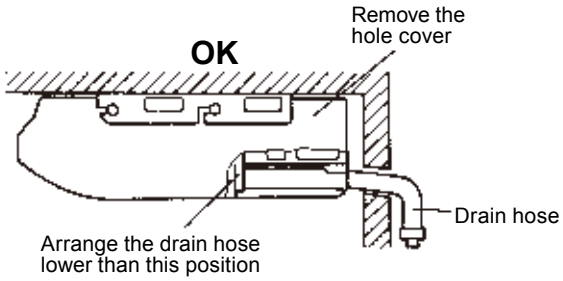

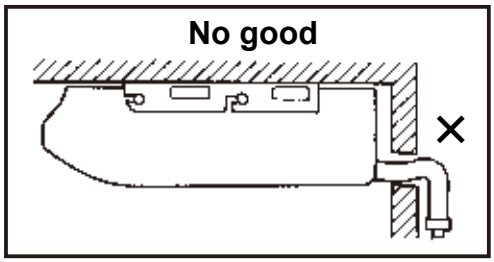

When drain hose is arranged backward.

Secure the drain hose with the VT wire.

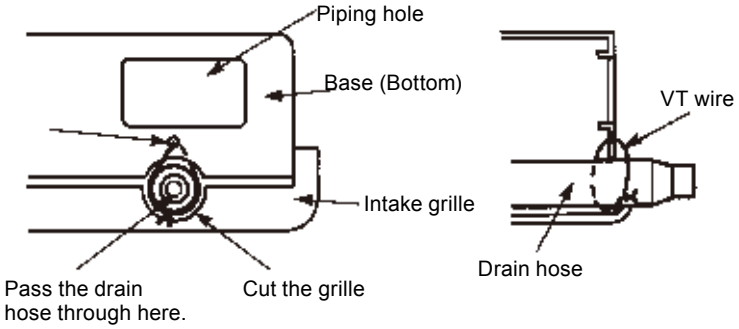

● Floor console setting

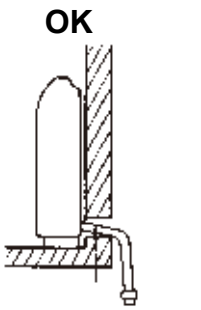

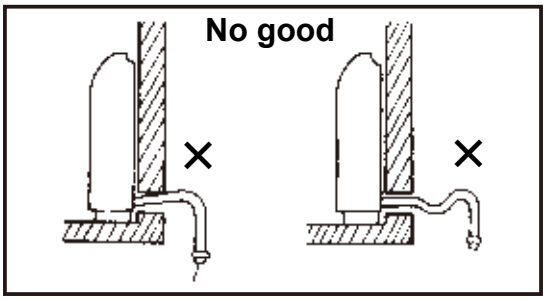

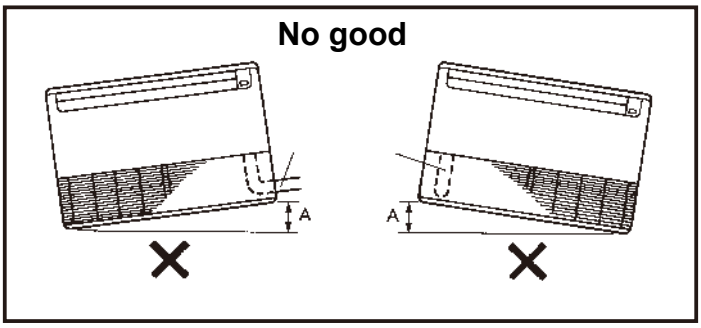

- Do not install the unit so that the drain hose side is too high.
- Height A should be less than 5mm.

SYSTEM DESIGN

■ CEILING TYPE

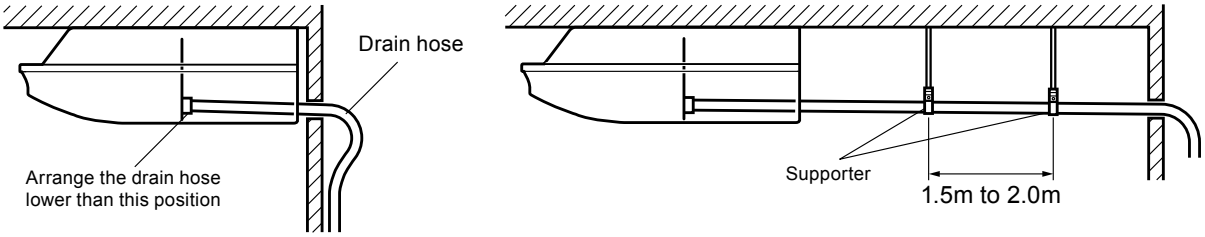

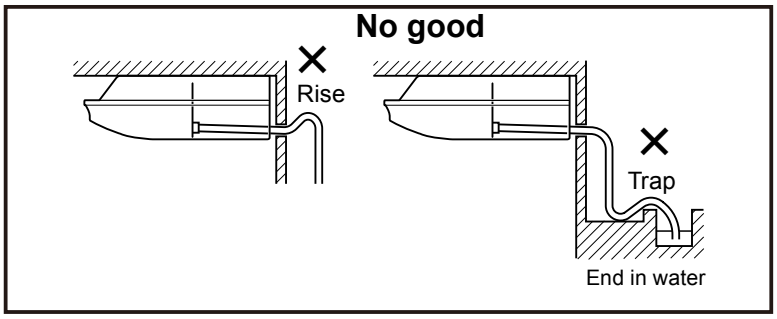

Fasten the drain pipe with VT wire so that the pipe slopes correctly within the indoor unit .

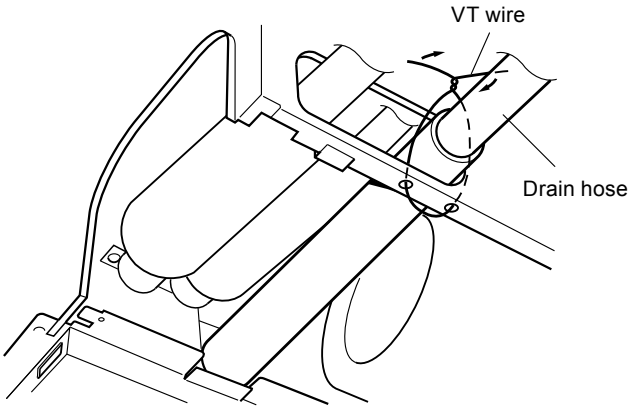

Indoor unit (rear view)

SYSTEM DESIGN

■ WALL MOUNTED TYPE (04-14 Models)

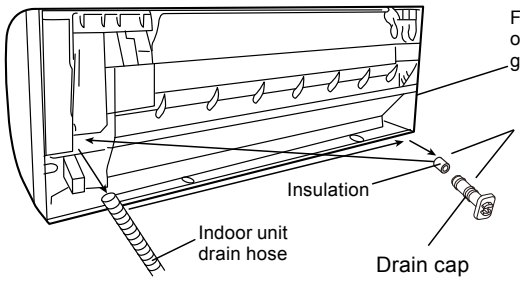

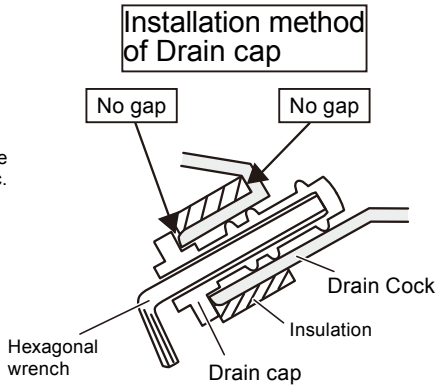

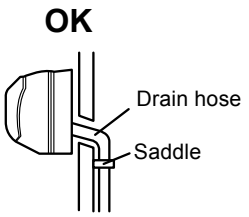

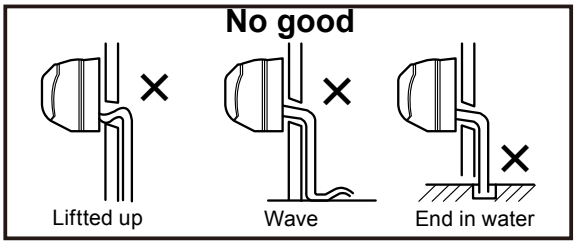

■ WALL MOUNTED TYPE (18-30 Models)

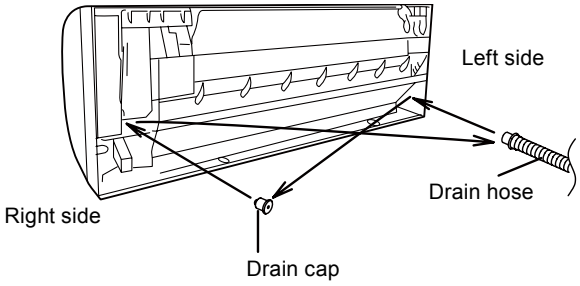

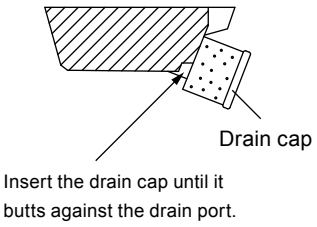

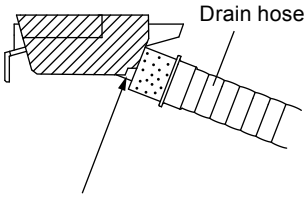

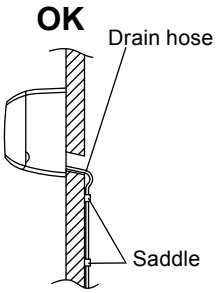

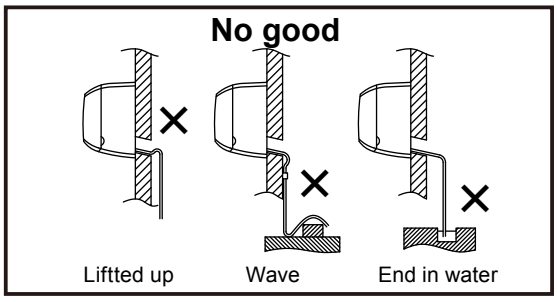

SYSTEM DESIGN

■ CENTRAL DRAIN PROCESS

When converging multiple drain pipes , install according to the procedure shown below.

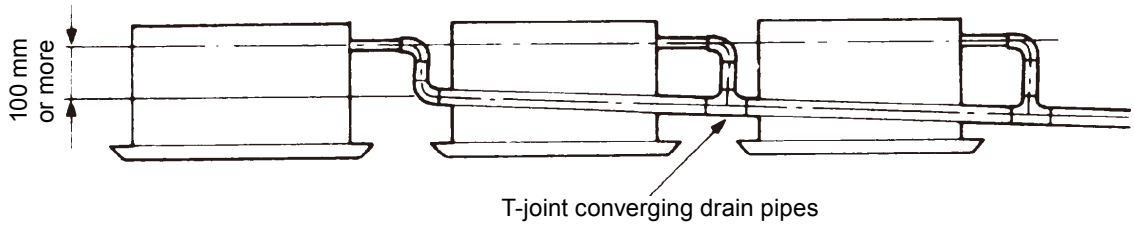

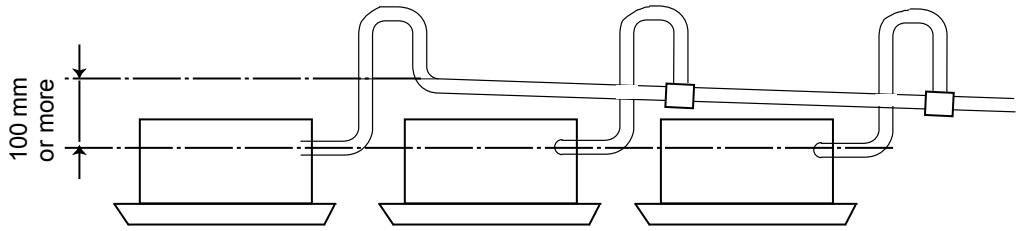

For High static pressure duct type

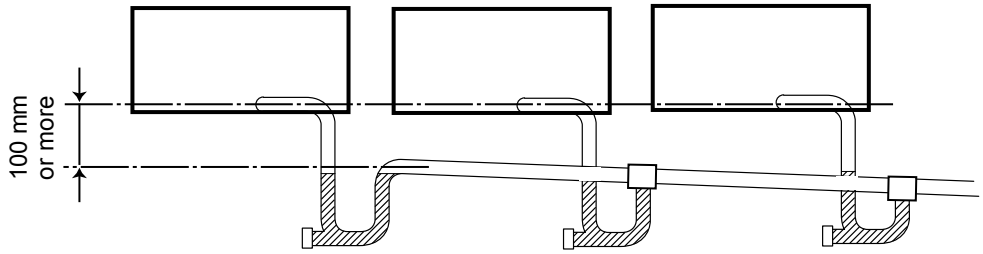

For Slim duct type

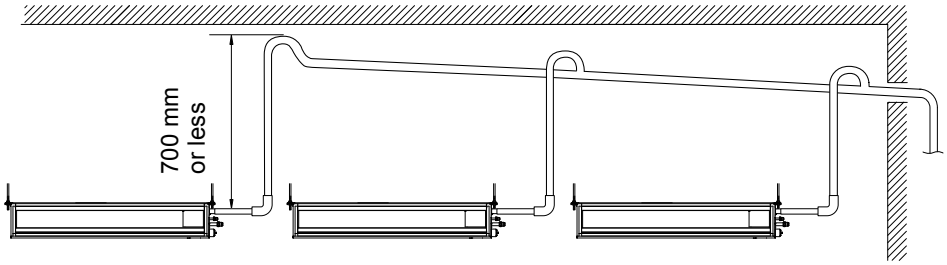

Select converging drain pipes whose diameter is suitable for the operating capacity of the unit.

SYSTEM DESIGN

■ DRAIN INSULATION

- Please confirm water flows into Drain pan of the indoor unit, and drain is done normally when the connection of Drain hose is completed.
- Please check whether there is water leak part in the Drain piping.
- Please insulate it from heat by the heat insulator of enough thickness so that there is no dewy when the confirmation ends.
- Fix the drain pipe on to the wall with saddle.

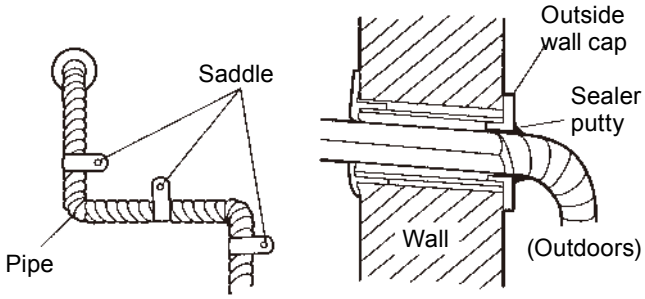

- After put out Drain hose from the wall, please cover the space with the putty etc.

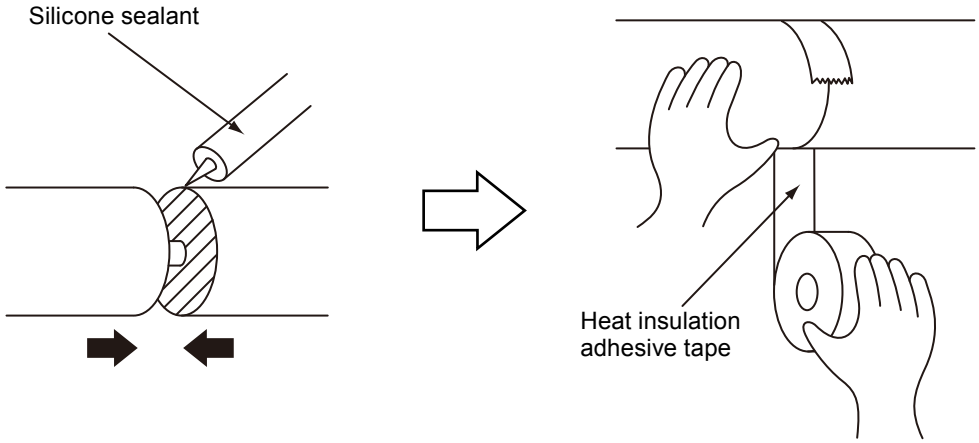

- Be sure to coat the entire end surface.

If there is a gap it could cause condensation

SYSTEM DESIGN

6. STANDARD ACCESSORIES

6-1. OUTDOOR UNIT

The following installation parts are supplied. Use them as required.
Do not discard any accessories until the installation work has been completed.

Name and shape	Q'ty	Application
Specifications manual 	1	
Installation manual 	1	
Drain cap 	3	For outdoor unit drain piping work
Drain pipe 	1	For outdoor unit drain piping work

Name and shape	Q'ty	Application
Cable tie 	2	For binding power cable and transmission cable
Reducer 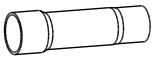	1	For AJ*A54LALH

SYSTEM DESIGN

6-2. INDOOR UNIT

■ COMPACT CASSETTE TYPE

INDOOR UNIT ACCESSORIES

Name and shape	Q'ty	Application
Operating manual 	1	
Installation manual 	1	
Cable tie (Large) 	4	For fixing the connection pipe (Large and Small)
Cable tie (Medium) 	2	For transmission and remote controller cable binding.
Coupler heat insulation (Small) 	1	For indoor side pipe joint (Liquid pipe)
Coupler heat insulation (Large) 	1	For indoor side pipe joint (Gas pipe)
Special nut A (Large flange) 	4	For installing indoor unit
Special nut B (Small flange) 	4	For installing indoor unit
Template (Carton top) 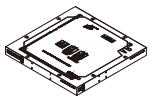	1	For ceiling openings cutting Also used as packing
Drain hose 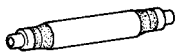	1	For installing drain pipe
Hose band 	1	For installing drain hose
Drain hose insulation 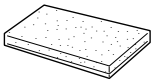	1	For installing drain pipe

CASSETTE GRILLE ACCESSORIES

Name and shape	Q'ty	Application
Connector cover 	1	For covering connector
Tapping screw (M5 × 12mm) 	4	For mounting cassette grille
Tapping screw (M4 × 12mm) 	1	For mounting connector cover

SYSTEM DESIGN

SYSTEM DESIGN

■ CASSETTE TYPE

Name and shape	Q'ty	Application
Operating manual 	1	
Installation manual 	1	
Cable tie (Large) 	4	For fixing the connection pipe (Large and Small)
Cable tie (Medium) 	2	For transmission and remote controller cable binding.
Coupler heat insulation (Small) 	1	For indoor side pipe joint (Liquid pipe)
Coupler heat insulation (Large) 	1	For indoor side pipe joint (Gas pipe)

Name and shape	Q'ty	Application
Template (Carton top) 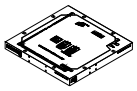	1	For installing indoor unit.
Washer 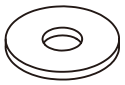	8	For installing indoor unit
Insulation 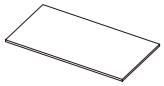	1	For installing drain pipe
Drain hose assy 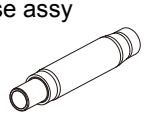	1	For installing drain pipe
Hose band 	1	For installing drain hose
Drain pipe insulation 	1	For installing drain pipe

SYSTEM DESIGN

SYSTEM DESIGN

■ LOW STATIC PRESSURE DUCT / CONCEALED FLOOR TYPE

Name and shape	Q'ty	Application
Operating manual 	1	
Installation manual 	1	
Installation template 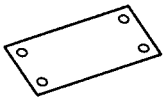	1	For positioning the indoor unit
Hanger 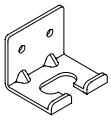	4	For suspending the indoor unit
Tapping screw (M4 x 10mm) 	8	For installing the hanger
Special nut A (Large flange) 	4	For suspending the indoor unit from ceiling
Special nut B (Small flange) 	4	For suspending the indoor unit from ceiling. For fixing the indoor unit on the floor.
Coupler heat insulation (Large) 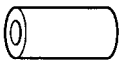	1	For indoor side pipe joint (Gas pipe)

Name and shape	Q'ty	Application
Coupler heat insulation (Small) 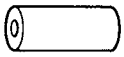	1	For indoor side pipe joint (Liquid pipe)
Cable tie 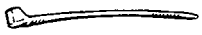	Medium 2	For transmission and remote controller cable binding.
	Large 4	For fixing the coupler heat insulation.
Filter 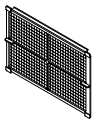	2 (AR07 /09) 3 (AR12 /14/18)	
Wire 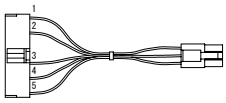	1	Use for static pressure under 25 Pa.
Insulation (outlet) 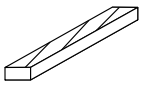	Small 2 Large 2	For outlet flange
Drain hose 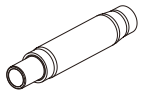	1	For connecting the drain pipe
Hose band 	1	For installing drain hose
Drain hose insulation B 	1	Insulates the drain hose.
One touch bushing 	1	This is used when attaching optional items.

SYSTEM DESIGN

SYSTEM DESIGN

■ SLIM DUCT / SLIM CONCEALED FLOOR TYPE

Name and shape	Q'ty	Application
Operating manual 	1	
Installation manual 	1	
Installation template 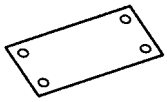	1	For positioning the indoor unit
Washer 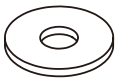	8	For installing indoor unit
Coupler heat insulation (Large) 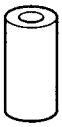	1	For indoor side pipe joint (Large pipe)
Coupler heat insulation (Small) 	1	For indoor side pipe joint (Small pipe)
Cable tie 	Medium 2	For transmission and remote controller cable binding.
	Large 4	For fixing the coupler heat insulation.

Name and shape	Q'ty	Application
Filter (Small) 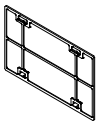	2 (AR04/07/09/12/14/24)	
Filter (Big) 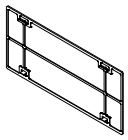	2 (AR18)	
	1 (AR24)	
Drain hose 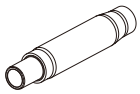	1	For installing drain pipe
Hose band 	1	For installing drain hose
Drain hose insulation B 	1	Insulates the drain hose

SYSTEM DESIGN

SYSTEM DESIGN

■ MEDIUM STATIC PRESSURE DUCT TYPE

Name and shape	Q'ty	Application
Operating manual 	1	
Installation manual 	1	
Cable tie (Large) 	5	For fixing the connection pipe (Large and Small) and drain cap
Cable tie (Medium) 	3	For transmission and remote controller cable binding.
Coupler heat insulation (Small) 	1	For indoor side pipe joint (Liquid pipe)
Coupler heat insulation (Large) 	1	For indoor side pipe joint (Gas pipe)

Name and shape	Q'ty	Application
Special nut A (Large flange) 	4	For suspending the indoor unit from ceiling
Special nut B (Small flange) 	4	
Hanger 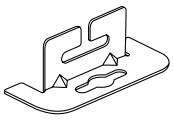	4	For suspending the indoor unit from ceiling
Drain hose 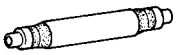	1	For installing drain pipe
Hose band 	1	For installing drain hose
Drain hose insulation 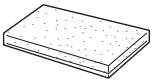	2	Insulates the drain hose and drain cap

SYSTEM DESIGN

SYSTEM DESIGN

■ HIGH STATIC PRESSURE DUCT TYPE

Name and shape	Q'ty	Application
Operating manual 	1	
Installation manual 	1	
Cable tie (Large) 	4	For fixing the coupler heat insulation
Cable tie (Medium) 	2	For transmission and remote controller cable binding.
Coupler heat insulation (Small) 	1	For indoor side pipe joint (Liquid pipe)
Coupler heat insulation (Large) 	1	For indoor side pipe joint (Gas pipe)

Name and shape	Q'ty	Application
Special nut A (Large flange) 	4	For suspending the indoor unit from ceiling
Special nut B (Small flange) 	4	
Drain hose 	2	For installing drain pipe
Hose band 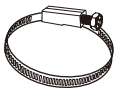	2	For installing drain hose
Drain hose insulation 	2	For installing drain hose

SYSTEM DESIGN

SYSTEM DESIGN

■ FLOOR / CEILING TYPE

Name and shape	Q'ty	Application
Operating manual 	1	
Installation manual 	1	
Cover plate (left) 	1	
Cover plate (right) 	1	
Tapping screw (M4 x 10mm) 	2	
Installation template 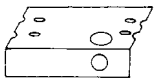	1	For positioning the indoor unit For under ceiling type
Bracket (left) 	1	For suspending the indoor unit from ceiling
Bracket (right) 	1	
Special nut 	4	
Wall bracket 	2	For suspending the indoor unit on the wall

Name and shape	Q'ty	Application
Tapping screw (M4 x 20mm) 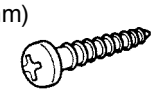	6	For fixing the wall bracket
Coupler heat insulation 	2	For indoor side pipe joint
Cable tie 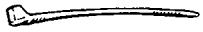	Large 4	For fixing the coupler heat insulation
	Medium 2	For transmission and remote controller cable binding
Drain hose 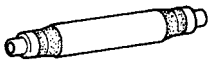	1	For installing drain pipe
Hose band 	1	For installing drain hose
Drain hose insulation 	1	Adhesive type 100 x 220 (mm)
VT wire 	1	For fixing the drain hose L=280 (mm)
Insulation (pipe) 	1	Adhesive type 160 x 110 (mm)
Silencer pipe 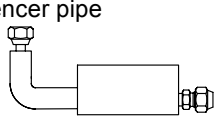	1	Connect the silencer pipe to the small (Liquid) pipe

OPTIONAL PARTS

Name and shape	Part No.	Application
Auxiliary pipe 	9374714025	For indoor side pipe joint (For AB18, AB24)

SYSTEM DESIGN

■ CEILING TYPE

Name and shape	Q'ty	Application
Operating manual 	1	
Installation manual 	1	
Drain hose 	1	For installing drain pipe
Hose band 	1	For installing drain hose
Drain hose insulation 	1	Adhesive type 220 x 100 (mm)
VT wire 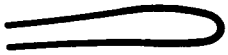	1	For fixing the drain hose L=280 (mm)
Coupler heat insulation (Large) 	2	For indoor side pipe joint (Gas pipe)
Coupler heat insulation (Small) 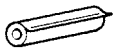	1	For indoor side pipe joint (Liquid pipe)

Name and shape	Q'ty	Application
Cable tie 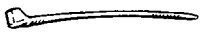	Extra large 4	For fixing the coupler heat insulation
	Large 2	
	Medium 2	For transmission and remote controller cable binding
Special nut A (Large flange) 	4	For installing indoor unit
Special nut B (Small flange) 	4	For installing indoor unit
Installation template 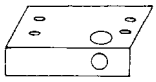	1	For positioning the indoor unit
Auxiliary pipe assembly 	1	For connecting the piping

SYSTEM DESIGN

SYSTEM DESIGN

■ WALL MOUNTED TYPE

● Models : AS*E04, 07, 09, 12, 14, AS*A04, 07, 09, 12, 14

Name and shape	Q'ty	Application
Operating manual 	1	
Installation manual 	1	
Wall hook bracket 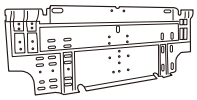	1	For indoor unit installation
Cable tie 	1	For remote control cable binding
Cloth tape 	1	For indoor unit installation

Name and shape	Q'ty	Application
Tapping screw (M4 x 25mm) 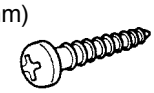	8	For wall hook bracket installation
Connecting cable 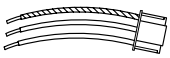	1	For wired remote controller installation
Air cleaning filter 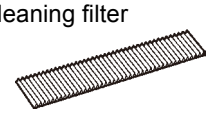	2	For installation, refer to the "CLEANING AND CARE" in the operating manual.
Air cleaning filter frame 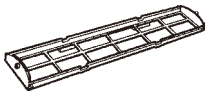	2	
Seal A 	1	For indoor unit installation

■ WALL MOUNTED TYPE

● Models : AS*A18, 24, 30

Name and shape	Q'ty	Application
Operating manual 	1	
Installation manual 	1	
Wall hook bracket 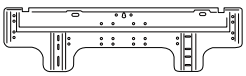	1	For indoor unit installation
Cloth tape 	1	For indoor unit installation
Tapping screw (M4 x 25mm) 	8	For wall hook bracket installation
Air cleaning filter 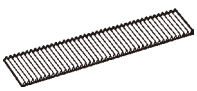	2	For installation, refer to the "CLEANING AND CARE" in the operating manual.
Air cleaning filter frame 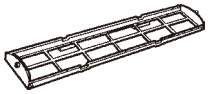	2	

Name and shape	Q'ty	Application
Drain hose Insulation 	1	For installing drain hose
Connecting wire 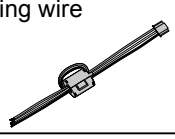	1	For wired remote controller installation
Cable tie 	1	For transmission and remote controller cable binding

SYSTEM DESIGN

Refrigerant R410A
INVERTER

AIRSTAGE™
Variable Refrigerant Flow System

7. FUNCTION SETTING

DTV_VR2E018E_03--CHAPTER07
2013.04.01

CONTENTS

7. FUNCTION SETTING

1. SYSTEM SETTING 07-01
1-1. SYSTEM TYPE SETTING 07-01
1-2. ADDRESS SETTING 07-03
1-3. MANUAL ADDRESS SETTING METHOD 07-07
1-4. ADDRESS SETTING BY REMOTE CONTROLLER 07-18
1-4-1. WIRELESS REMOTE CONTROLLER 07-18
1-4-2. WIRED REMOTE CONTROLLER 07-25
1-4-3. SIMPLE REMOTE CONTROLLER 07-30
1-4-4. WIRED REMOTE CONTROLLER (Touch panel) 07-35
1-5. AUTOMATIC ADDRESS SETTING 07-40
1-5-1. SIGNAL AMPLIFIER AUTOMATIC ADDRESS SETTING 07-42
1-5-2. INDOOR UNIT AUTOMATIC ADDRESS SETTING 07-44
1-5-3. RB UNIT AUTOMATIC ADDRESS SETTING 07-46
1-5-4. EXAMPLE FLOW 07-48
1-6. TERMINAL RESISTOR SETTING 07-51
1-7. INDOOR UNIT CONNECTION CHECK 07-52

2. FUNCTION SETTING 07-54
2-1. OUTDOOR UNIT 07-54
2-1-1. VR-II series 07-57
2-1-2. V-II series 07-62
2-1-3. J-II series 07-66
2-2. INDOOR UNIT (setting by switch) 07-70
2-3. INDOOR UNIT (setting by wireless remote controller) 07-79
2-4. INDOOR UNIT (setting by wired remote controller) 07-86
2-5. INDOOR UNIT (setting by simple remote controller) 07-90
2-6. INDOOR UNIT (setting by wired remote controller [Touch panel]) 07-94
2-7. FUNCTION DETAILS 07-98
2-8. RB UNIT 07-100
2-9. WIRED, SIMPLE REMOTE CONTROLLER 07-103
2-10. GROUP REMOTE CONTROLLER 07-105
2-11. TOUCH PANEL CONTROLLER 07-107

CONTENTS

7. FUNCTION SETTING

2-12. CENTRAL REMOTE CONTROLLER 07-108

2-13. WIRED REMOTE CONTROLLER (Touch panel) 07-109

2-13-1. REMOTE CONTROLLER ADDRESS SETTING 07-109

2-13-2. REMOTE CONTROLLER MASTER/SLAVE SETTING 07-111

2-13-3. INDOOR UNIT ADDRESS VERIFICATION 07-112

2-14. NETWORK CONVERTOR 07-113

2-15. SIGNAL AMPLIFIER 07-114

2-17. DUCT STATIC PRESSURE SETTING 07-117

2-18. ADMINISTRATIVE INDOOR UNIT SETTING 07-120

2-18-1. SETTING METHOD 07-121

2-19. ENERGY SAVING SETTING (SYSTEM CONTROLLER) 07-124

1. SYSTEM SETTING

1-1. SYSTEM TYPE SETTING

Set the DIP switch to the corresponding system type as shown in the table.

Do not use a nonexistent switch combination.

Note
∗Perform the system setting and address setting , before turning on the power.
∗For the air conditioner to operate properly, perform the correct setting.

■ OUTDOOR UNIT SETTING

(◆. . . Factory Setting)

<step 1>

Set the outdoor unit address setting

(This function is available VR-II and V-IIseries)

SETTING FOR MASTER UNIT & SLAVE UNIT.

Set the DIP SW SET3-1 & 3-2
Master : SET3-1 OFF, SET3-2 OFF ◆
Slave 1 : SET3-1 OFF, SET3-2 ON
Slave 2 : SET3-1 ON , SET3-2 OFF

<step 2>

Set the number of slave unit

(This function is available VR-II and V-IIseries)

SETTING FOR MASTER UNIT ONLY.

Set the DIP SW SET3-3 & 3-4
1 : SET3-3 OFF, SET3-4 OFF : Master x 1 ◆
2 : SET3-3 OFF, SET3-4 ON : Master x 1 Slave x 1
3 : SET3-3 ON , SET3-4 OFF : Mater x 1, Slave x 2

<step 3>

Set the number of outdoor units installed

(This function is available VR-II and V-IIseries)

SETTING FOR MASTER UNIT & SLAVE UNIT.

Set the DIP SW SET5-1 & 5-2
1 : SET5-1 OFF, SET5-2 OFF : Number of 1 ◆
2 : SET5-1 OFF, SET5-2 ON : Number of 2
3 : SET5-1 ON , SET5-2 OFF : Number of 3

<step 4>

Refrigerant circuit address setting

SETTING FOR MASTER UNIT & SLAVE UNIT.

Set the Rotary SW REF AD x10 & x1
See the switch detail for "1-2. Address setting"

<step 5>

Terminal resistor setting

SETTING FOR MASTER UNIT & SLAVE UNIT.

Set the DIP SW SET5-4
See the switch detail for "1-8. Terminal resistor setting"

<step 6>

Indoor unit connection check

(This function is available J-II series)

See the detail for "5-9 Indoor unit connection check"

<step 7>

Function setting

FUNCTION SETTING

■ INDOOR UNIT SETTING

Please refer to the correct SW position for 2. Function Setting.

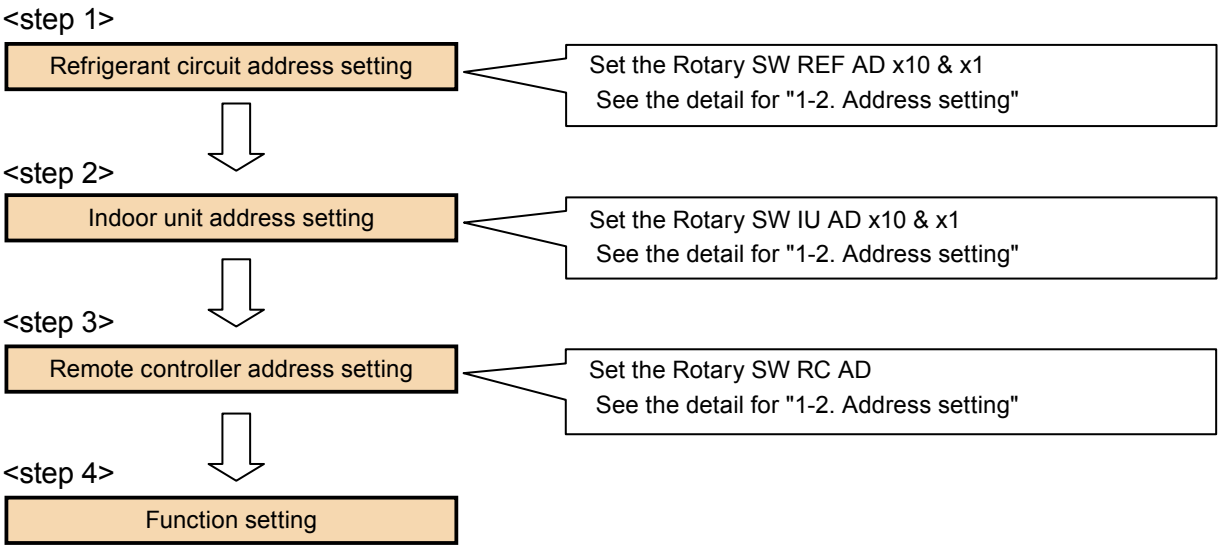

■ RB UNIT SETTING

Please refer to the correct SW position for 2. Function Setting.

(This function is available VR-II series)

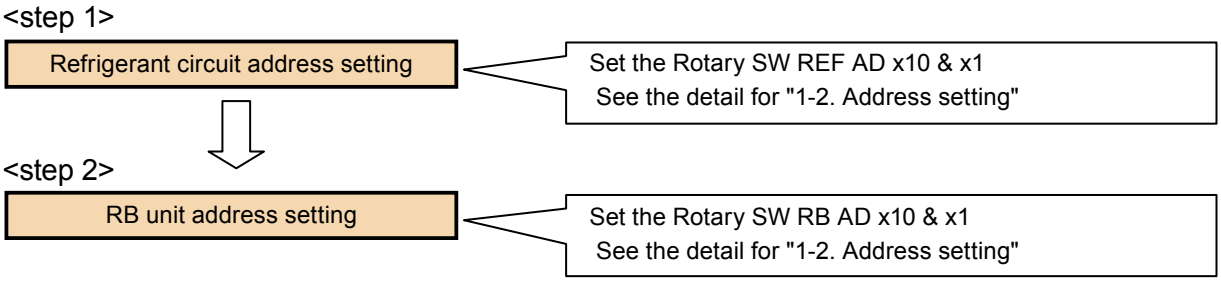

■ REMOTE CONTROLLER SETTING

In case of Wired remote controller, Simple remote controller.

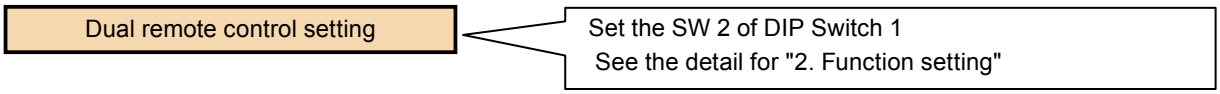

∗Other than above unit , Please refer the 2. Function setting and installation manual.

FUNCTION SETTING

1-2. ADDRESS SETTING

For this system, each address should be preset before operation.
Please refer following table for outdoor unit, indoor unit, RB unit and each remote controller.

■ KINDS OF ADDRESS AND SETTING RANGE

UNIT	SETTING		SETTING RANGE	TYPE OF SWITCH	REMARKS
Outdoor unit	A	Refrigerant circuit address	00 ~ 99	Setting example 01 	Arbitrary numbers can be set in range of 00-99
	B	Outdoor unit address *1	0 ~ 2	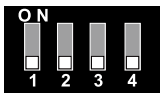 SET3	DIP SW SET3-1 DIP SW SET3-2
	C	Number of slave unit *1	0 ~ 2		DIP SW SET3-3 DIP SW SET3-4 (Master unit only)
	L	Number of outdoor units installed *1	1 ~ 3	 SET5	DIP SW SET5-1 DIP SW SET5-2
		Terminal resistor	ON/OFF		DIP SW SET5-4 See the setting method 1-8
Indoor unit	D	Refrigerant circuit address	00 ~ 99	**■ Manual address setting** Setting example 01 	Arbitrary numbers can be set in range of 00-99
				■ Infrared address setting Set this switch to 00 at factory setting.	See the setting method 1-4
				■ Wired R.C. address setting Set this switch to 00 at factory setting.	See the setting method 1-5
				■ Simple R.C. address setting Set this switch to 00 at factory setting.	See the setting method 1-6
				■ Automatic address setting Set this switch to 00 at factory setting.	See the setting method 1-7
	E	Indoor unit address	00 ~ 63	**■ Manual address setting** Setting example 12 	Arbitrary numbers can be set in range of 00-63
				■ Infrared address setting Set this switch to 00 at factory setting.	See the setting method 1-4
				■ Wired R.C. address setting Set this switch to 00 at factory setting.	See the setting method 1-5
				■ Simple R.C. address setting Set this switch to 00 at factory setting.	See the setting method 1-6
				■ Automatic address setting Set this switch to 00 at factory setting.	See the setting method 1-7
	F	Remote controller address	0 ~ 15	**■ Manual address setting** Setting example 10 	3 wire type R.C. can be set in range of 0-15 2 wire type R.C. can be set in range of 1-15
				■ Automatic address setting Set this switch to 0 at factory setting.	2 wire type only

*Set up after confirming the details of each unit.
*1: This function is available VR-II and V-IIseries

FUNCTION SETTING

FUNCTION SETTING

■ KINDS OF ADDRESS AND SETTING RANGE

UNIT	SETTING		SETTING RANGE	TYPE OF SWITCH	REMARKS
RB unit	O	Refrigerant circuit address	00 ~ 99	**■ Manual address setting** Setting example 01 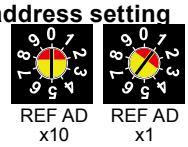 REF AD x10 REF AD x1	Arbitrary numbers can be set in range of 00-99
				■ Automatic address setting Set this switch to 00 at factory setting.	See the setting method 1-7.
	P	RB unit address	00 ~ 63	**■ Manual address setting** Setting example 12  RB AD x10 RB AD x1	Arbitrary numbers can be set in range of 00-63
				■ Automatic address setting Set this switch to 00 at factory setting.	See the setting method 1-7.
Touch panel controller	G	Controller / Convertor address	00 ~ 15 *1		See the setting method 2-8
Network convertor	H	Controller / Convertor address	00 ~ 15 *1	Setting example 01 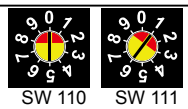 SW 110 (10 digit) SW 111 (1 digit)	See the setting method 2-9
		Refrigerant circuit address	00 ~ 99		
Group remote controller	I	Group remote controller address	00 ~ 03		See the setting method 2-7
Wired, simple remote controller	J	Dual remote control	ON/OFF	SW 2 of DIP Switch 1	See the setting method 2-6
Signal amplifier	K	Signal amplifier address	1 ~ 8	**■ Manual address setting**	See the setting method 2-10
				■ Automatic address setting Set to 1 at factory setting.	See the setting method 1-7
Network convertor for LonWorks®	M	Controller / Convertor address	00 ~ 15 *1		See the setting method 2-11
Central remote controller	N				See the setting method 2-12
Wired remote controller (Touch panel)	F	Remote controller address	1 ~ 32 *2	**■ Manual address setting**	See the setting method
			0 ~ 15	**■ Automatic address setting**	

*Set up after confirming the details of each unit.

*1: The sum total of the Touch panel controller, Central remote controller, Network convertor for Group remote controller and Network convertor for LonWorks® is a maximum of 16.
Note: Address of the Touch panel controller, Central remote controller, Network convertor for Group remote controller and Network convertor for LonWorks® must not be same.

*2: The address can be set from 1 to 32. However, do not set the same number as that for the remote-controller address of an indoor unit connected using the same remote-control cable.
Please set "Remote controller address" of Wired remote controller (Touch panel) in Manual address setting only. It is not necessary to set in Automatic address setting.

FUNCTION SETTING

■ SETTING EXAMPLE

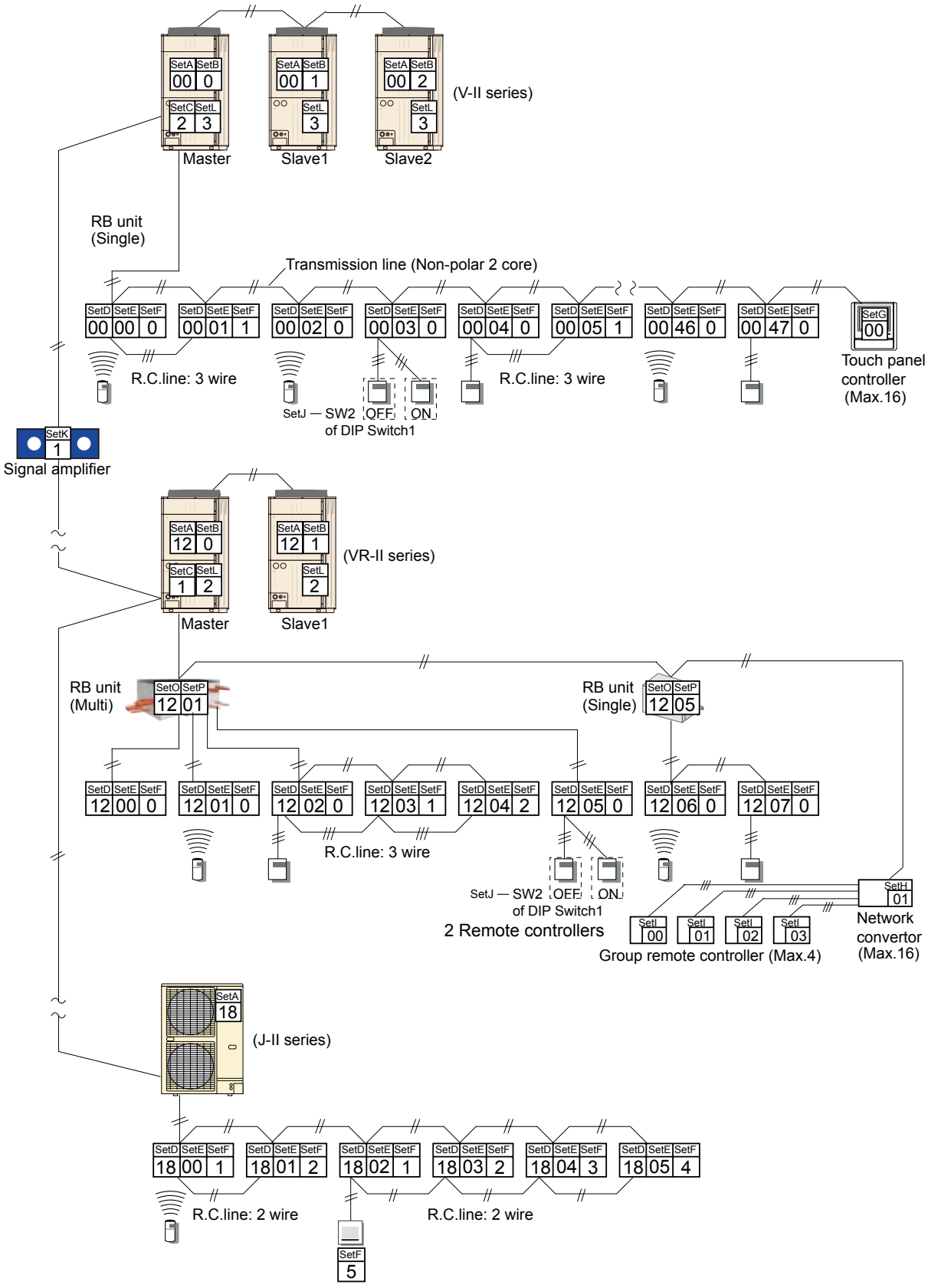

FUNCTION SETTING

■ SETTING EXAMPLE

● Outdoor unit setting

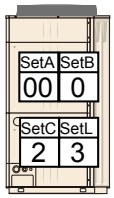

SetA: Refrigerant circuit address
(Rotary SW REF AD x10, x1)
SetB: Outdoor unit address
(DIP SW SET3-1, 3-2)
SetC: Number of slave unit
(DIP SW SET3-3, 3-4)
<Master unit only>
SetL: Number of outdoor units installed
(DIP SW SET5-1, 5-2)

● Touch panel controller setting

SetG: Controller address (Max.16)

● Network convertor setting

SetH: Convertor address
(for Group remote controller:Max.16)

Refrigerant circuit address
(for Single split AC:Max.100)

● Central remote controller setting

SetN: Controller address (Max.16)

● Group remote controller setting

SetI: Group remote controller address (Max.4)

● Signal amplifier setting

SetK: Signal amplifier address

● Indoor unit setting

SetD	SetE	SetF
63	06	0

SetD		SetE		SetF
Refrigerant circuit address		Indoor unit address		Remote controller address
REF AD X10	REF AD X1	IU AD X10	IU AD X1	RC AD

● RB unit setting

SetO	SetP
63	06

SetO		SetP	
Refrigerant circuit address		RB unit address	
REF AD X10	REF AD X1	RB AD X10	RB AD X1

● Wired, Simple remote controller setting

SetJ: Dual remote control
(SW2 of DIP Switch1)

● Network convertor for LonWorks® setting

SetM: Convertor address

● Wired remote controller (Touch panel) setting

SetF: Remote controller address

＊Instructions for setting up the address

1. The refrigerant circuit address of the indoor units, outdoor units and RB units can be set to arbitrary numbers in the range of 0 to 99.
2. The Indoor unit address and RB unit address can be set to arbitrary numbers in the range of 0 to 63.
3. In case of 3 wire type of R.C., set the remote controller address in the order of 0,1,2, . . . ,15.(Blank is not allowed)
4. In case of 2 wire type of R.C.(Automatic address setting), set the remote controller address in the 0.
5. In case of 2 wire type of R.C.(Manual address setting), can be set to arbitrary numbers in the range of 1 to 15. Can not be set to 0.
6. Touch panel controller address can be set to arbitrary numbers in the range of 0 to 15.

7 : The sum total of the Touch panel controller, Central remote controller, Network convertor for Group remote controller and Network convertor for LonWorks® is a maximum of 16.

8. Please keep Address No. of Touch Panel Controller from overlapping the controller (Central remote controller, Network convertor for Group remote controller and Network convertor for LonWorks®) connected to the same VRF Network system.

FUNCTION SETTING

1-3. MANUAL ADDRESS SETTING METHOD

■ ADDRESS SETTING DESCRIPTION

● Refrigerant circuit address (Set A, Set D and Set O)

In case of 2 or more refrigerant system in VRF network system, each refrigerant system should be set an exclusive refrigerant circuit address.

Refrigerant system : It means same refrigerant circuit which has connected between outdoor unit and indoor unit by piping.

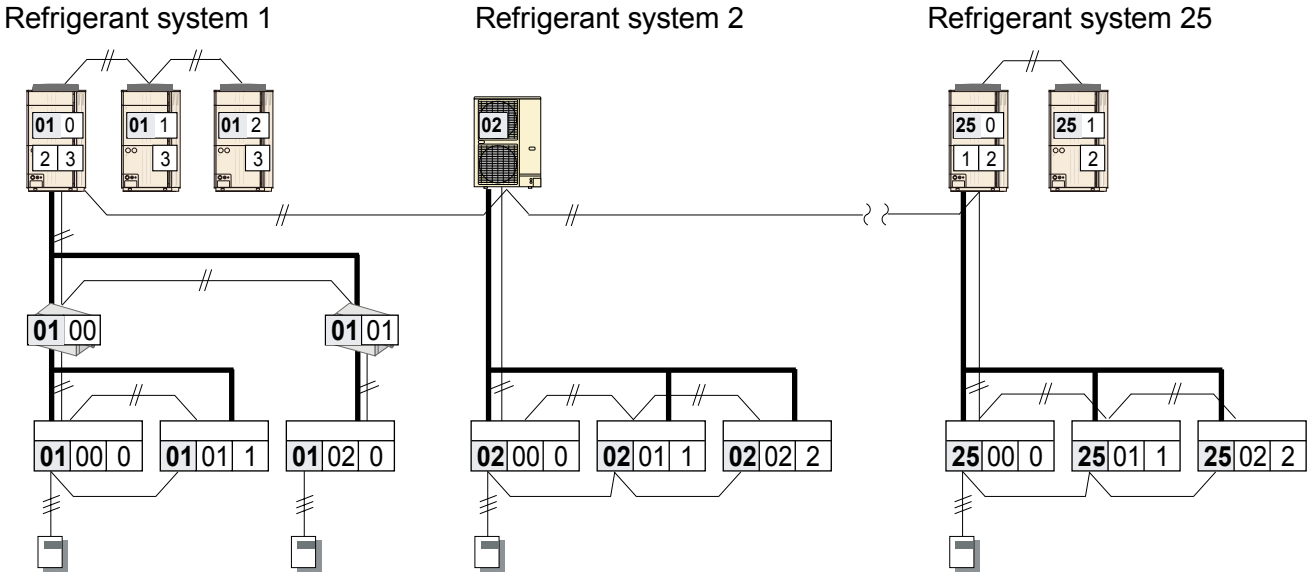

● Example

Outdoor unit (Set A), Indoor unit (Set D),
RB unit (Set O)

Refrigerant circuit address	Rotary SW setting	
	REF AD x10	REF AD x1
01	 0	 1
11	 1	 1
25	 2	 5
50	 5	 0

Setting range 00 - 99(Arbitrary numbers can be set)

All the indoor unit, all the RB unit and outdoor unit in same refrigerant circuit should be set same address.

FUNCTION SETTING

● Outdoor unit address (Set B)

This function is available VR-II and V-II series.

Please set the outdoor unit address for each outdoor unit.

Outdoor unit is preset "0" , at factory setting.

So that 1 outdoor unit system is not required for the field setting.

In case of 2 or 3 outdoor units connected in same refrigerant circuit, set the slave unit which has installed farther from master unit to Slave2 setting "2".

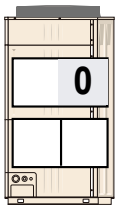

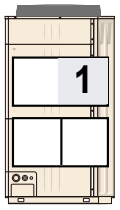

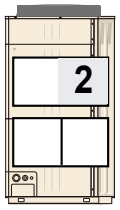

	Master	Slave1	Slave2
Outdoor unit address	0	1	2
	SW SET3-1 OFF SW SET3-2 OFF	SW SET3-1 OFF SW SET3-2 ON	SW SET3-1 ON SW SET3-2 OFF

Outdoor unit address		0 ◆	1	2
DIP SW	SET3-1	OFF	OFF	ON
	SET3-2	OFF	ON	OFF

(◆. . . Factory Setting)

● Number of slave unit (Set C)

This function is available VR-II and V-II series.

(Set at Master unit PCB only)

Please set the number of slave unit on Master unit PCB.

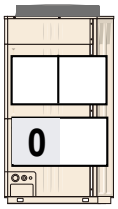

Number of slave unit

0

SW SET3-3 OFF
SW SET3-4 OFF

Master

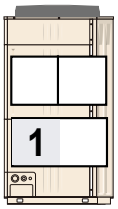

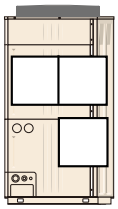

Number of slave unit

1

SW SET3-3 OFF
SW SET3-4 ON

Master **Slave 1**

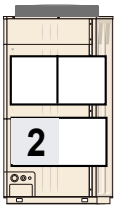

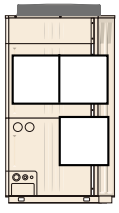

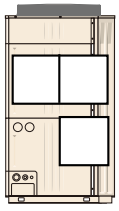

Number of slave unit

2

SW SET3-3 ON
SW SET3-4 OFF

Master **Slave 1** **Slave 2**

Number of slave unit		0 ◆	1	2
DIP SW	SET3-3	OFF	OFF	ON
	SET3-4	OFF	ON	OFF

(◆. . . Factory Setting)

FUNCTION SETTING

● Number of outdoor units installed (Set L)

This function is available VR-II and V-II series.

The number of outdoor units installed in one refrigerant system must be set.

Set for all outdoor units.

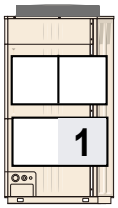

Master

Number of outdoor unit

1

SW SET5-1 OFF

SW SET5-2 OFF

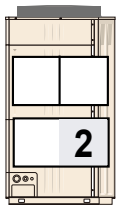

Master

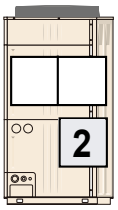

Slave 1

Number of outdoor unit

2

SW SET5-1 OFF

SW SET5-2 ON

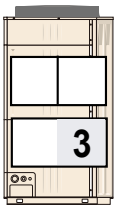

Master

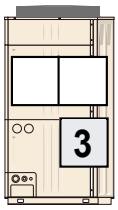

Slave 1

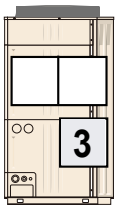

Slave 2

Number of outdoor unit

3

SW SET5-1 ON

SW SET5-2 OFF

Number of outdoor unit		1 ◆	2	3
DIP SW	SET5-1	OFF	OFF	ON
	SET5-2	OFF	ON	OFF

(◆. . . Factory Setting)

FUNCTION SETTING

● Indoor unit address (Set E)

Each indoor unit in same refrigerant system should be set an exclusive indoor unit address.

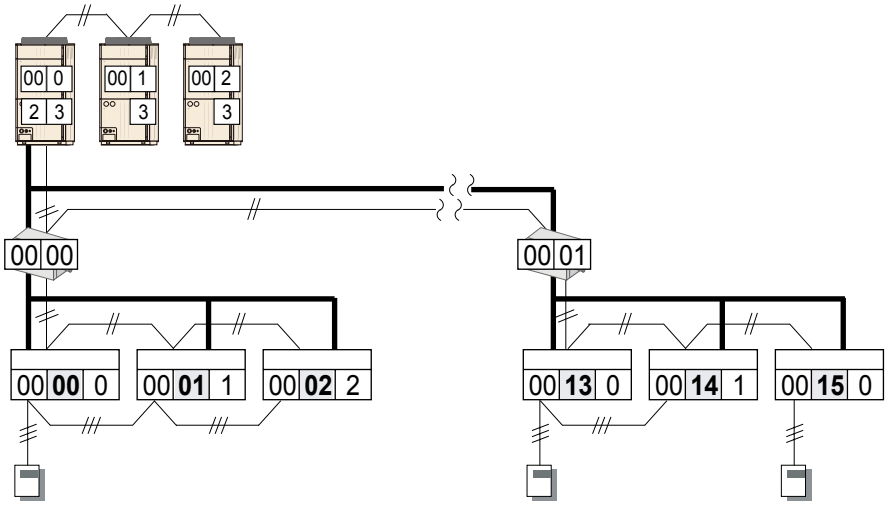

Indoor unit address	Rotary SW setting	
	IU AD x10	IU AD x1
03	 0	 3
11	 1	 1
30	 3	 0
47	 4	 7

*Setting range 00 - 63(Arbitrary numbers can be set)

*Do not set indoor unit address to the range of 64 from 99.

*Do not set the same address number to two or more indoor units.

FUNCTION SETTING

● Remote controller address (Set F)

1 individual remote controller can be controlled Max.16 indoor unit with connecting remote controller cable.

These units connecting by remote controller cable regards as remote controller group.

Even 1 indoor unit as 1 or no remote controller connection regards 1 remote controller group.

i) 3 wire type

Only for manual address setting

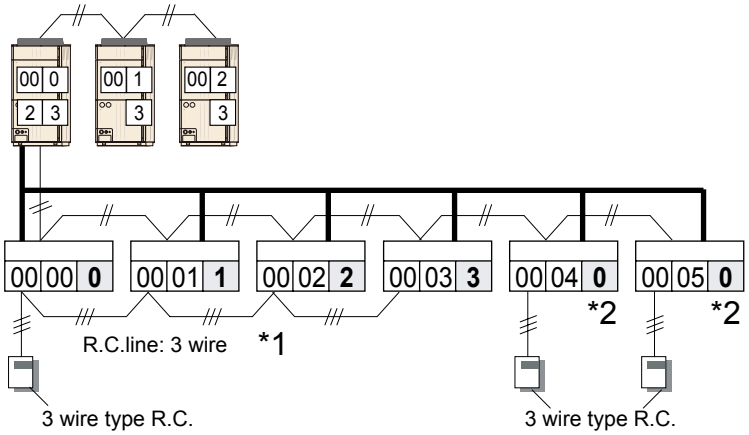

Remote controller address	Rotary SW setting
	RC AD
0	 0
1	 1
11	 B
15	 F

Remote controller address	Rotary SW setting
	RC AD
0	0
1	1
2	2
3	3
4	4
5	5
6	6
7	7
8	8
9	9
10	A
11	B
12	C
13	D
14	E
15	F

*1 : Set the remote controller address in the order of 0,1,2, . . . ,15.(Blank is not allowed)

*2 : When remote controller group is not constructed (1:1 connection of indoor unit and remote controller), be sure to set the remote controller address to "0" (factory setting).

FUNCTION SETTING

ii) 2 wire type

It can choose either automatic address setting or manual address setting.

① When setting the automatic address.

Set the remote controller address in the "0" only. (Factory setting is "0")

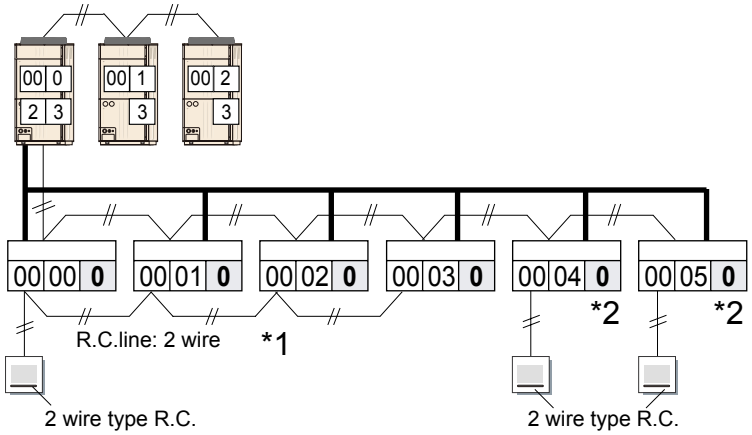

*1 : Set the remote controller address in the "0" only
Address is automatically assigned from Remote controller.

*2 : When remote controller group is not constructed (1:1 connection of indoor unit and remote controller), be sure to set the remote controller address to "0" (factory setting).

FUNCTION SETTING

② When setting the manual address.

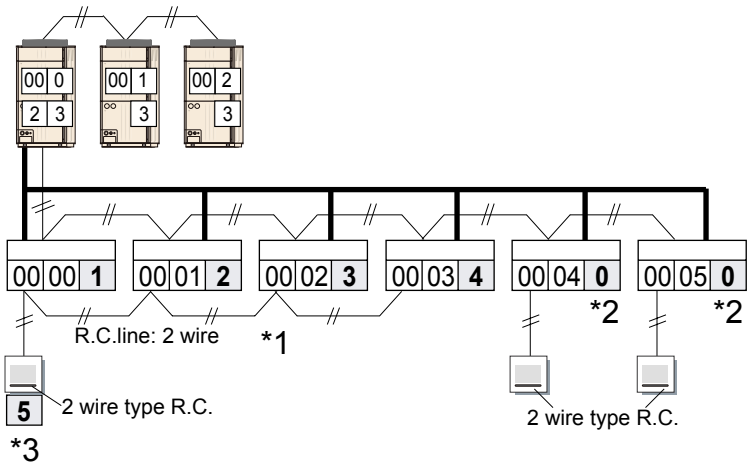

●Rotary SW setting of Indoor unit

Remote controller address	Rotary SW setting
	RC AD
0	0
1	1
11	B
15	F

Remote controller address	Rotary SW setting
	RC AD
0	0
1	1
2	2
3	3
4	4
5	5
6	6
7	7
8	8
9	9
10	A
11	B
12	C
13	D
14	E
15	F

*1 : **Note: When setting the manual address, can not be set the "0".**

*2 : When remote controller group is not constructed (1:1 connection of indoor unit and remote controller), be sure to set the remote controller address to "0" (factory setting).

*3 : The address can be set from 1 to 32. However, do not set the same number as that for the remote-controller address of an indoor unit connected using the same remote-control cable.
Please set "Remote controller address" of Wired remote controller (Touch panel) in Manual address setting only. It is not necessary to set in Automatic address setting.

FUNCTION SETTING

● RB unit address (Set P)

Each RB unit in same refrigerant system should be set an exclusive RB unit address.

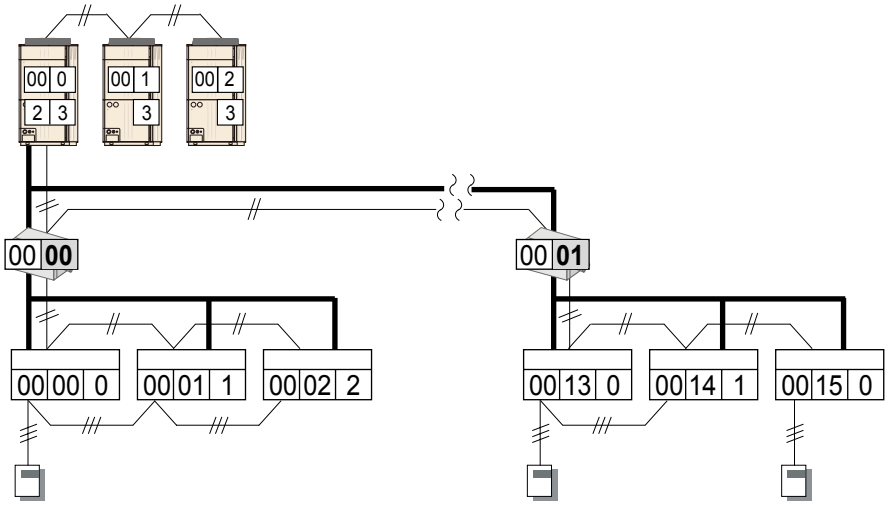

RB unit address	Rotary SW setting	
	RB AD x10	RB AD x1
03	 0	 3
11	 1	 1
30	 3	 0
47	 4	 7

*Setting range 00 - 63(Arbitrary numbers can be set)

*Do not set RB unit address to the range of 64 from 99.

*Do not set the same address number to two or more RB units.

FUNCTION SETTING

● Touch panel controller setting (Set G)

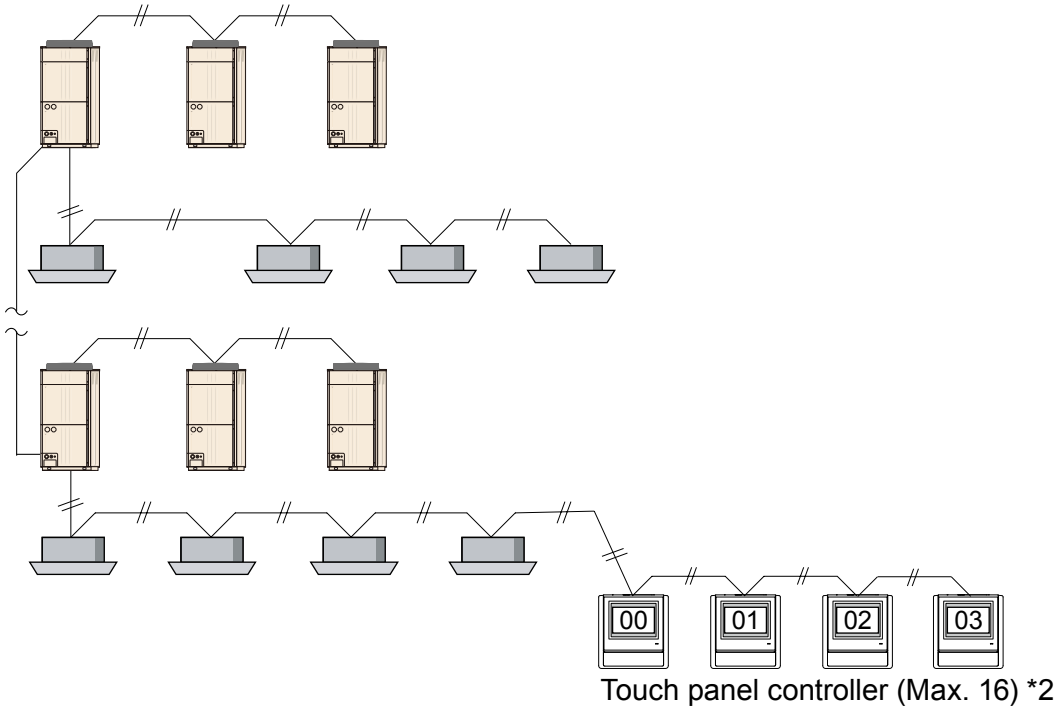

*1 : Set Touch panel controller address first, to conduct the initial setting of it.
Refer to the "setting manual" for details.

*2 : The sum total of the Touch panel controller, Central remote controller, Network convertor for Group remote controller and Network convertor for LONWORKS® is a maximum of 16.

● Network convertor setting (Set H)

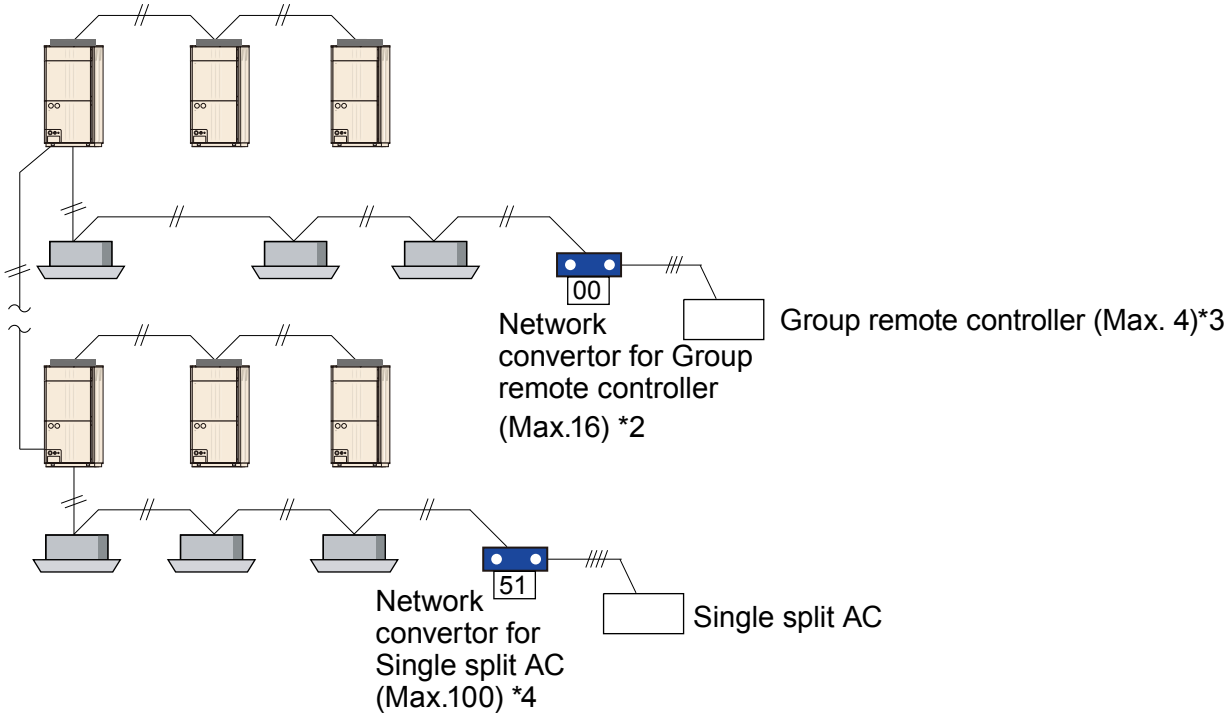

*1 : Set the Rotary SW 110 and SW 111 on network convertor PCB.

*2 : The sum total of the Touch panel controller, Central remote controller, Network convertor for Group remote controller and Network convertor for LONWORKS® is a maximum of 16.

*3 : Up to 64 Group remote controllers are able to connect with one VRF Network system.

*4 : When connecting the Network convertor for Single split AC , set up the number so that the Refrigerant circuit address number of outdoor unit and indoor unit does not overlap .
And the sum total of the Refrigerant circuit address of Network convertor for Single split AC and the Refrigerant circuit address of the outdoor unit and the indoor unit is a maximum of 100.

FUNCTION SETTING

● Group remote controller setting (Set I)

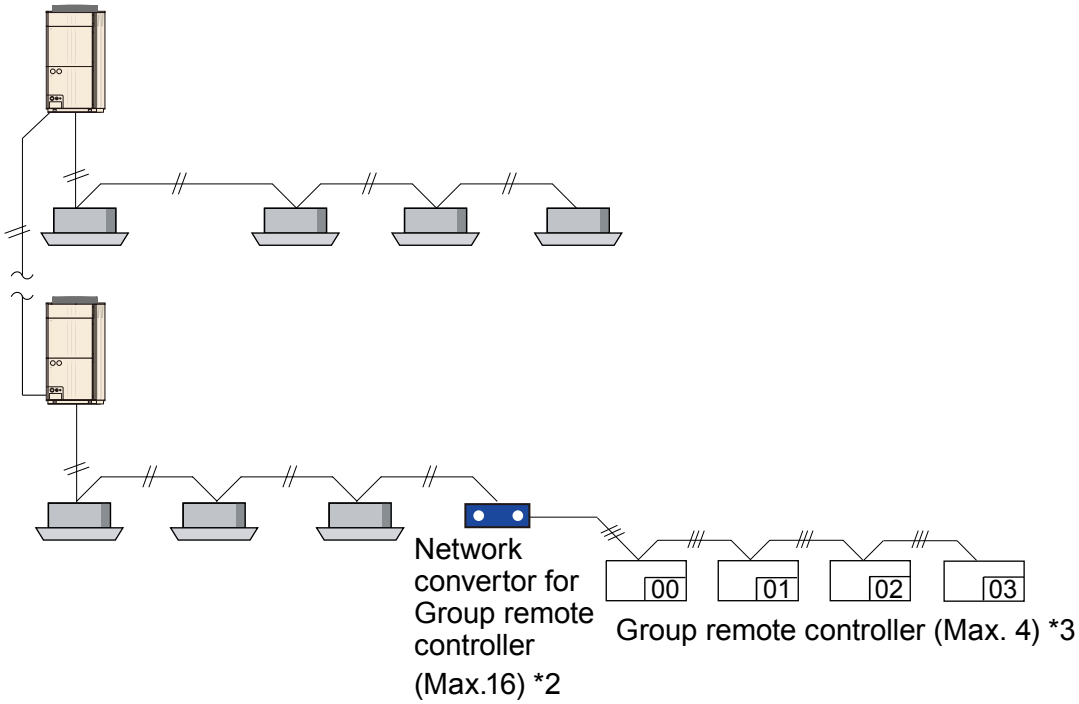

*1 : Set group remote controller address first, to conduct the initial setting of it.

*2 : The sum total of the Touch panel controller, Central remote controller, Network convertor for Group remote controller and Network convertor for LONWORKS® is a maximum of 16.

*3 : Up to 64 Group remote controllers are able to connect with one VRF Network system.

● Dual remote control switch (Set J)

When 2 wired remote controllers are connected to the remote control group, turn the SW 2 of DIP Switch 1 of Slave Remote Controller ON.

- Slave remote controller will not be valid for timer setting.
- Last command is priority.

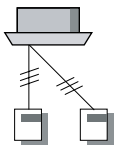

[Master] [Slave]
SW2 OFF ON
of DIP Switch 1

Remote controller unit PCB
Setting by SW 2 of DIP Switch 1

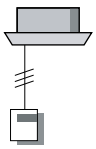

[Master]
SW2 OFF
of DIP Switch 1

When only 1 remote controller will connect, this SW 2 of DIP Switch 1 must be set OFF.

● Signal amplifier address (Set K)

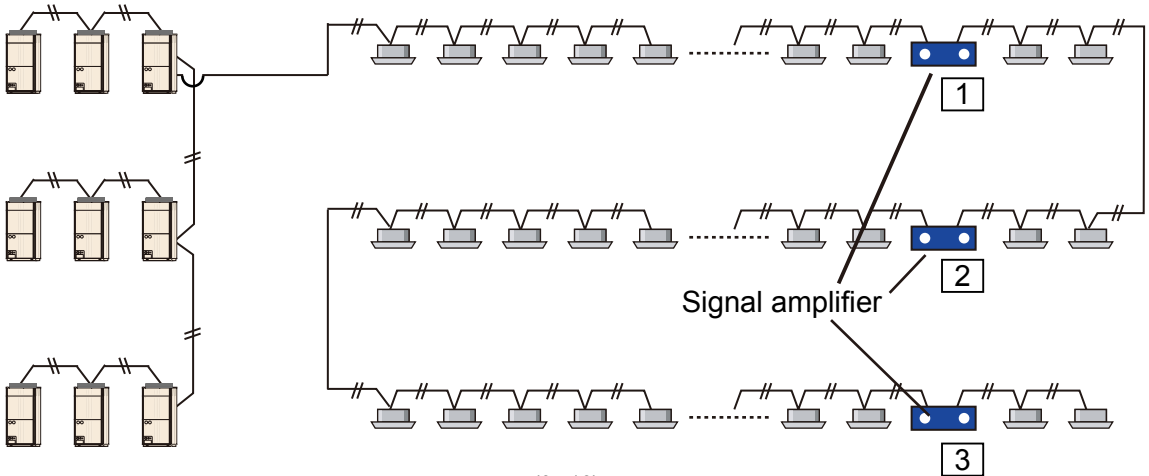

FUNCTION SETTING

● Network convertor for LonWorks® setting (Set M)

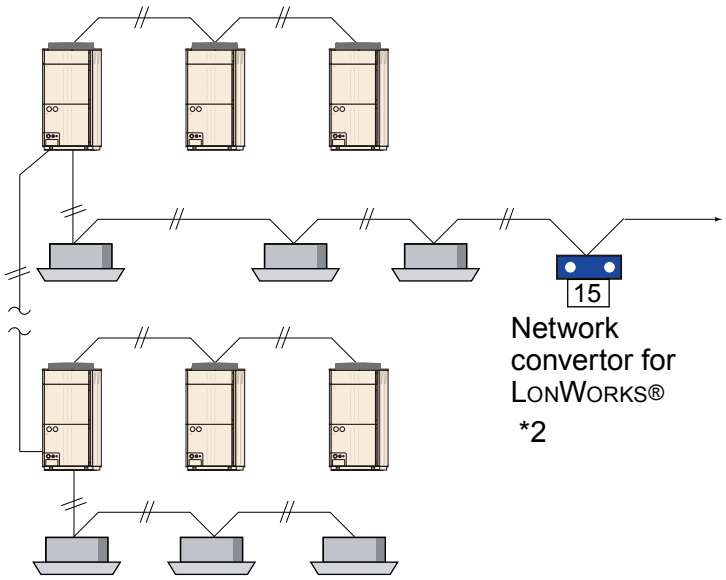

*1 : Setting up more than one Network Convertor in one VRF network system is prohibited.

*2 : The sum total of the Touch panel controller, Central remote controller, Network convertor for Group remote controller and Network convertor for LONWORKS® is a maximum of 16.

● Central remote controller setting (Set N)

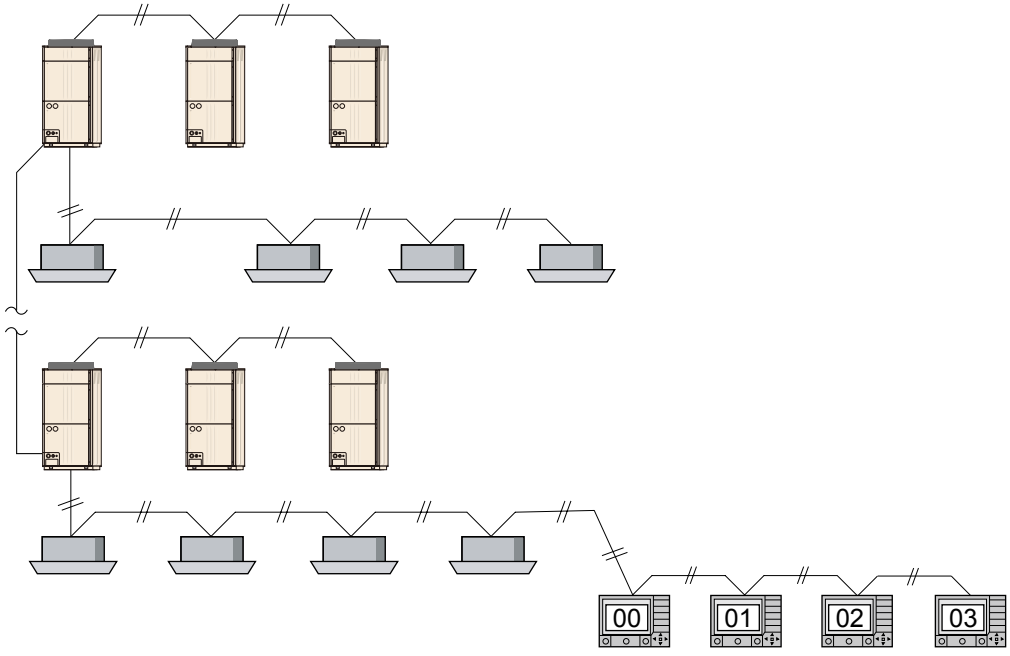

Central remote controller (Max. 16) *2

*1 : Set Central remote controller address first, to conduct the initial setting of it.
Refer to the "setting manual" for details.

*2 : The sum total of the Touch panel controller, Central remote controller, Network convertor for Group remote controller and Network convertor for LONWORKS® is a maximum of 16.

FUNCTION SETTING

1-4. ADDRESS SETTING BY REMOTE CONTROLLER

1-4-1. WIRELESS REMOTE CONTROLLER

- A wireless remote controller is required to set the infrared address setting.
- This function is available in all indoor unit with infrared signal receiver.
- Infrared address setting for duct type and cassette type models can be made possible by using the optional IR receiver unit.

  Note : Since Beeping sound generate from indoor unit PCB installed far away (not from IR Receiver unit), sound might not be heard.
- The indoor unit's refrigerant circuit address and indoor unit address can be set performing the infrared address setting.
- When remote controller address setting is required, set by the rotary switch on the indoor unit's PCB.

■ PREPARATION

(1) Set the switch on the indoor unit's PCB that is used for manual address setting is set to "00" at factory setting.

(This process is unnecessary for newly installed and not yet set the SW.)

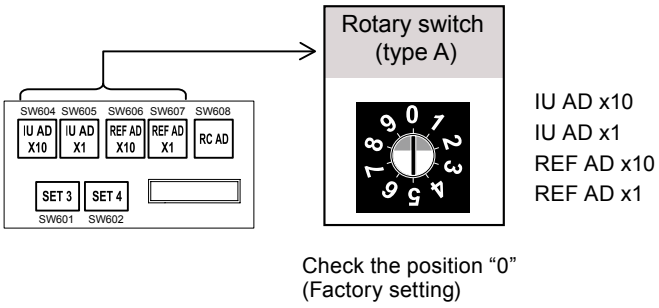

Check the position "0"
(Factory setting)

- If any of the switches is positioned at a value other than 0, this function will not activate.
- The layout of the switches differs depending on the type of the indoor unit. (Refer to 2-2.)

(2) Turn on the power to the indoor unit.

* By turning on the power indoor units initializes EEV, so make sure the piping air-tight test and vacuuming have been conducted before turning on the power.

* Also check again to make sure no wiring mistakes were made before turning on the power.

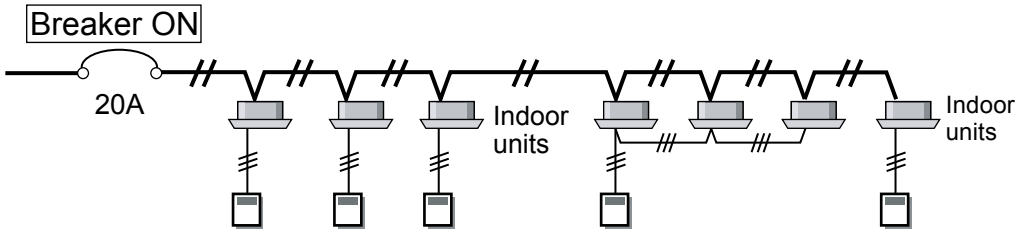

FUNCTION SETTING

FUNCTION SETTING

■ SWITCHING SELECTION OF ADDRESS SETTING MODE

(3) Press and hold the “MANUAL/AUTO” button for 3 seconds.

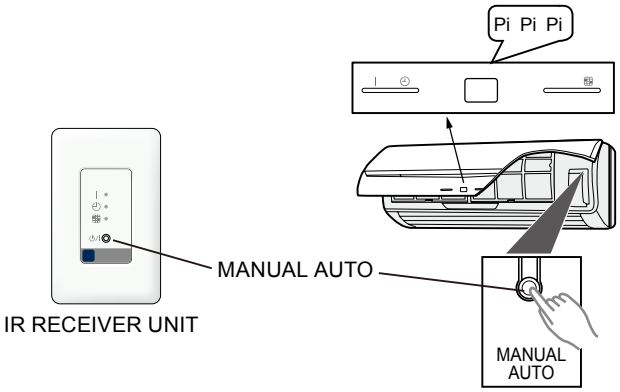

(4) Press and hold the “FAN” and the “ SET TEMP. ▲ ” buttons. Whilst holding these 2 buttons, press the "RESET" button.

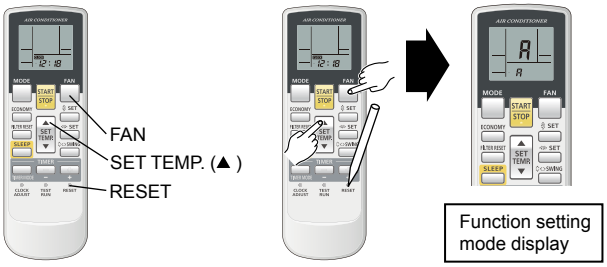

- The position of the “MANUAL/AUTO” button varies depending on the model. Refer to the operation manual for the position that is included with the unit.
- The error will be displayed by continuously pressing the "MANUAL/AUTO" for 10 sec or more. In this case release the button or turn off the power.
- An explanation of the displayed information as shown below.

■ SELECTION AND CONFIRMATION OF CUSTOM CODE

(5) Press the “ SET TEMP. ▲ ” or “ SET TEMP. ▼ ” buttons to select the custom code that matches the setting with the indoor unit.By selecting the appropriate custom code, the communication between the indoor unit and the wireless RC become possible.



The initial setting is "A"

(6) Press the “TIMER MODE" button to send the code to the indoor unit.

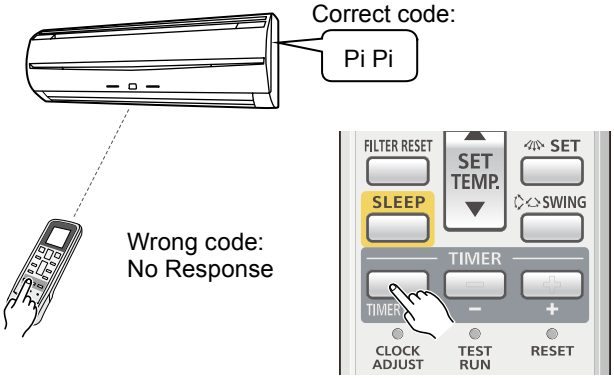

FUNCTION SETTING

FUNCTION SETTING

■ BUTTON NAME AND FUNCTION

- Refer to “1-2" for an outline of the address setting.
- It does not matter whether the refrigerant circuit address or indoor unit address is set first. (The method shown here sets the indoor unit address first.)
- During address setting mode, indoor unit reject the any operation command from remote controller.

Note : Address code display is as follows (operation lamp display)

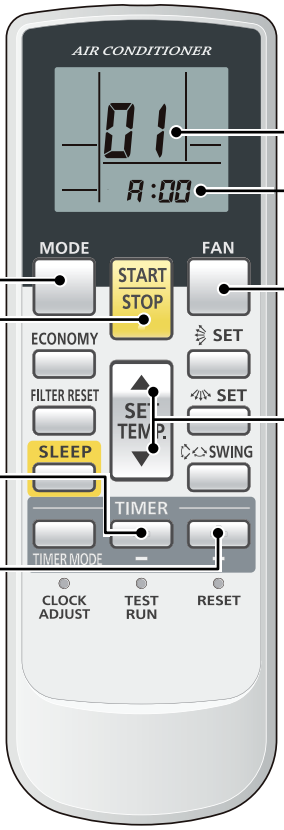

Function number

01 --- Indoor unit address

02 --- Refrigerant circuit address

MODE button

- Start the address setting mode
- Changes the address display digits

Setting number

Setting number

* Indoor unit address valid range 00-63
  Refrigerant circut address valid range 00-99

START/STOP button

Transmits address setting

FAN button

Switches between the setting number (bottom line) and function number (top line)

TIMER set (-) button

Reconfirmation of address setting.

SET TEMP. " ▲ " and " ▼ " button

Increases and decreases the displayed number

TIMER set (+) button

Confirmation of address setting.

IR RECEIVER UNIT

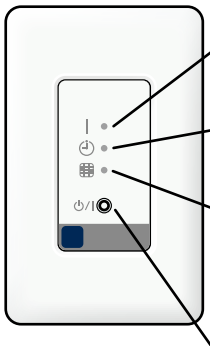

OPERATION LAMP

Indication of address code

TIMER LAMP

Indication of address data number (the ten’s place)

FILTER LAMP

Indication of address data number (the one’s place)

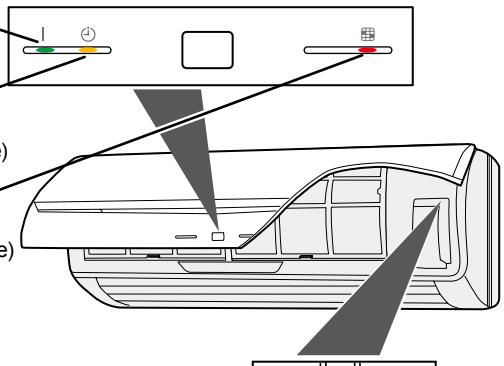

MANUAL/AUTO button

Long press (3 sec more) ----- Switches between the address setting mode and the address setting complete mode.

Short press ----- Switches the indicator display

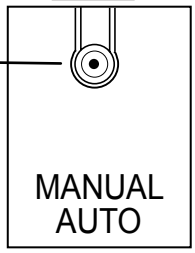

	INDOOR UNIT ADDRESS DISPLAY	REFRIGERANT CIRCUIT ADDRESS DISPLAY
OPERATION LAMP	ON / OFF (Light continuously)	ON / OFF (Light 1 sec ON / 1 sec OFF)

FUNCTION SETTING

■ ADDRESS SETTING

● INDOOR UNIT ADDRESS SETTING

(7) Press the “MODE” button to access the address setting mode.

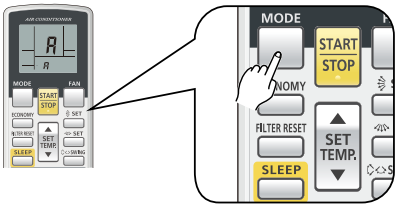

(8) Make sure the function number is ‘01’. If the number is other than ‘01’, press the “ ▲ ” or the “ ▼ ” buttons to alter.

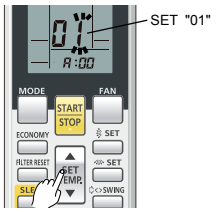

(9) Press the “FAN” button to access the address data setting mode. The address data will flash once this button is pressed.

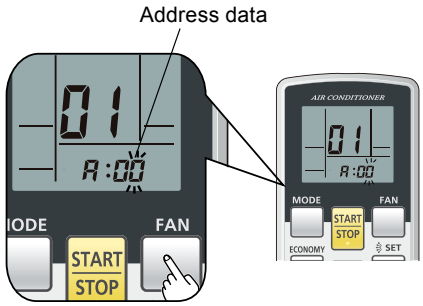

(10) Press the “ ▲ ” or the “ ▼ ” buttons to adjust the address data. The indoor unit address range is between 00 and 63.

Each time the “MODE” button is pressed, it switches between the one' place and the ten's place positions.

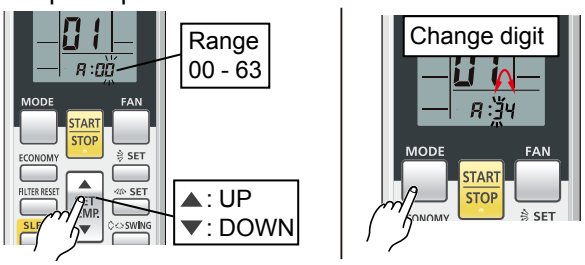

(11) Press the “START/STOP” button once to send the information. A beeping noise will be heard if the command is accepted.

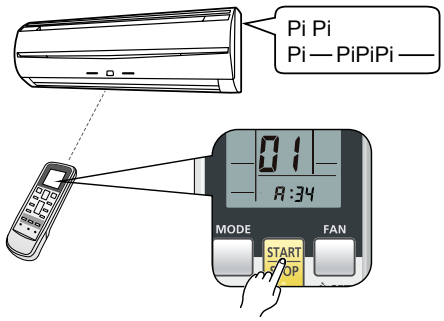

∗In the following cases the setting signal is not read and a buzzer sounds.

The indoor unit address No. is set out of range (64 or more) : Pi Pi Pi Pi Pi

The setting of the rotary switch on the PCB is not "00" : Pi Pi Pi Pi Pi

(12) Indoor unit will display the indoor unit address data number on "TIMER ◴ "(ORANGE) and "FILTER ▦ "(RED) light.

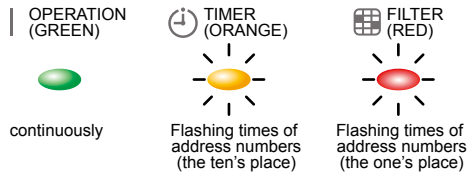

(Example) ADDRESS : 34

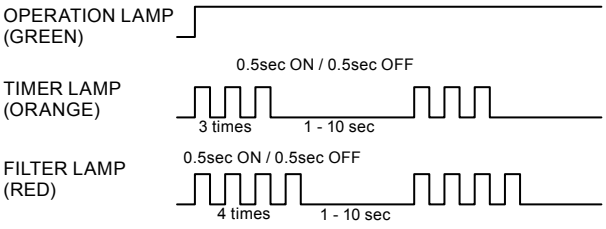

∗ ADDRESS 0 setting will not indicate TIMER LAMP and FILTER LAMP.

● Confirmation of address setting

(13) Press the “TIMER set (+)” button.

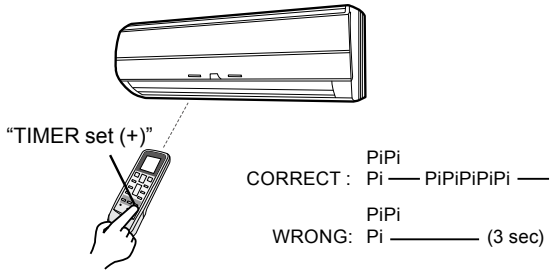

FUNCTION SETTING

● REFRIGERANT CIRCUIT ADDRESS SETTING

Note : The refrigerant circuit address is displayed when the following operations are performed even while indoor unit address is displayed on LED display of indoor unit.

(14) Press the “FAN” button to select the function number.

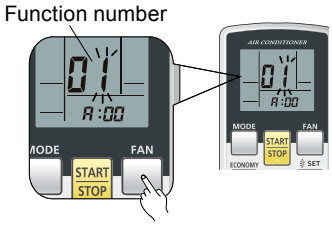

(15) Press the " ▲ " or the " ▼ " button to adjust function number 02.

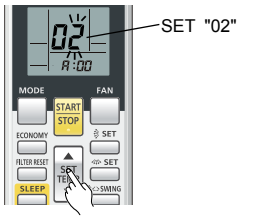

(16) Press the “FAN” button to access the address data setting mode. The address data will flash once this button is pressed.

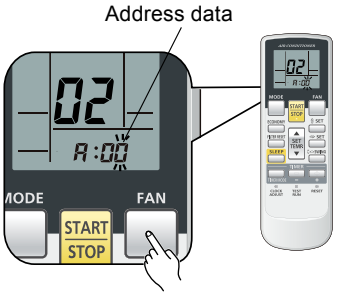

(17) Press the " ▲ " or the " ▼ " buttons to adjust the address data. The refrigerant circuit address range is between 00 and 99. Each time the "MODE" button is pressed, it switches between the one's place and the ten's place positions.

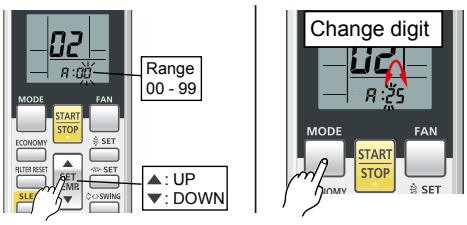

(18) Press the “START/STOP” button once to send the information. A beeping noise will be heard if the command is accepted.

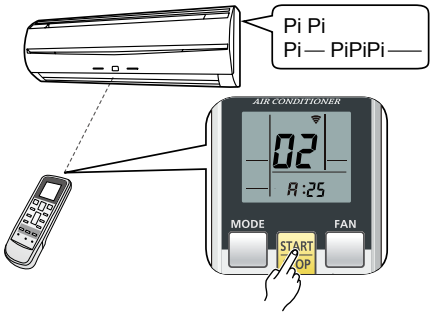

* In the following cases the setting signal is not read and a buzzer sounds.
  The setting of the rotary switch on the PCB is not "00" : Pi Pi Pi Pi Pi

(19) Indoor unit will display the refrigerant circuit address data number on "TIMER ◴ "(ORANGE) and "FILTER ▦ "(RED) light.

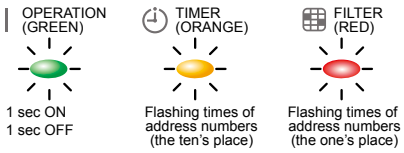

(Example) ADDRESS : 25

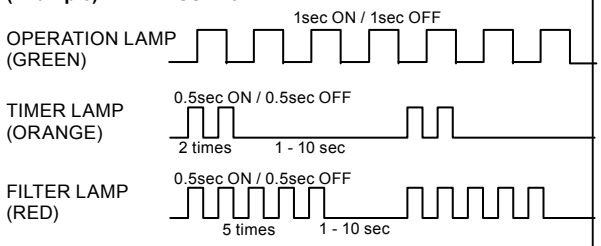

* ADDRESS 0 setting will not indicate TIMER LAMP and FILTER LAMP.
* ADDRESS display will automatically switched from indoor unit address to refrigerant circuit address.

● Confirmation of address setting

(20) Press the “TIMER set (+)” button.

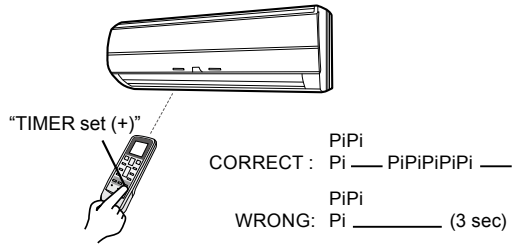

FUNCTION SETTING

FUNCTION SETTING

■ COMPLETION OF ADDRESS SETTING MODE

(21) Press and hold the “MANUAL/AUTO ⏽” button for 3 seconds.

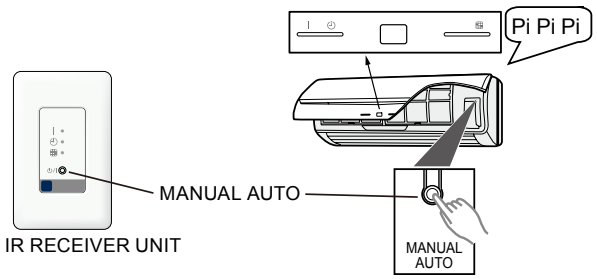

∗ Each LED light brightness is darkening though the content of the display doesn't change.

(22) Press the “RESET” button.

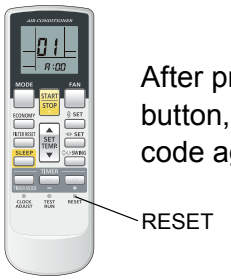

After pressing the RESET button, please set the custom code again if b,c,d setting.

∗ The address setting signal is not received after switched address setting completion mode. (Pi Pi Pi Pi Pi)
∗ Press the "MANUAL/AUTO ⏽" button again for 3 sec to return to if required to return the address setting mode.

■ RECONFIRMATION OF ADDRESS SETTING

(23) Press and hold the “FAN” and the “ SET TEMP. ▲ ” buttons. Whilst holding these 2 buttons, press the "RESET" button.

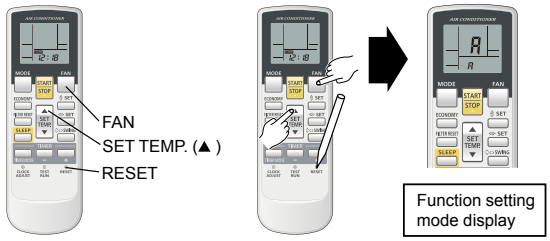

● INDOOR UNIT ADDRESS SETTING

(24) Make sure the function number is "01"
Refer to (8)
Press the “TIMER set (-)” button.

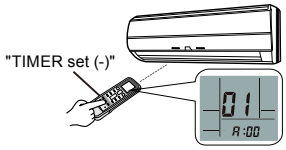

(Example) ADDRESS : 34

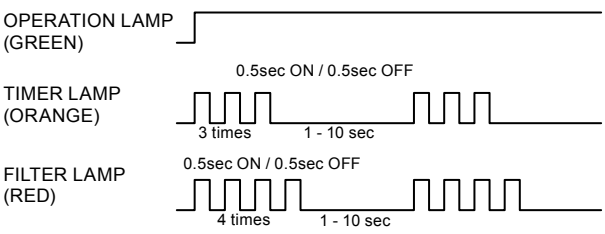

● REFRIGERANT CIRCUIT ADDRESS SETTING

(25) Make sure the function number is "02"
Refer to (15)
Press the “TIMER set (-)” button.

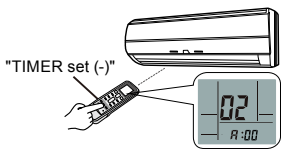

(Example) ADDRESS : 25

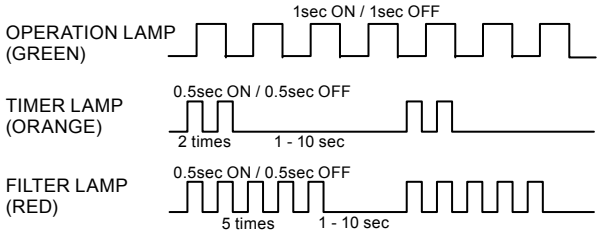

FUNCTION SETTING

FUNCTION SETTING

■ SETTING UP EACH INDOOR UNIT

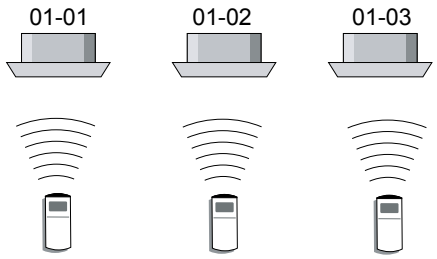

Repeat steps (1) through to (25). Steps (1) through to (6) and (21) to (25) only need to carried out if the custom code is different to the factory setting of “A”.

■ RESET THE POWER AFTER SETTING UP ADDRESS OF ALL INDOOR UNITS

Important

- **If the reset is not performed, address can not be read in normally.**
- **After all the addresses have been set, the circuit breaker needs to be switched off for at least 2 minutes.**

After the 2 minutes has passed, power can be restored.

- **The set address is stored in the PCB and will remain in memory even when the power is turned off.**

However setting address is effective after power reset.

Record the address set in the indoor unit on a label, etc., and affix the label to the unit so it can be used for after-sales service operations.

∗ Address 0 setting will not indicate TIMER LAMP and FILTER LAMP.

∗ Once the "RESET" button is pressed on the remote controller, the OPERATION MODE will be set in the "AUTO MODE".
Please adjust the OPERATION MODE to either "COOLING" or "HEATING" before trying to operate the air conditioner.

∗ Note : If CUSTOM CODE is set to anything other than "A" ,the remote control must be set accordingly to the INDOOR UNIT setting.

FUNCTION SETTING

1-4-2. WIRED REMOTE CONTROLLER

- Indoor unit addresses and refrigerant circuit addresses can be set up using wired remote controllers.
- This function allows setting the addresses of all indoor units to which a wired remote controller is being connected.
- This function cannot be used to set up remote controller addresses.
  Be sure to set them up using the rotary switches on the PCB of each indoor unit. (Refer to 1-3.)
- This function cannot be used on the slave units.

■ PREPARATION

1) Make sure that all indoor unit address switches (IU AD x10, IU AD x1) and refrigerant circuit address switches (REF AD x10, REF AD x1) on the PCB of each indoor unit are set at 0 (factory setting).

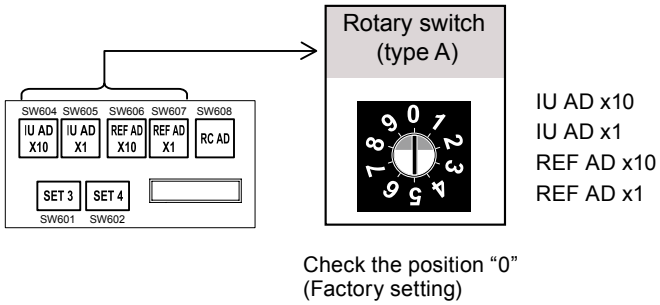

- If any of the switches is positioned at a value other than 0, this function will not activate.
- The layout of the switches differs depending on the type of the indoor unit. (Refer to 2-2.)

2) If multiple indoor units are connected to a single wired remote controller, make sure to manually set up the remote controller address (RC AD) on the PCBs of the indoor units. (Refer to 1-3.)
   Ex.) When four indoor units are connected

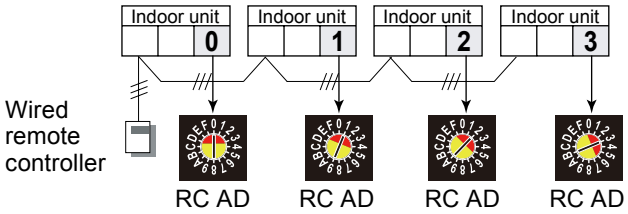

3) Turn on the power to the indoor unit.

- By turning on the power indoor units initializes EEV, so make sure the piping air-tight test and vacuuming have been conducted before turning on the power.
- Also check again to make sure no wiring mistakes were made before turning on the power.

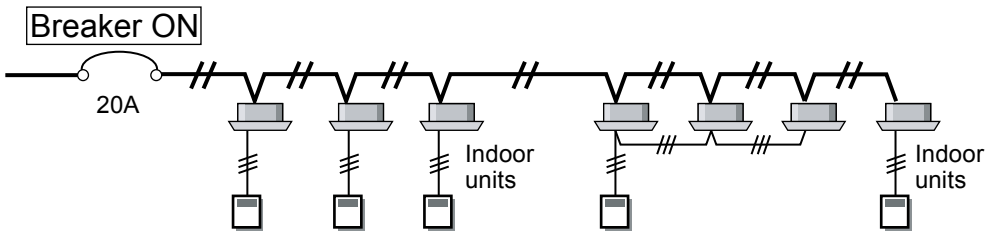

FUNCTION SETTING

FUNCTION SETTING

■ SWITCHING SELECTION OF ADDRESS SETTING MODE

4) To activate the address setting mode, hold down the three buttons of SET TEMP. V, SET TEMP. Λ and FAN at the same time for 5 seconds or longer.

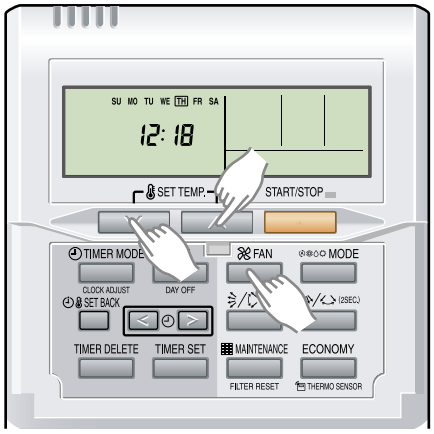

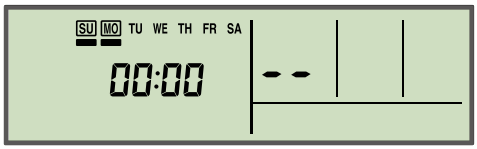

Address setting mode initial display

■ BUTTON NAME AND FUNCTION

- Refer to “1-2” for an outline of the address setting.
- It does not matter whether the refrigerant circuit address or indoor unit address is set first. (The method shown here sets the indoor unit address first.)
- During address setting mode, indoor unit reject the any operation command from remote controller.

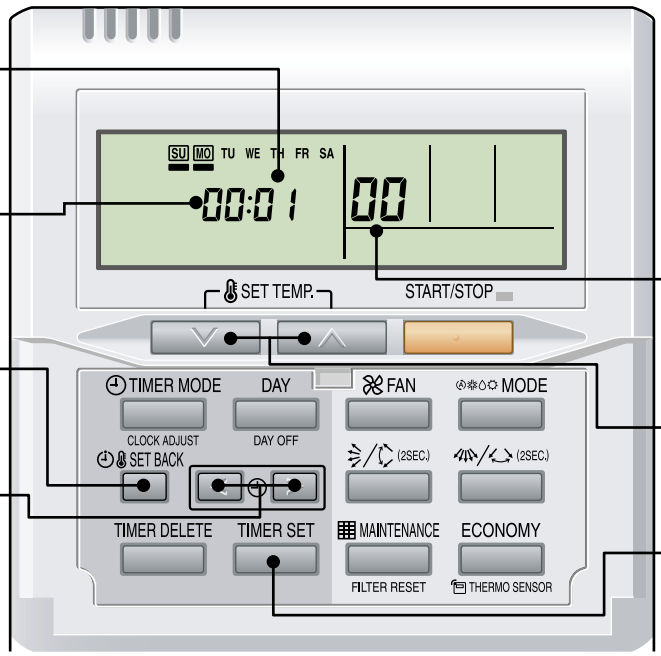

Function number

01---Indoor unit address

02---Refrigerant circuit address

Remote controller address

Remote controller address setting number 00-15

SET BACK button

Switches the remote controller address setting number.

SET TIME “<” and “>” button

Switches the function number.

Setting number

Setting number

- Indoor unit address valid range (
- Refrigerant circuit address valid 00-99

SET TEMP. “V” and “Λ” button

Switches the setting number.

TIMER SET button

Transmits address setting

FUNCTION SETTING

FUNCTION SETTING

■ ADDRESS SETTING

● Indoor unit address setting

5) Pressing the SET BACK button, select a remote controller address (select the indoor unit you want to operate).

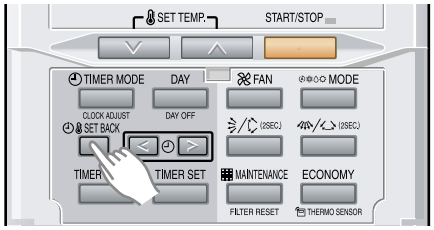

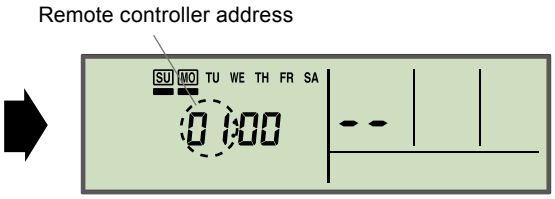

Ex.) When remote controller address “01” is selected

6) Pressing the SET TIME < button or the SET TIME > button, display function number 01.

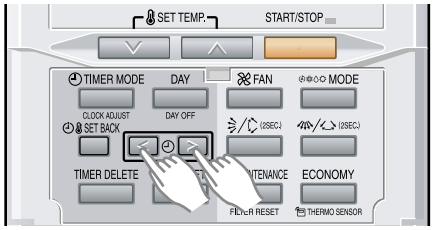

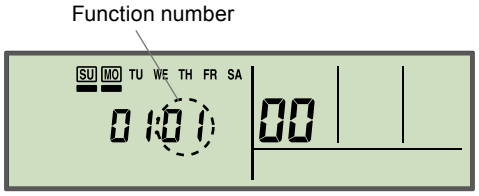

7) Pressing the SET TEMP. V button or the SET TEMP. Λ button, set up the indoor unit address. (The setting range is from 00 to 63.)

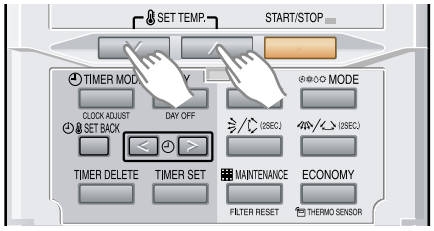

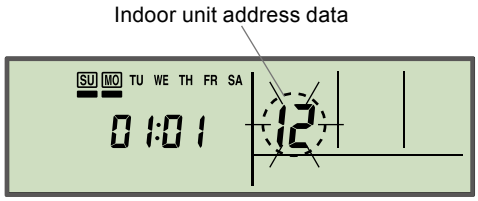

Ex.) When indoor unit address data “12” is set up

8) Pressing the TIMER SET button, confirm the selected indoor unit address data. (The data will be transferred to the indoor unit.)

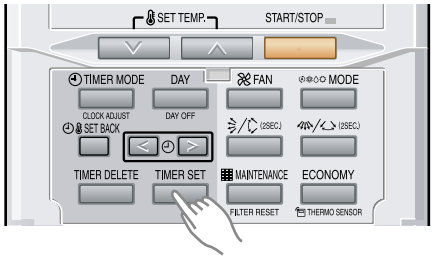

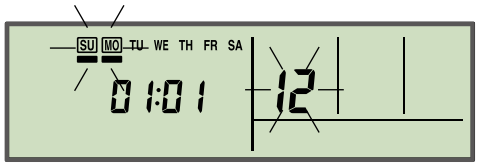

ERROR

GOOD

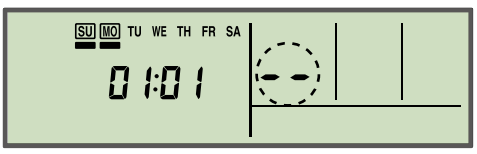

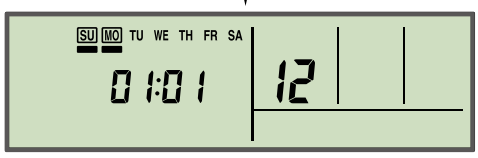

- When indoor unit address data was not set up on the indoor unit (-- is displayed.)
- Set up indoor unit address data again according to the procedure in step 7) above.

When indoor unit address data was normally set up on the indoor unit
(Flashing display changes to illuminated display.)

FUNCTION SETTING

FUNCTION SETTING

● Refrigerant circuit address setting

9) Pressing the SET BACK button, select a remote controller address (select the indoor unit you want to operate).

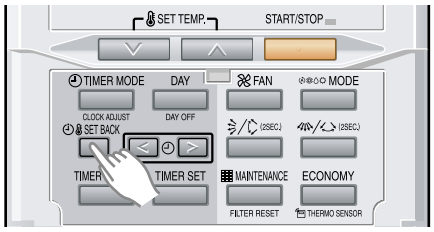



Ex.) When remote controller address “01” is selected

*If the indoor unit you want to operate has already been selected, skip step 9)

10) Pressing the SET TIME < button or the SET TIME > button, display function number 02.

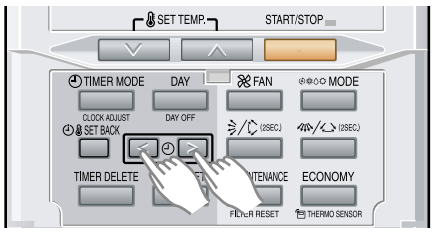

< : Down button
> : Up button

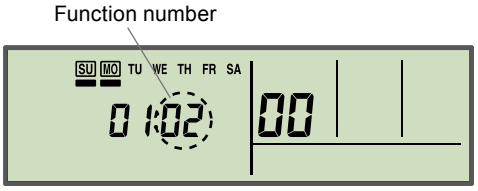

11) Pressing the SET TEMP. V button or the SET TEMP. Λ button, set up the refrigerant circuit address data. (The setting range is from 00 to 99.)

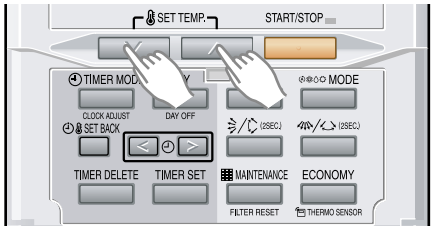

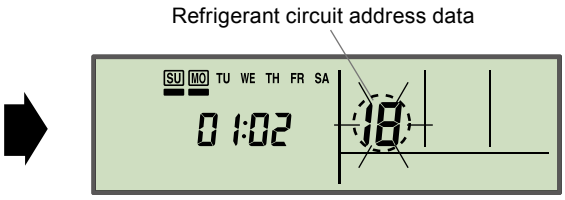

Ex.) When refrigerant circuit address data “18” is set up

12) Pressing the TIMER SET button, confirm the selected refrigerant circuit address data. (The data will be transferred to the indoor unit.)

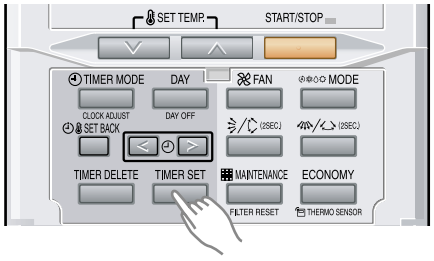

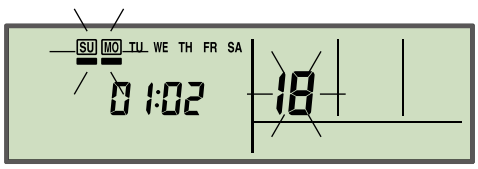

ERROR

GOOD

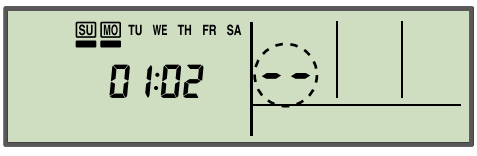

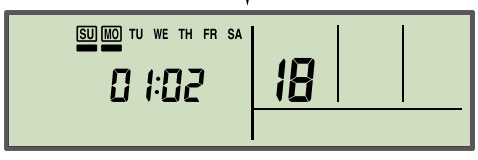

- When refrigerant circuit address data was not set up on the indoor unit (-- is displayed.)
- Set up refrigerant circuit address data again according to the procedure in step 11) above.

When refrigerant circuit address data was normally set up on the indoor unit (Flashing display changes to illuminated display.)

FUNCTION SETTING

FUNCTION SETTING

■ COMPLETION OF ADDRESS SETTING MODE

13) To clear the address setting mode and return to the regular display, hold down the three buttons of SET TEMP. V, SET TEMP. Λ and FAN at the same time.

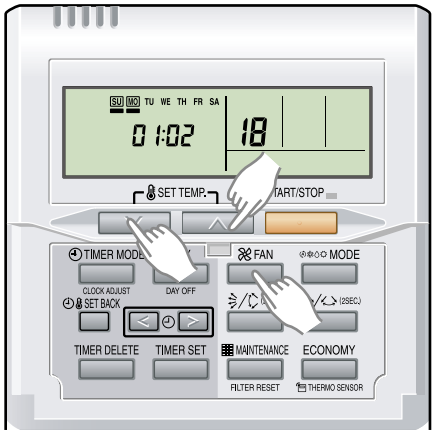

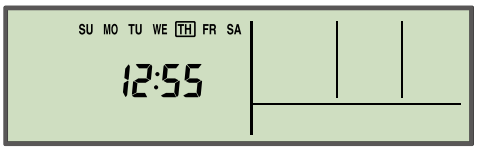

Normal mode display

∗ If no key entry is made for 60 seconds, even though none of the above buttons is pressed, the address setting mode will automatically be cleared.
(If the address setting mode is automatically cleared while setting addresses, activate the mode again according to the procedure in step 4) above.)

■ SETTING UP EACH INDOOR UNIT

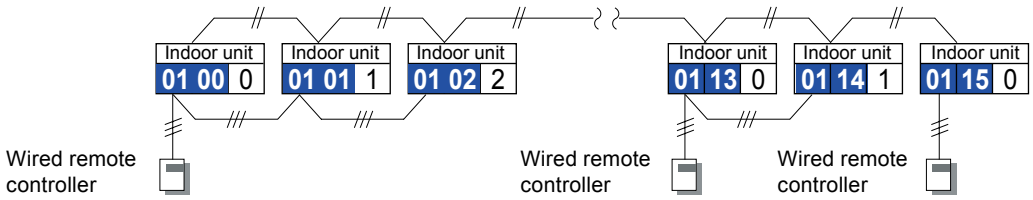

Repeat the procedures in steps 1) through 13), and set up the indoor units requiring address setting.

■ RESET THE POWER AFTER SETTING UP ADDRESS OF ALL INDOOR UNITS

Important

∗ If the reset is not performed, address can not be read in normally.
∗ After all the addresses have been set, the circuit breaker needs to be switched off for at least 2 minutes.
After the 2 minutes has passed, power can be restored.
∗ The set address is stored in the PCB and will remain in memory even when the power is turned off.
However setting address is effective after power reset.
Record the address set in the indoor unit on a label, etc., and affix the label to the unit so it can be used for after-sales service operations.

FUNCTION SETTING

1-4-3. SIMPLE REMOTE CONTROLLER

- Indoor unit addresses and refrigerant circuit addresses can be set up using simple remote controllers.
- This function allows setting the addresses of all indoor units to which a simple remote controller is being connected.
- This function cannot be used to set up remote controller addresses.
  Be sure to set them up using the rotary switches on the PCB of each indoor unit. (Refer to 1-3.)
- This function can be set up on both UTY-RSK*(With operation mode) and UTY-RHK*(Without operation mode) types.
- This function cannot be used on the slave units.

■ PREPARATION

1) Make sure that all indoor unit address switches (IU AD x10, IU AD x1) and refrigerant circuit address switches (REF AD x10, REF AD x1) on the PCB of each indoor unit are set at 0 (factory setting).

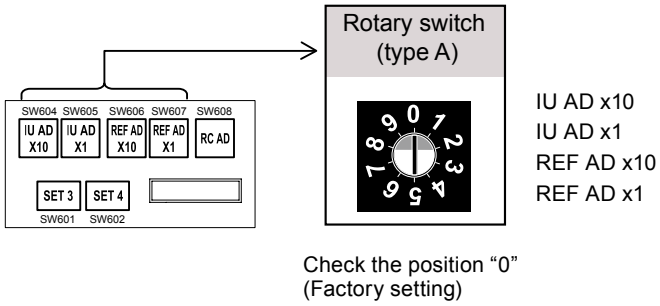

- If any of the switches is positioned at a value other than 0, this function will not activate.
- The layout of the switches differs depending on the type of the indoor unit. (Refer to 2-2.)

2) If multiple indoor units are connected to a single simple remote controller, make sure to manually set up the remote controller address (RC AD) on the PCBs of the indoor units. (Refer to 1-3.)
   Ex.) When four indoor units are connected

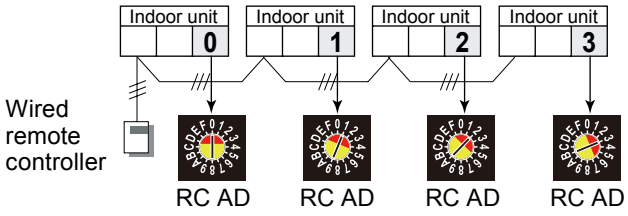

3) Turn on the power to the indoor unit.

- By turning on the power indoor units initializes EEV, so make sure the piping air-tight test and vacuuming have been conducted before turning on the power.
- Also check again to make sure no wiring mistakes were made before turning on the power.

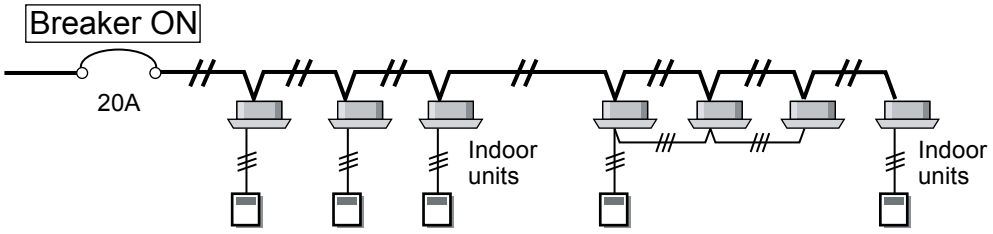

FUNCTION SETTING

FUNCTION SETTING

■ SWITCHING SELECTION OF ADDRESS SETTING MODE

4) To activate the address setting mode, hold down the three buttons of SET TEMP. ▼, SET TEMP. ▲ and FAN at the same time for 5 seconds or longer.

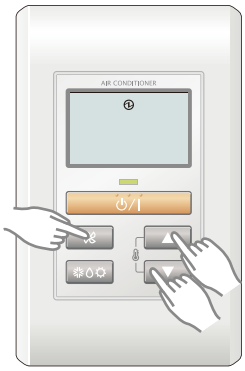

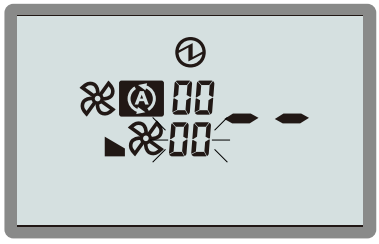

Address setting mode initial display

■ BUTTON NAME AND FUNCTION

- Refer to “1-2” for an outline of the address setting.
- It does not matter whether the refrigerant circuit address or indoor unit address is set first. (The method shown here sets the indoor unit address first.)
- During address setting mode, indoor unit reject the any operation command from remote controller.

Function number

01---Indoor unit address

02---Refrigerant circuit address

Remote controller address

Remote controller address setting number 00-15

FAN button

Each time this button is pressed, the fan setting changes among “Remote controller address,” “Function number” and “Setting number.”

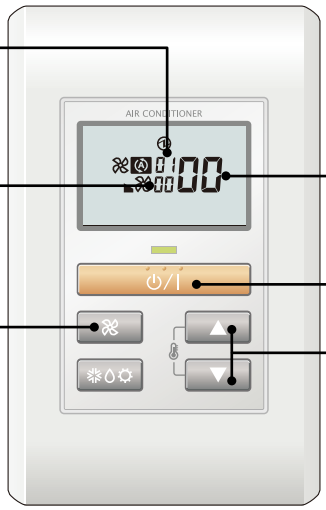

Setting number

Setting number

- Indoor unit address valid range 00-63
- Refrigerant circuit address valid range 00-99

START/STOP button

Transmits address setting

SET TEMP. “▲” and “▼” button

Switches the various numbers.

UTY-RSK* (With operation mode)

Function number

01---Indoor unit address

02---Refrigerant circuit address

Remote controller address

Remote controller address setting number 00-15

FAN button

Each time this button is pressed, the fan setting changes among “Remote controller address,” “Function number” and “Setting number.”

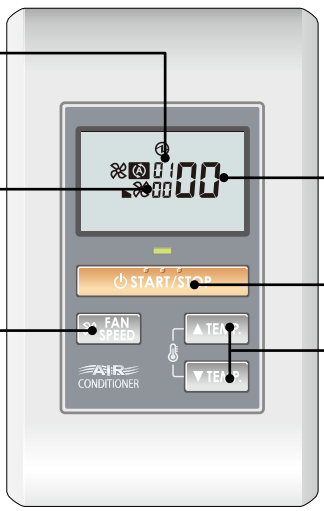

Setting number

Setting number

- Indoor unit address valid range 00-63
- Refrigerant circuit address valid range 00-99

START/STOP button

Transmits address setting

SET TEMP. “▲” and “▼” button

Switches the various numbers.

UTY-RHK* (Without operation mode)

FUNCTION SETTING

■ ADDRESS SETTING

● Indoor unit address setting

5) Pressing the SET TEMP. ▲ button or SET TEMP. ▼ button, select a remote controller address (select the indoor unit you want to operate).

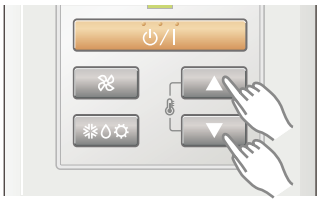

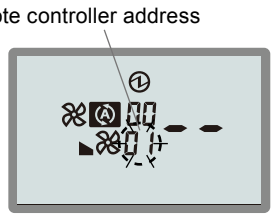

Ex.) When remote controller address “01” is selected

6) Press the FAN button so that the “Function number” display flashes. Then, press either the SET TEMP. ▲ button or the SET TEMP. ▼ button to display function number “01.”

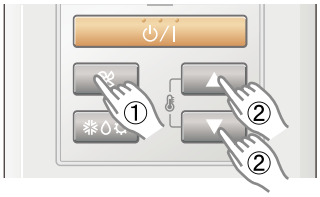

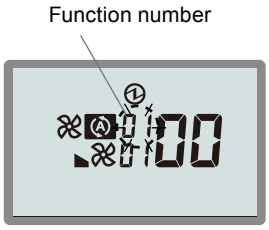

7) Press the FAN button so that the “Setting number” display flashes. Then, press either the SET TEMP. p button or the SET TEMP. q button to set up the indoor unit address data. (The setting range is from 00 to 63.)

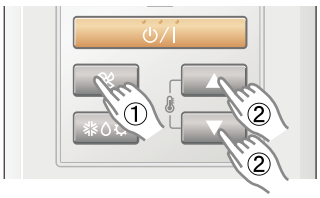

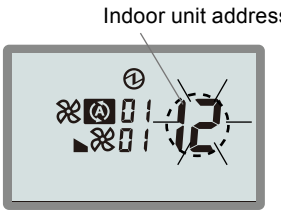

Ex.) When indoor unit address data “12” is set up

8) Pressing the START/STOP button, confirm the selected indoor unit address data. (The data will be transferred to the indoor unit.)





ERROR

GOOD

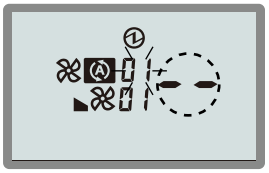



- When indoor unit address data was not set up on the indoor unit (-- is displayed.)
- Set up indoor unit address data again according to the procedure in step 7) above.

When indoor unit address data was normally set up on the indoor unit.

FUNCTION SETTING

● Refrigerant circuit address setting

9) Pressing the SET TEMP. ▲ button or SET TEMP. ▼ button, select a remote controller address (select the indoor unit you want to operate).



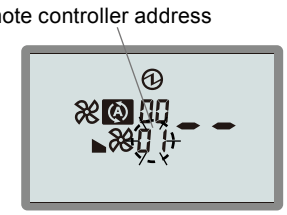

Ex.) When remote controller address “01” is selected

*If the indoor unit you want to operate has already been selected, skip step 9).

10) Press the FAN button so that the “Function number” display flashes. Then, press either the SET TEMP. ▲ button or the SET TEMP. ▼ button to display function number “02.”

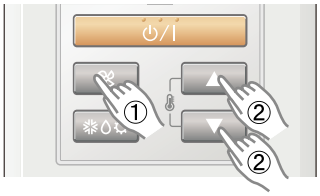

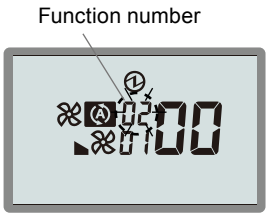

11) Press the FAN button so that the “Setting number” display flashes. Then, press either the SET TEMP. ▲ button or the SET TEMP. ▼ button to set up the refrigerant circuit address data. (The setting range is from 00 to 99.)

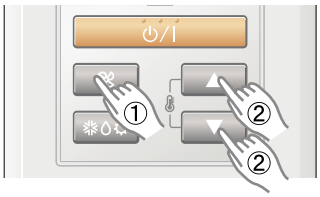

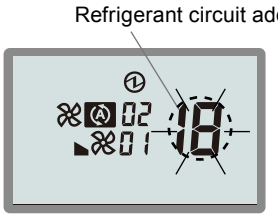

Ex.) When refrigerant circuit address data “18” is set up

12) Pressing the START/STOP button, confirm the selected refrigerant circuit address data. (The data will be transferred to the indoor unit.)



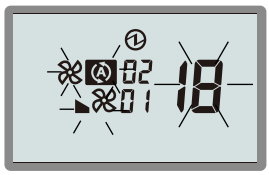

ERROR

GOOD

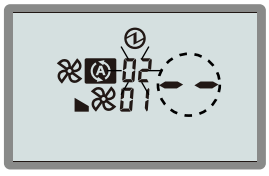

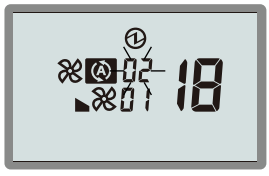

- When refrigerant circuit address data was not set up on the indoor unit (-- is displayed.)
- Set up refrigerant circuit address data again according to the procedure in step 11) above.

When refrigerant circuit address data was normally set up on the indoor unit.

FUNCTION SETTING

FUNCTION SETTING

■ COMPLETION OF ADDRESS SETTING MODE

13) Press the three buttons of SET TEMP. ▲, SET TEMP. ▼ and FAN at the same time for 5 seconds or longer. The address setting mode will be cleared and the regular display will be restored.

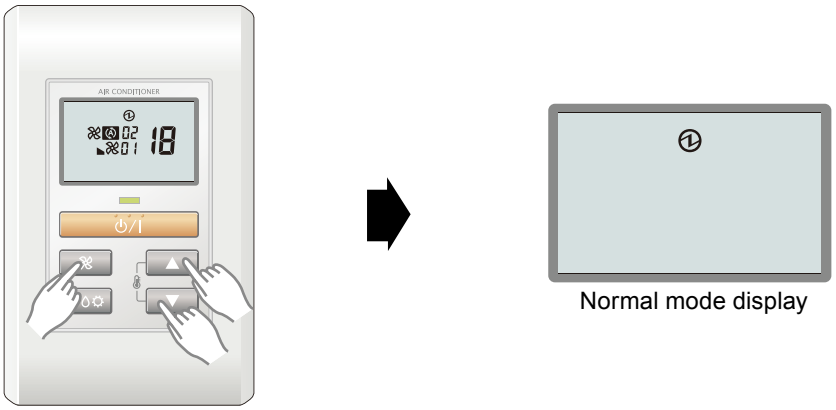

∗ If no key entry is made for 60 seconds, even though none of the above buttons is pressed, the address setting mode will automatically be cleared.
(If the address setting mode is automatically cleared while setting addresses, activate the mode again according to the procedure in step 4) above.)

■ SETTING UP EACH INDOOR UNIT

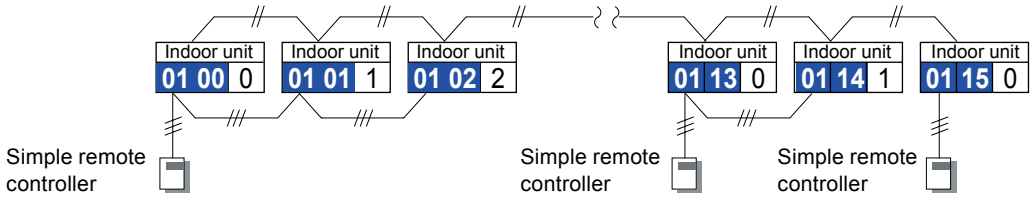

Repeat the procedures in steps 1) through 13), and set up the indoor units requiring address setting.

■ RESET THE POWER AFTER SETTING UP ADDRESS OF ALL INDOOR UNITS

Important

∗ If the reset is not performed, address can not be read in normally.
∗ After all the addresses have been set, the circuit breaker needs to be switched off for at least 2 minutes.
After the 2 minutes has passed, power can be restored.
∗ The set address is stored in the PCB and will remain in memory even when the power is turned off.
However setting address is effective after power reset.
Record the address set in the indoor unit on a label, etc., and affix the label to the unit so it can be used for after-sales service operations.

FUNCTION SETTING

1-4-4. WIRED REMOTE CONTROLLER (Touch panel)

- Indoor unit addresses and refrigerant circuit addresses can be set up using wired remote controllers.
- This function allows setting the addresses of all indoor units to which a wired remote controller is being connected.
- This function cannot be used to set up remote controller addresses.
  When setting of Remote controller address in "Manual address setting" , Be sure to set them up using the rotary switches on the PCB of each indoor unit. (Refer to 1-3.)
- This function cannot be used on the slave units.

■ PREPARATION

1) Make sure that all indoor unit address switches (IU AD x10, IU AD x1) and refrigerant circuit address switches (REF AD x10, REF AD x1) on the PCB of each indoor unit are set at 0 (factory setting).

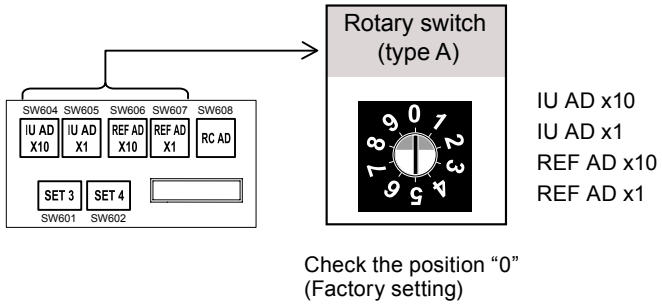

- If any of the switches is positioned at a value other than 0, this function will not activate.
- The layout of the switches differs depending on the type of the indoor unit. (Refer to 2-2.)

2) When multiple indoor units are connected to a single wired remote controller.

2-1) When setting of Remote controller address in "Automatic address setting"

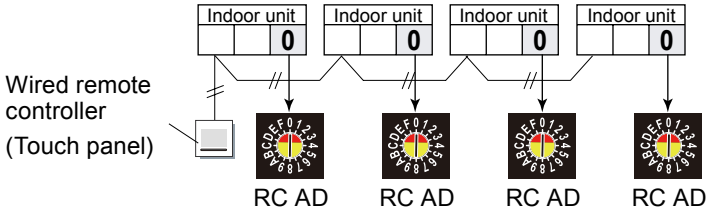

2-2) When setting of Remote controller address in "Manual address setting", make sure to manually set up the remote controller address (RC AD) on the PCBs of the indoor units and Wired remote controller (Touch panel). (Refer to 1-3.)

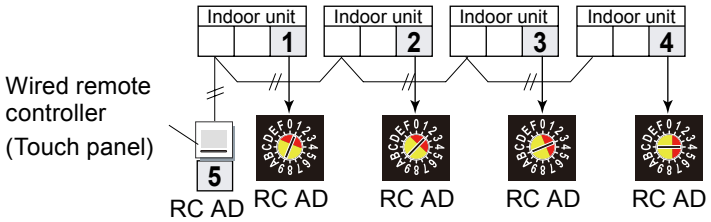

FUNCTION SETTING

FUNCTION SETTING

■ PREPARATION

3) Turn on the power to the indoor unit.

- By turning on the power indoor units initializes EEV, so make sure the piping air-tight test and vacuuming have been conducted before turning on the power.
- Also check again to make sure no wiring mistakes were made before turning on the power.

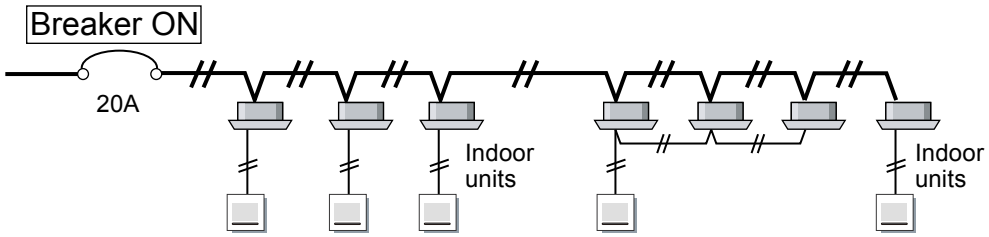

■ SWITCHING SELECTION OF ADDRESS SETTING MODE

4) When the [Function Setting] on the “Maintenance” screen is touched, the “Installer Password Verification” screen is displayed.
Enter the Installer Password, and touch the [OK]. “Function Setting” screen is displayed.

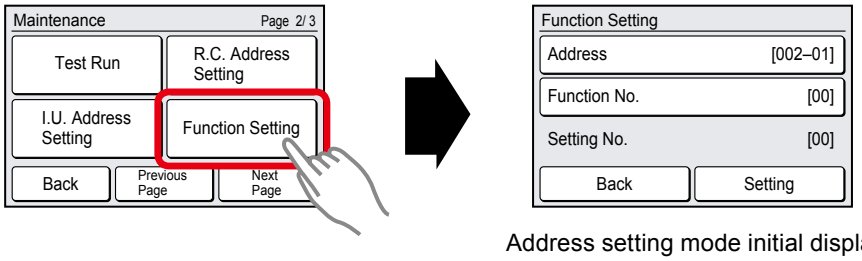

Address setting mode initial display

FUNCTION SETTING

■ ADDRESS SETTING

● Indoor unit address setting

5) Touch the [Address] on the “Function Setting” screen.

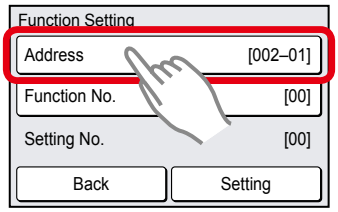

6) “Address” screen is displayed. Select the address of the indoor unit whose function number is to be set by touching [▲] or [▼].

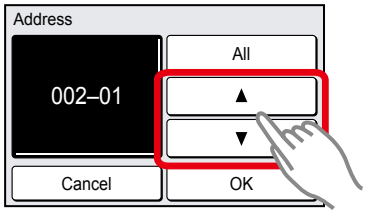

When the [OK] is touched, the display returns to the “Function Setting” screen.

7) Touch the [Function No.] on the “Function Setting” screen.

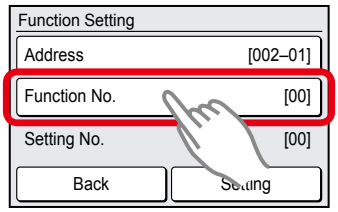

8) “Function No.” screen is displayed. Set the Function No"01". with the [▲] or [▼].

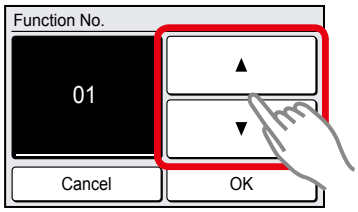

When the [OK] is touched, the display returns to the “Function Setting” screen.

9) Touch the [Setting] on the “Function Setting” screen.

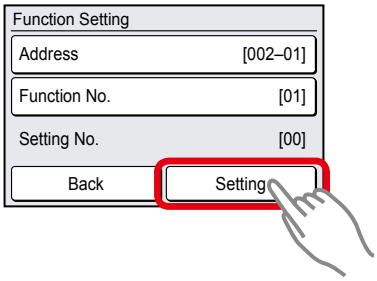

10) Setting screen of “Setting No.” is displayed. Set the Setting No. with the [▲] or [▼]. (The setting range is from 00 to 63.)

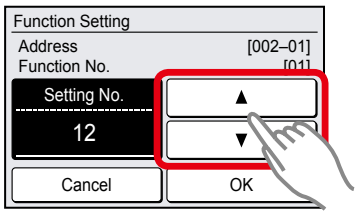

Ex.) When indoor unit address data "12" is set up
When the [OK] is touched, the “Function Setting” verification screen is displayed.

11) Touch the [YES] of the verification screen.

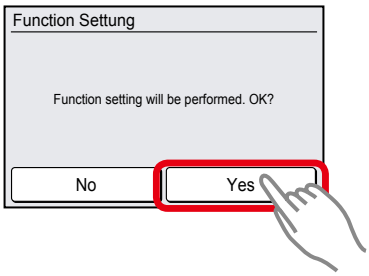

After the “Setting” screen was displayed, the display returns to the “Function Setting” screen.

FUNCTION SETTING

FUNCTION SETTING

● Refrigerant circuit address setting

12) Touch the [Address] on the “Function Setting” screen.

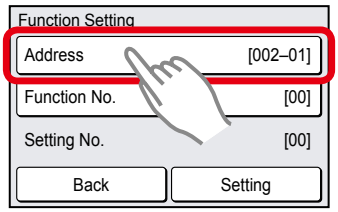

13) “Address” screen is displayed. Select the address of the indoor unit whose function number is to be set by touching [▲] or [▼]. When setting at all the indoor units, touch [All].

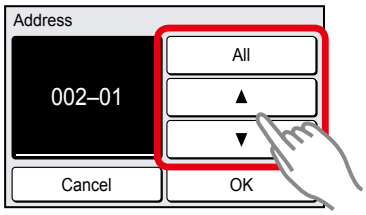

When the [OK] is touched, the display returns to the “Function Setting” screen.

14) Touch the [Function No.] on the “Function Setting” screen.

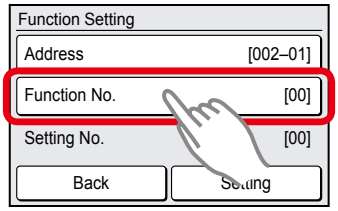

15) “Function No.” screen is displayed. Set the Function No"02". with the [▲] or [▼].

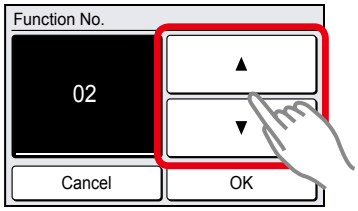

When the [OK] is touched, the display returns to the “Function Setting” screen.

16)Touch the [Setting] on the “Function Setting” screen.

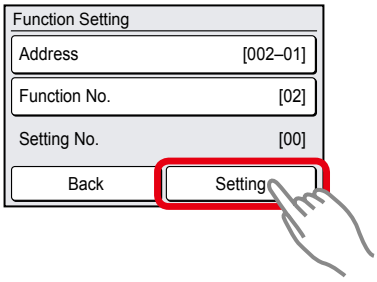

17) Setting screen of “Setting No.” is displayed. Set the Setting No. with the [▲] or [▼]. (The setting range is from 00 to 99.)

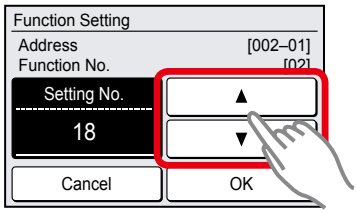

Ex.) When refrigerant circuit address data "18" is set up
When the [OK] is touched, the “Function Setting” verification screen is displayed.

18) Touch the [YES] of the verification screen.

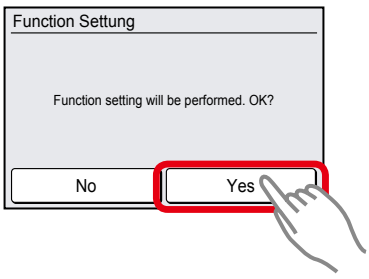

After the “Setting” screen was displayed, the display returns to the “Function Setting” screen.

FUNCTION SETTING

■ COMPLETION OF ADDRESS SETTING MODE

19) When the [Back] on the “Function Setting” screen is touched, the display returns to the “Maintenance” screen.

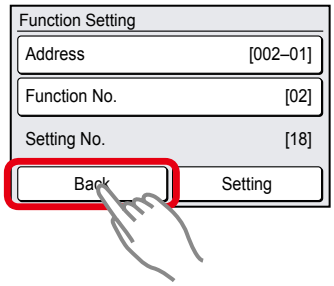

■ SETTING UP EACH INDOOR UNIT

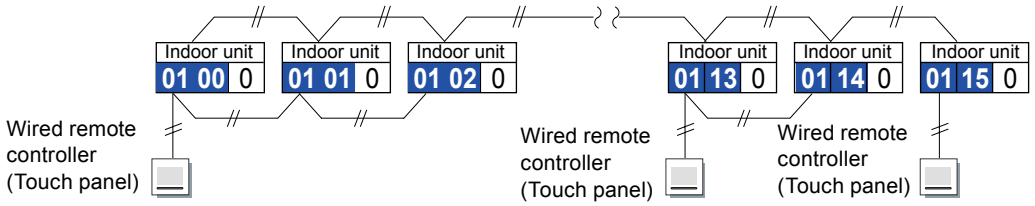

Repeat the procedures in steps 1) through 19), and set up the indoor units requiring address setting.

■ RESET THE POWER AFTER SETTING UP ADDRESS OF ALL INDOOR UNITS

Important

∗ If the reset is not performed, address can not be read in normally.
∗ After all the addresses have been set, the circuit breaker needs to be switched off for at least 2 minutes.
After the 2 minutes has passed, power can be restored.
∗ The set address is stored in the PCB and will remain in memory even when the power is turned off.
However setting address is effective after power reset.
Record the address set in the indoor unit on a label, etc., and affix the label to the unit so it can be used for after-sales service operations.

FUNCTION SETTING

1-5. AUTOMATIC ADDRESS SETTING

The addresses of signal amplifiers, indoor units and RB units can be set automatically.

⚠Caution
Following are cautions when performing AUTOMATIC ADDRESS SETTING. 1.The Controller cannot be used. 2.AUTOMATIC ADDRESS SETTING may take about 30 minutes. 3.Emergency stop signal is not accepted. Refer to Chapter 8. EXTERNAL INPUT & OUTPUT for design related to emergency stop.
When setting addresses of signal amplifiers, indoor units and RB units automatically, be sure to always set the addresses of signal amplifiers first, set the addresses of indoor units second, set the addresses of RB units last.

■ AUTOMATIC ADDRESS SETTING METHOD

<Step 1>

Manual setting of Outdoor unit

Please set up 1-3 (Set A, Set B, Set C, Set L) and 1-8(terminal resister setting)

<Step 2>

Turn Power ON of all units

<Step 3>

Automatic address setting of Signal Amplifier (1-5-1)

<Step 4>

Automatic address setting of Indoor unit (1-5-2)

<Step 5>

Automatic address setting of RB unit (1-5-3)

This function is available VR-II series

Note: Please do not change an order of step1 to step5.

FUNCTION SETTING

■ SWITCH POSITION

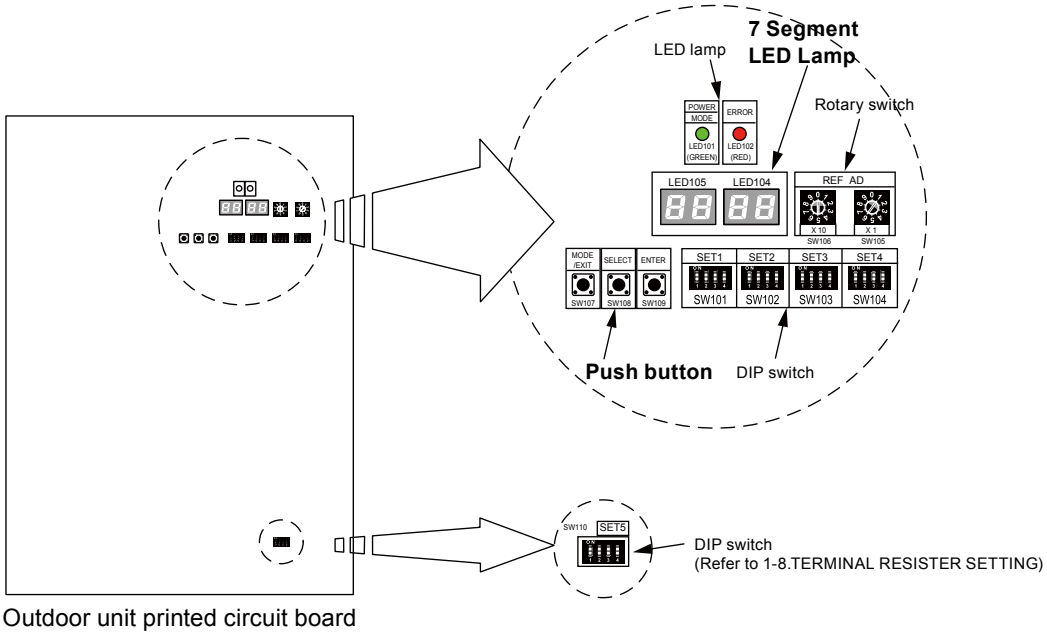

Switch position differs depending on outdoor unit.

- Set the functions of an outdoor unit with the push buttons (SW107, SW108 and SW109) while observing the 7-segment LED lamps (LED105 and LED104) on the printed circuit board.

■ PREPARATION

1) Be sure to check that the operation of the outdoor unit has stopped (be sure to stop the operation if it is still running), and turn off the power.
2) Remove the front panel of the outdoor unit, and remove the lid of the electrical component box in order to expose the printed circuit board.
3) Turn on the power of the outdoor unit.

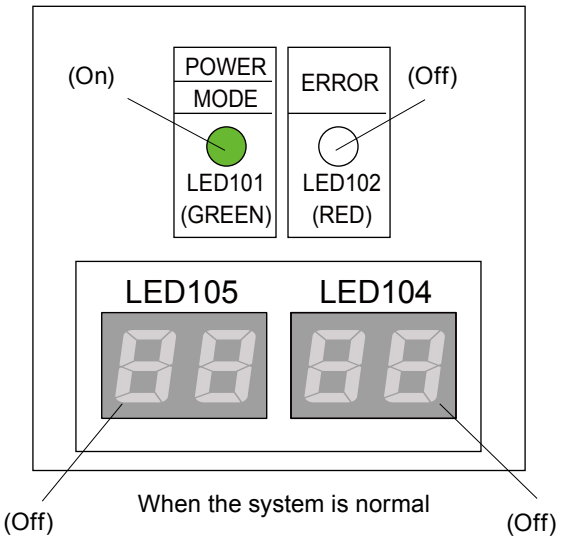

- As shown in the above figure, make sure that the POWER/MODE indicator lamp (LED101) is on and the ERROR indicator lamp (LED102) is off.
- If the ERROR indicator lamp (LED102) flashes, it indicates that an error has occurred. Check wiring and power supply. After making sure that the ERROR indicator lamp (LED102) has turned off, proceed to the next step.

FUNCTION SETTING

1-5-1. SIGNAL AMPLIFIER AUTOMATIC ADDRESS SETTING

⚠Caution

- The Signal Amplifier Automatic Address Setting function can be used for a maximum of 40 signal amplifiers installed within the same network.
- Perform the automatic address setting of signal amplifiers on only one outdoor unit (master unit) within the same network. (Do not set them again from other outdoor unit.)
- When setting the address of a signal amplifier automatically, be sure to always set the address on the printed circuit board of the Signal amplifier to “1”(factory setting).
- Please perform automatic address setting after checking that filter mode setting of Signal amplifier is completed.

1) After verifying that the system is normally, press the MODE/EXIT button (SW107) once.

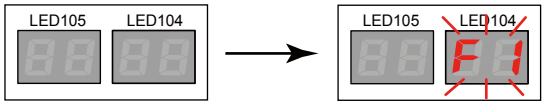

2) Press the SELECT button (SW108) to display “F3” on the LED104.

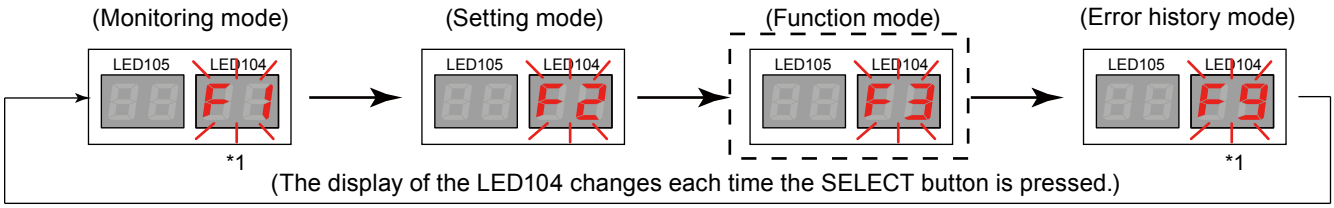

*1 : The “F1” and “F9” modes are used for maintenance, so do not set them in regular

3) When “F3” appears on the LED104, press the ENTER button (SW109).

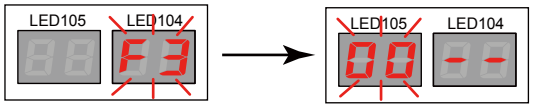

A flashing display appears on the LED105.

4) Press the SELECT button (SW108) to display “10” on the LED105.



5) When “10” appears on the LED105, hold down the ENTER button (SW109) for at least 3 seconds. (Unless it is held down for at least 3 seconds, the selection will not be confirmed.)



When the Automatic Address Setting function is activated, the display changes to “run.”

FUNCTION SETTING

FUNCTION SETTING

6) When automatic address setting is completed, the number of signal amplifier is displayed on the LED104. Verify that the count matches the number of signal amplifiers being installed.



Ex.) When eight signal amplifiers are being connected

7) To exit automatic address setting, press the ENTER button (SW109) in the setting completed status shown in step 6) above.

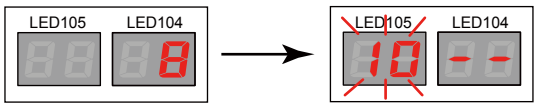

Next, press the MODE/EXIT button (SW107) to exit the Function mode.

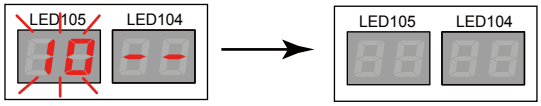

FUNCTION SETTING

1-5-2. INDOOR UNIT AUTOMATIC ADDRESS SETTING

⚠Caution

- The Indoor Unit Automatic Address Setting function can be used for a maximum of 64 indoor units installed within the same refrigerant system.
- The Indoor Unit Automatic Address Setting function cannot be used for indoor units being connected to other refrigerant systems via the network.
  (Refer to "■transmission wiring flow" in "Chapter 6. 4-3. transmission line.")
- When setting addresses automatically, be sure to position "IU AD x10" (SW6), "IU AD x1" (SW7), "REF AD x10" (SW8) and "REF AD x1" (SW9) at 0 (Factory setting).
- When an indoor unit address is set up, a refrigerant circuit address is also set up at the same time. (The refrigerant circuit address of an outdoor unit being connected within the same refrigerant system is set up.)

1) After verifying that the system is operating normally, press the MODE/EXIT button (SW107) once.

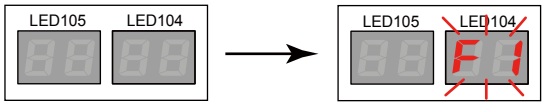

2) Press the SELECT button (SW108) to display "F3" on the LED104.

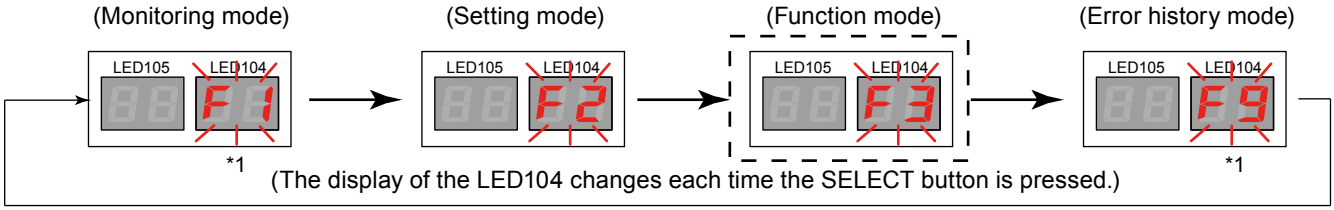

*1 : The "F1" and "F9" modes are used for maintenance, so do not set them in regular

3) When "F3" appears on the LED104, press the ENTER button (SW109).

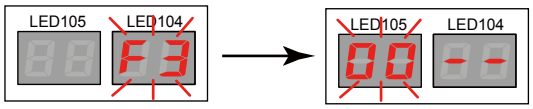

A flashing display appears on the LED105.

4) Press the SELECT button (SW108) to display "11" on the LED105.

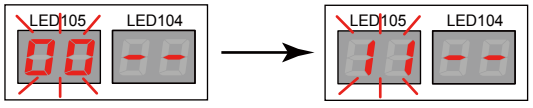

FUNCTION SETTING

5) When “11” appears on the LED105, hold down the ENTER button (SW109) for at least 3 seconds.(Unless it is held down for at least 3 seconds, the selection will not be confirmed.)



When the Automatic Address Setting function is activated, the display changes to “run.”

6) When automatic address setting is completed, the number of indoor units of which automatic address setting succeeded is displayed on the LED105, and the number of indoor units of which automatic address setting failed is displayed on the LED104.
Ex.) When 25 indoor units are connected, and the automatic setting of the addresses of all indoor units ended normally

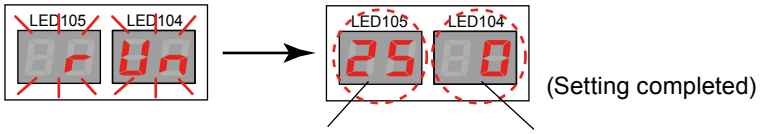

LED105: The number of indoor units of which automatic address setting succeeded

LED104: The number of indoor units of which automatic address setting failed

Ex.) When 25 indoor units are connected, and the automatic setting of the addresses of three indoor units failed

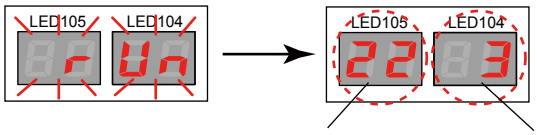

LED105: The number of indoor units of which automatic address setting succeeded

LED104: The number of indoor units of which automatic address setting failed

If automatic address setting failed, make sure that all of the rotary switches SW6 to SW9 on the PCBs of the failed indoor units are positioned at 0 and that wiring and power supply are correct, and then perform automatic address setting again.

7) When the ENTER button (SW109) is pressed, it takes about 30 seconds for end processing. During that time, the LED display blinks.
Setting is complete when the LED display goes off.

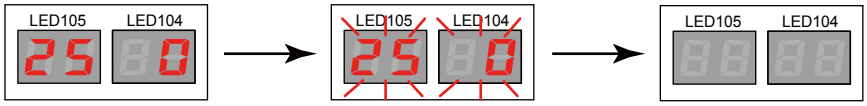

FUNCTION SETTING

1-5-3. RB UNIT AUTOMATIC ADDRESS SETTING

This function is available VR-II series.

⚠Caution
● Please be sure to finish address setting of outdoor unit and indoor unit before performing the automatic address setting of RB unit. ● The RB Unit Automatic Address Setting function can be used for a maximum of 64 RB units installed within the same refrigerant system. ● When setting addresses automatically, be sure to position “RB AD x10” (SW11), “RB AD x1” (SW14), “REF AD x10” (SW13) and “REF AD x1” (SW12) at 0 (Factory setting). ● When a RB unit address is set up, a refrigerant circuit address is also set up at the same time. (The refrigerant circuit address of an outdoor unit being connected within the same refrigerant system is set up.)

1) After verifying that the system is operating normally, press the MODE/EXIT button (SW107) once.

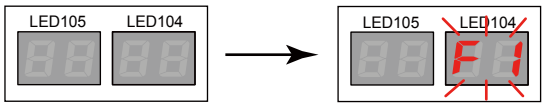

2) Press the SELECT button (SW108) to display “F3” on the LED104.

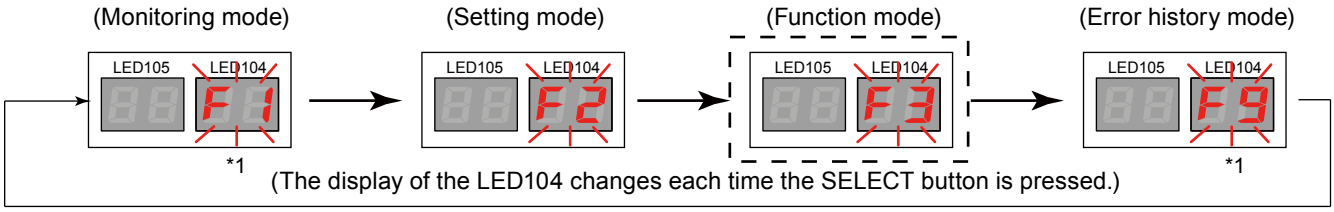

*1 : The “F1” and “F9” modes are used for maintenance, so do not set them in regular

3) When “F3” appears on the LED104, press the ENTER button (SW109).

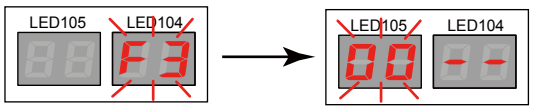

A flashing display appears on the LED105.

4) Press the SELECT button (SW108) to display “22” on the LED105.

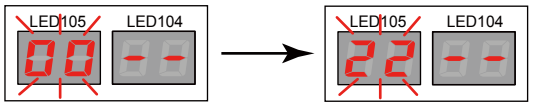

FUNCTION SETTING

FUNCTION SETTING

5) When “22” appears on the LED105, hold down the ENTER button (SW109) for at least 3 seconds.(Unless it is held down for at least 3 seconds, the selection will not be confirmed.)



When the Automatic Address Setting function is activated, the display changes to “run.”

6) When automatic address setting is completed, the number of RB units of which automatic address setting succeeded is displayed on the LED105, and the number of RB units of which automatic address setting failed is displayed on the LED104.
Ex.) When 25 RB units are connected, and the automatic setting of the addresses of all RB units ended normally

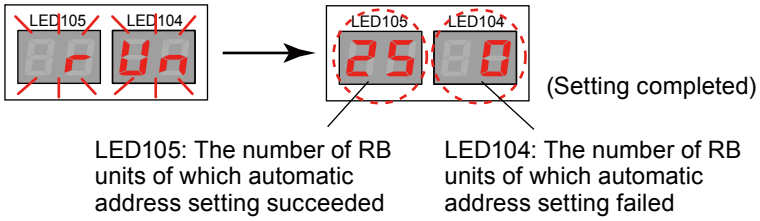

Ex.) When 25 RB units are connected, and the automatic setting of the addresses of three RB units failed

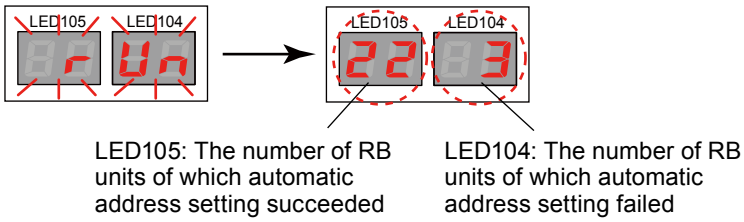

If automatic address setting failed, make sure that all of the rotary switches SW11 to SW14 on the PCBs of the failed RB units are positioned at 0 and that wiring and power supply are correct, and then perform automatic address setting again.

7) When the ENTER button (SW109) is pressed, it takes about 30 seconds for end processing. During that time, the LED display blinks.
Setting is complete when the LED display goes off.

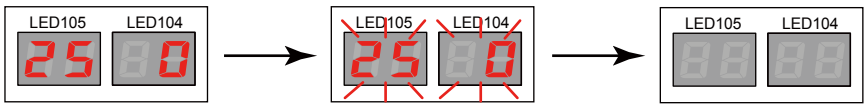

FUNCTION SETTING

1-5-4. EXAMPLE FLOW

● Example 1 : To automatically set the addresses of signal amplifiers, indoor units and RB units Follow the step below

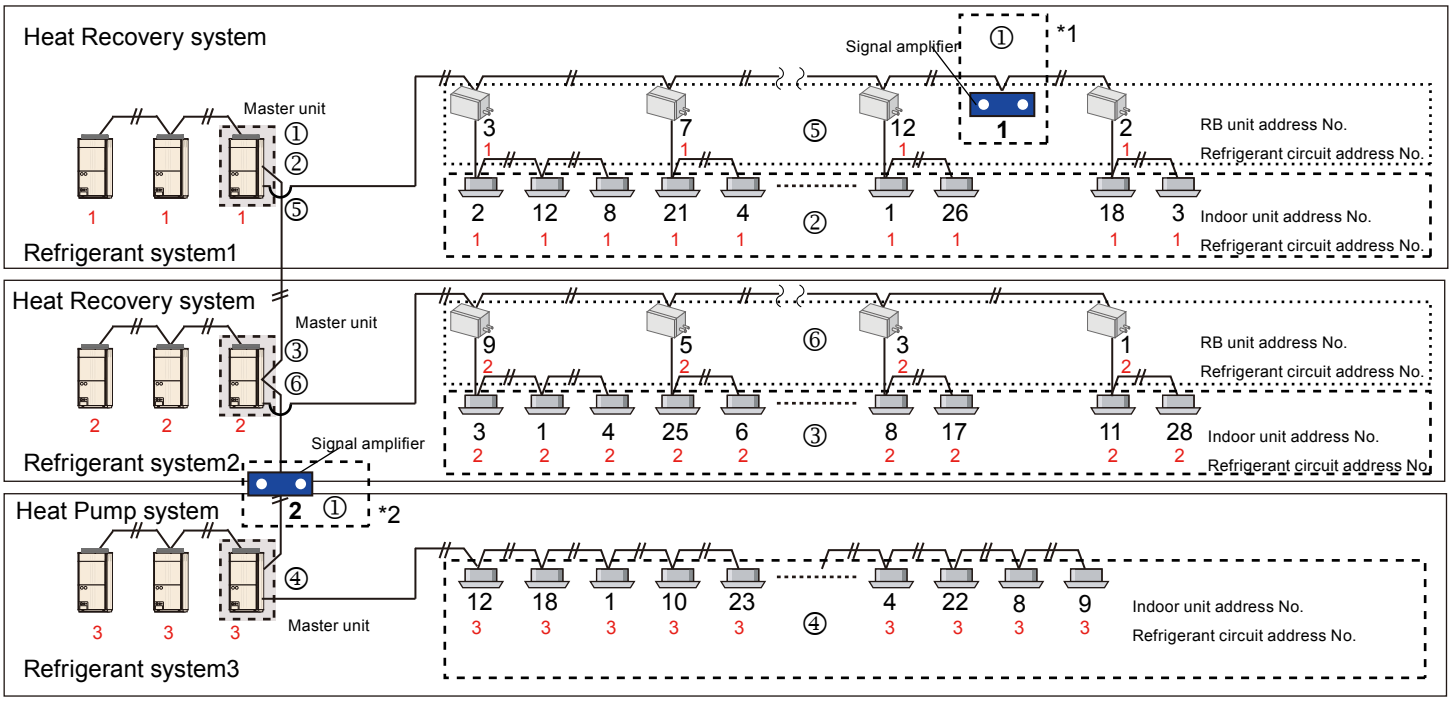

Step 1: ① Activate the Signal Amplifier Automatic Address Setting function on the master unit of Refrigerant System 1.

→An address is automatically assigned to all signal amplifiers on the network. (Because an address is also assigned to the signal amplifiers being connected in Refrigerant Systems 2 and 3, it is not necessary to perform the automatic address setting of these signal amplifiers again on the master units of Refrigerant Systems 2 and 3.)

Step 2: ② Activate the Indoor Unit Automatic Address Setting function on the master unit of Refrigerant System 1.

→An indoor unit address and a refrigerant circuit address are automatically set up for all indoor units being connected in Refrigerant System 1.

Step 3: ③ Activate the Indoor Unit Automatic Address Setting function on the master unit of Refrigerant System 2.

→An indoor unit address and a refrigerant circuit address are automatically set up for all indoor units being connected in Refrigerant System 2.

Step 4: ④ Activate the Indoor Unit Automatic Address Setting function on the master unit of Refrigerant System 3.

→An indoor unit address and a refrigerant circuit address are automatically set up for all indoor units being connected in Refrigerant System 3.

Step 5: ⑤ Activate the RB Unit Automatic Address Setting function on the master unit of Refrigerant System 1.

→A RB unit address and a refrigerant circuit address are automatically set up for all RB units being connected in Refrigerant System 1.

Step 6: ⑥ Activate the RB Unit Automatic Address Setting function on the master unit of Refrigerant System 2.

→A RB unit address and a refrigerant circuit address are automatically set up for all RB units being connected in Refrigerant System 2.

FUNCTION SETTING

⚠Caution

- Before activating the Automatic Address Setting function, be sure to finish setting the refrigerant circuit addresses of outdoor units.
- Setting the addresses of indoor units automatically does not necessary mean that addresses are assigned sequentially starting from the indoor unit which is located the closest to the outdoor units (instead, addresses are assigned randomly).
  With respect to the setting of refrigerant circuit addresses, the same address numbers of the refrigerant circuit addresses of the outdoor units being connected within the same refrigerant system are assigned.
- To find out what addresses have been assigned to individual indoor units, it is necessary to perform a separate address check operation.
- When setting addresses of signal amplifiers, indoor units and RB units automatically, be sure to always set the addresses of signal amplifiers first, set the addresses of indoor units second, set the addresses of RB units last.
- Please be sure to finish address setting of outdoor unit and indoor unit before performing the automatic address setting of RB unit.

∗1: If the total wiring length within a segment is expected to exceed 500 m, insert a signal amplifier (Refer to Chapter 5.).

∗2: If the number of nodes (the number of units of indoor units, outdoor units, controllers and others) is expected to exceed 64 (including signal amplifiers), insert a signal amplifier (Refer to Chapter 5.).

FUNCTION SETTING

● Example 2 : To automatically set the addresses of signal amplifiers only (When the addresses of indoor units and RB units will be set manually) Follow the step below

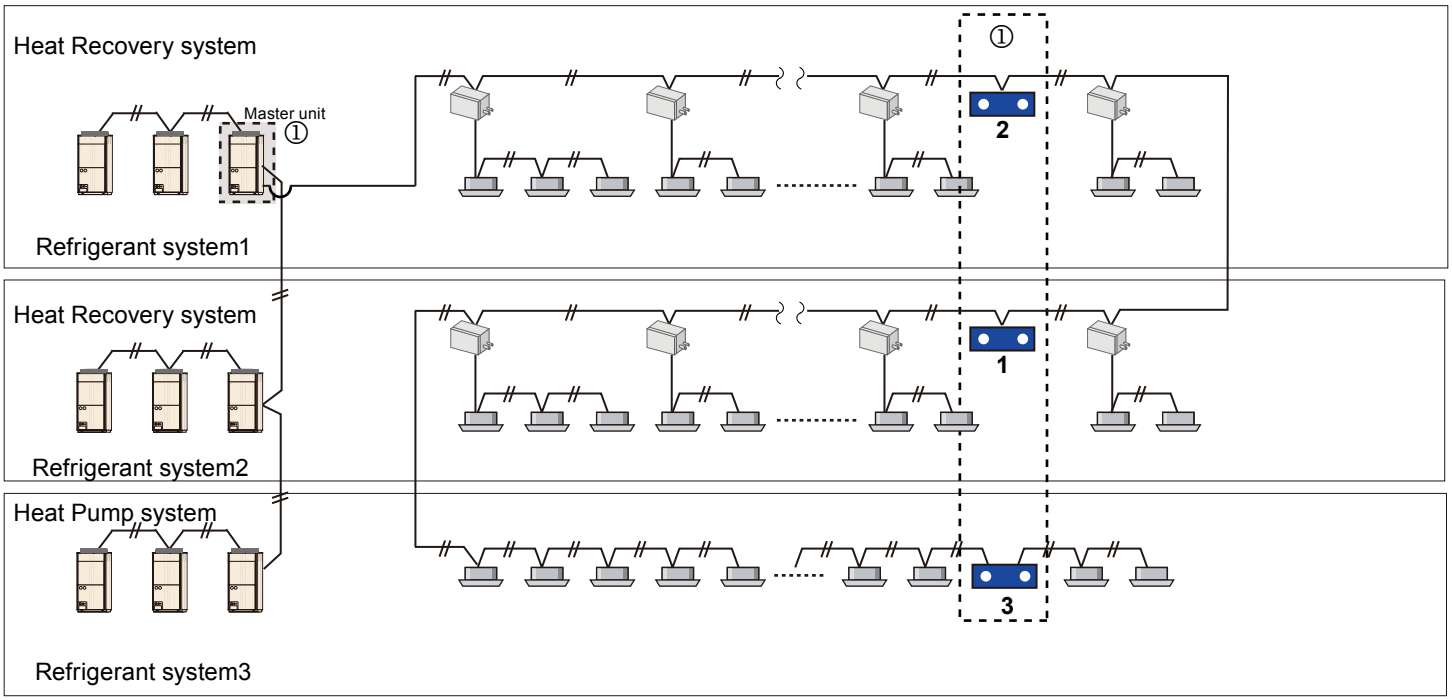

Step 1: ① Activate the Signal Amplifier Automatic Address Setting function on the master unit of Refrigerant System 1.

→An address is automatically assigned to all signal amplifiers on the network.

⚠Caution
● When indoor units are being connected via different refrigerant systems, never activate the Indoor Unit Automatic Address Setting function.
● As long as master units are on the same network, any master unit can set the addresses of signal amplifiers automatically.Perform the automatic address setting of signal amplifiers on only one outdoor unit (master unit) within the same network. (Do not set them again from other outdoor unit.)

FUNCTION SETTING

1-6. TERMINAL RESISTOR SETTING

⚠Caution
Be sure to set the terminal resistor according to specifications. Set the terminal resistor for every network segment (NS). ● If terminal resistor is set in multiple devices, the overall communication system may be damaged. ● If terminal resistor is not set in a device, abnormal communication may occur.

- Be sure to set one terminal resistor in a network segment. You can set the terminal resistor at the outdoor unit or signal amplifier.
- When setting the terminal resistor of a signal amplifier, refer to the installation manual of the signal amplifier.
- When setting multiple terminal resistors, take note of the following items.

①How many network segments are there in a VRF system?

②Where will you set the terminal resistors in a network segment?

(Condition for 1 segment: Total number of outdoor and indoor units and signal amplifiers is less than 64, or the total length of the transmission line is less than 500m)

③How many outdoor units are connected in 1 Refrigerant system?

- From conditions①-③, set outdoor unit DIP switch SET5-4 in accordance with the table below.

DIP SW SET5-4	Terminal resistor	Remarks
OFF	Disable	(Factory setting)
ON	Enable	-

■ SETTING EXAMPLE

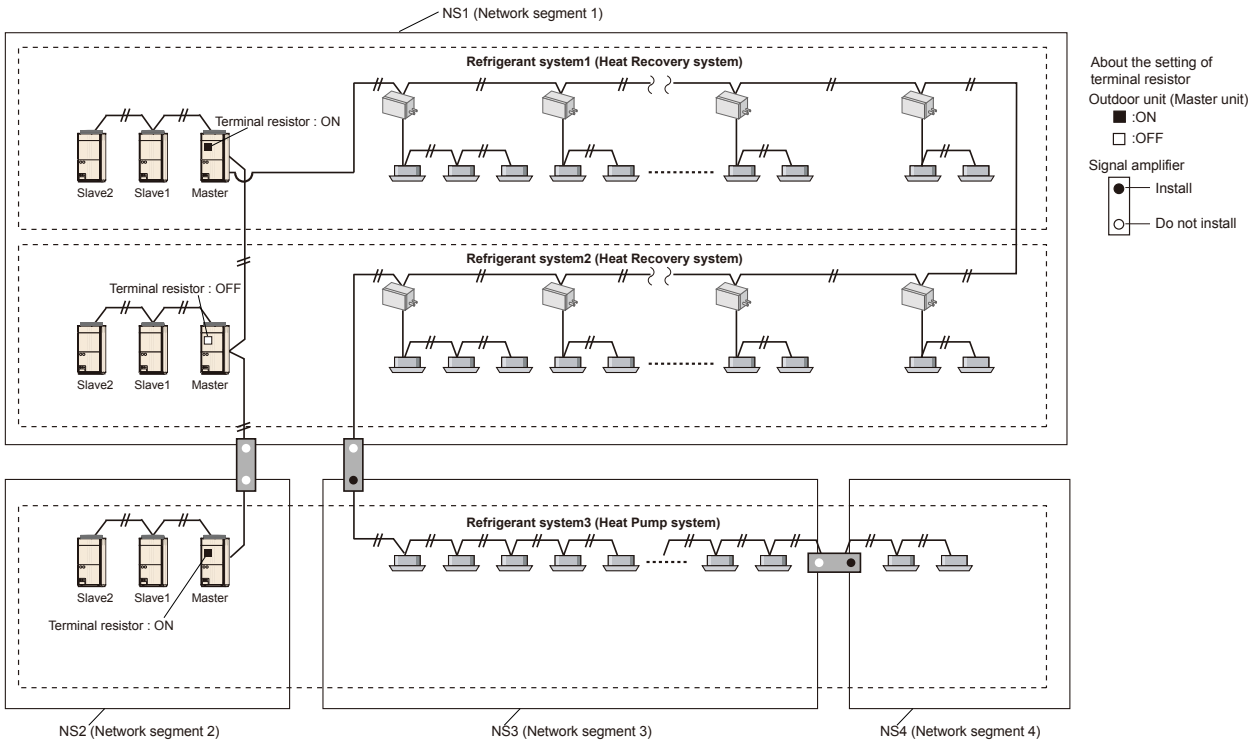

FUNCTION SETTING

1-7. INDOOR UNIT CONNECTION CHECK

This function is available J-II series.

Note
● It is necessary to stop SERVICE TOOL (UTY-ASGX) and WEB MONITORING TOOL (UTY-AMGX), when you will carry out indoor unit connection check.
● Calculation result that 1.1kW indoor unit is calculated as 2.2kW indoor unit will be displayed.

1) After verifying that the system is normally, press the MODE/EXIT button (SW107) once.

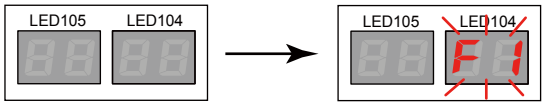

2) Press the SELECT button (SW108) to display “F3” on the LED104.

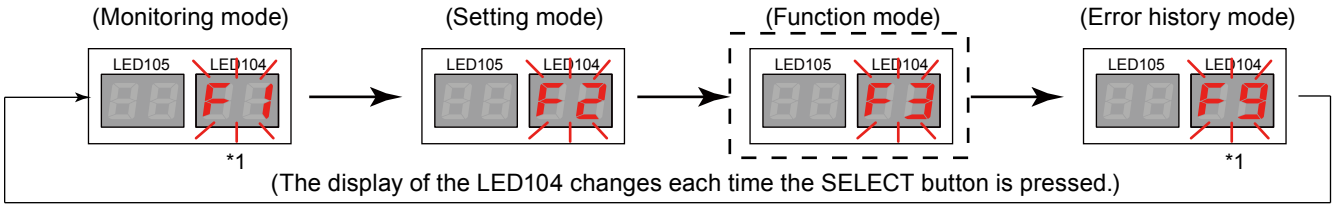

*1 : The “F1” and “F9” modes are used for maintenance, so do not set them in regular

3) When “F3” appears on the LED104, press the ENTER button (SW109).

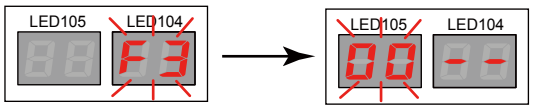

A flashing display appears on the LED105.

4) Press the SELECT button (SW108) to display “12” on the LED105.



5) When “12” appears on the LED105, hold down the ENTER button (SW109) for at least 3 seconds. (Unless it is held down for at least 3 seconds, the selection will not be confirmed.)
When the Indoor Unit Connection Check function is activated, the display changes to “run”.



- When the Indoor Unit Connection Check function is not activated (during maintenance), the display changes to “FAIL”.

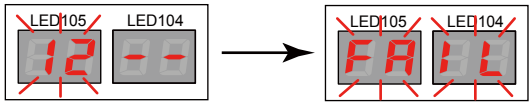

6) When Indoor Unit Connection Check is completed, the number of indoor unit is displayed on the LED104, LED105. Verify that the count matches the number of indoor units being installed.

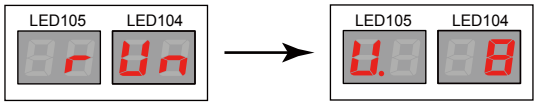

Ex.) When eight indoor units are being connected

FUNCTION SETTING

7) When the number of indoor units appear on the LED104, LED105, press the SELECT button (SW108), the display changes to volume ratio of the indoor units.

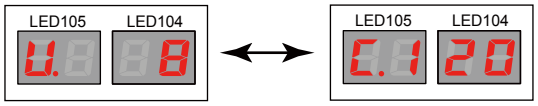

Ex.) When volume ratio of the indoor units is 120 %.

8) When “the number of indoor units” or “volume ratio of the indoor units connection” appears on the LED104, LED105, press the ENTER button (SW109). When Indoor Unit Connection Check is completed, the display changes to “PASS”.

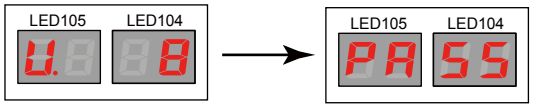

When Indoor Unit Connection Check is error, the display changes to “Err.” or “number of error” every one second.

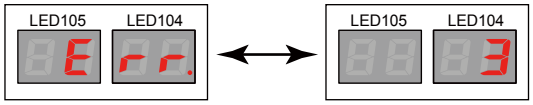

Ex.) Shown numbers of error are three.

When confirm the contents of the error , push the ENTER button (SW109). When there are some errors, display change by push the SELECT button (SW108).

●Number of indoor unit connection is error (6HP:2~9, 5HP:2~8, 4HP:2~7).

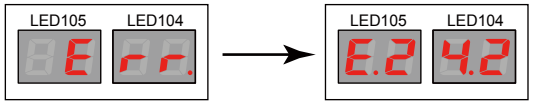

● Volume ratio of the indoor units connection is error (6, 5HP:50~130%, 4HP:46~130%).

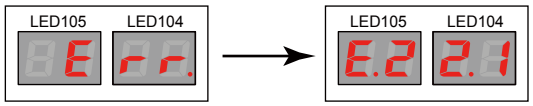

● Overlap address of the indoor unit is error.



Display the address of the overlap indoor unit, hold down the ENTER button (SW109).

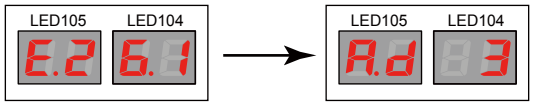

Ex.) Shown that overlap address to indoor unit address 3.

9) To exit the Indoor Unit Connection Check , press the ENTER button (SW109) in the setting completed status shown in step 8) above.

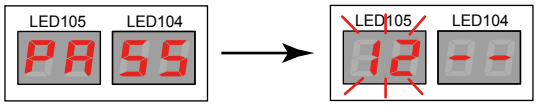

Next, press the MODE/EXIT button (SW107) to exit the Function mode.

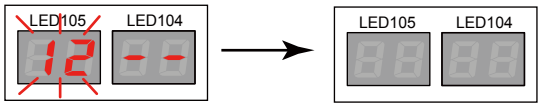

FUNCTION SETTING

2. FUNCTION SETTING

2-1. OUTDOOR UNIT

■ SWITCH POSITION

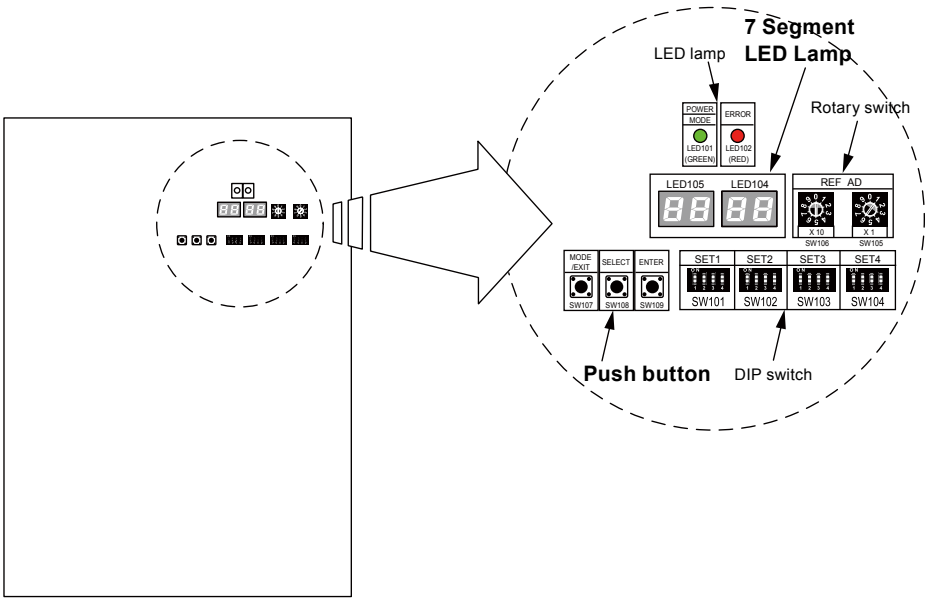

Outdoor unit printed circuit board

Switch position differs depending on outdoor unit.

- Set the functions of an outdoor unit with the push buttons (SW107, SW108 and SW109) while observing the 7-segment LED lamps (LED105 and LED104) on the printed circuit board.

■ PREPARATION

1) Be sure to check that the operation of the outdoor unit has stopped (be sure to stop the operation if it is still running), and turn off the power.
2) Remove the front panel of the outdoor unit, and remove the lid of the electrical component box in order to expose the printed circuit board.
3) Turn on the power of the outdoor unit.

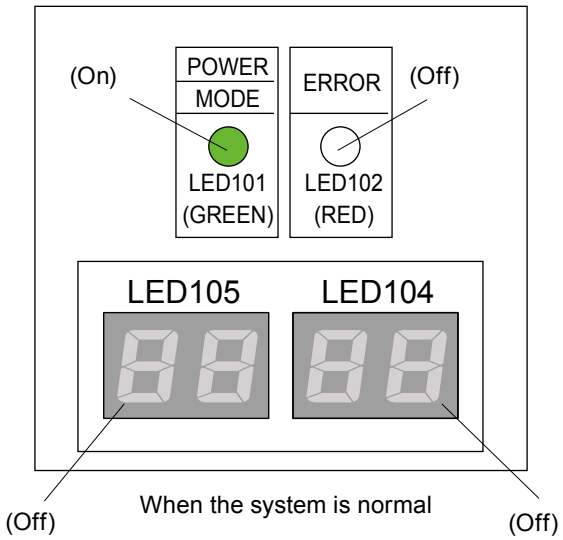

- As shown in the above figure, make sure that the POWER/MODE indicator lamp (LED101) is on and the ERROR indicator lamp (LED102) is off.
- If the ERROR indicator lamp (LED102) flashes, it indicates that an error has occurred. Check wiring and power supply. After making sure that the ERROR indicator lamp (LED102) has turned off, proceed to the next step.

FUNCTION SETTING

■ FUNCTION SETTING

1) After verifying that the system is normally, press the MODE/EXIT button (SW107) once.

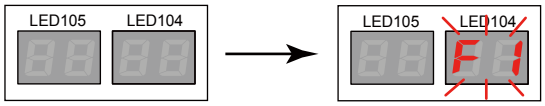

2) Press the SELECT button (SW108), and display “F2” on the LED104.

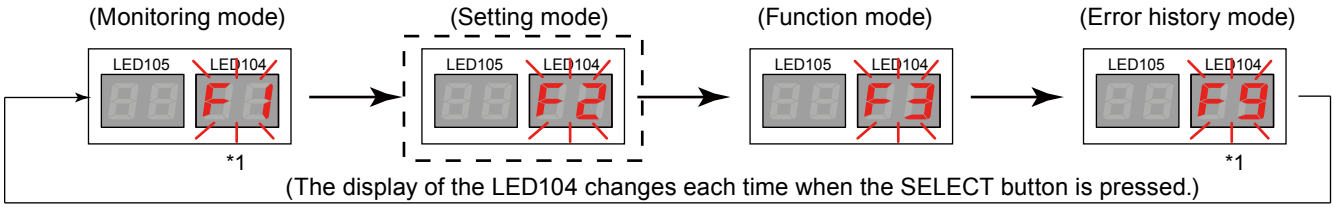

*1:The “F1”and “F9” modes are used for maintenance, so do not set them in regular operation.

3) When “F2” appears on the LED104, press the ENTER button (SW109).
A flashing display appears on the LED105, and the flashing display of “F2” on the LED104 changes to the illuminated display of a number.

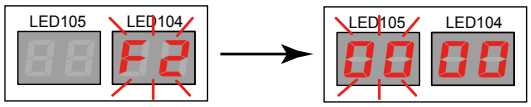

4) Referring to the Settings List shown below, press the SELECT button (SW108) and display the code number of the mode you want to set on the LED105.
Ex.) To select switching between Batch Stop and Emergency Stop

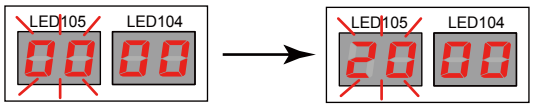

Next, press the ENTER button (SW109), and confirm the selection of the mode you want to set.

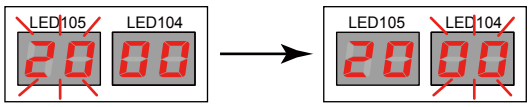

A flashing display on the LED105 changes to an illuminated display, and an illuminated display on the LED104 changes to a flashing display.

FUNCTION SETTING

5) Again, referring to the Settings List shown below, press the SELECT button (SW108), and display the code number of the function you want to set on the LED104.
Ex.) To select the Emergency Stop function

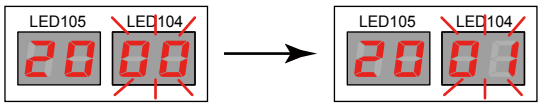

Next, press the ENTER button (SW109), and confirm the selection of the function you want to set.

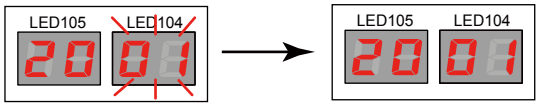

A flashing display on the LED104 changes to an illuminated display.
This completes FUNCTION SETTING.

6) To exit FUNCTION SETTING, press the ENTER button (SW109) in the setting completed status shown in step 5) above.

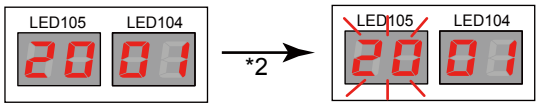

*2 : 5 seconds after, even if ENTER button(SW109) is not pressed , LED105 changes to a flashing display automatically.

Then, press the MODE/EXIT button (SW107) to exit FUNCTION SETTING MODE.

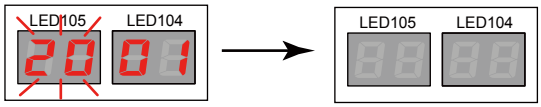

7) To set another function, press the ENTER button (SW109) in the setting completed status shown in step 5) above.

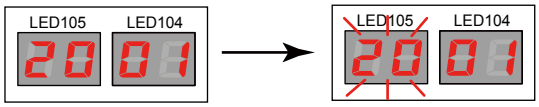

Repeat steps 4) and 5) above to set other functions.
When all settings are complete, perform the operation described in step 6) above to exit.

FUNCTION SETTING

2-1-1. VR-II series

■ SETTINGS LIST

LED105 CODE No.		Setting Mode	LED104 CODE No.		Setting Function	Factory setting	Outdoor unit		Remarks
							Master	Slave	
0	0	Pipe length setting	0	0	Standard (40 to 65m)	●	○	- *1	Pipe length means the length between master outdoor unit and the nearest indoor unit.
			0	1	Short (less than 40m)				
			0	2	Medium (65 to 90m)				
			0	3	Long 1 (90 to 120m)				
			0	4	Long 2 (120 to 150m)				
1	0	Sequential start shift	0	0	Normal	●	○	- *1	The start-up timing of outdoor unit (compressor) can be set up so that it can delay several seconds. This feature is useful when multiple number of outdoor units are installed and turned on at the same time to limit the starting current.
			0	1	21sec. Delay				
			0	2	42sec. Delay				
			0	3	63sec. Delay				
1	1	Cooling capacity shift	0	0	Normal mode	●	○	- *1	
			0	1	Save energy mode 1				
			0	2	High power mode 1				
			0	3	High power mode 2				
			0	4	Forbidden				
1	2	Heating capacity shift	0	0	Normal mode	●	○	- *1	
			0	1	Save energy mode				
			0	2	High power mode 1				
			0	3	High power mode 2				
1	3	Forbidden	0	0	Forbidden	●			Setting forbidden
			0	1	Forbidden				
1	4	Forbidden	0	0	Forbidden	●			Setting forbidden
			0	1	Forbidden				
			0	2	Forbidden				
			0	3	Forbidden				
			0	4	Forbidden				
1	5	Forbidden	0	0	Forbidden	●			Setting forbidden
			0	1	Forbidden				
			0	2	Forbidden				
			0	3	Forbidden				

*1: Do not set this for outdoor units with Slave setting.

FUNCTION SETTING

LED105 CODE No.		Setting Mode	LED104 CODE No.		Setting Function	Factory setting	Outdoor unit		Remarks
							Master	Slave	
2	0	Switching between batch stop or emergency stop	0	0	Batch stop	●	○	- *1	This mode selects the pattern of the stop function to be operated by the external input terminal (CN134). •Batch stop: The stop of all indoor units connected to same refrigerant system due to input signal coming from CN134. •Emergency stop: When emergency stop is actuated, the indoor unit does not accept the operation command from the remote controller. On the other hand, when the emergency stop is released (no input from CN134), the air conditioner does not return to the original operation until operate indoor unit by the remote controller.
			0	1	Emergency stop				
2	2	Snow falling protection fan mode	0	0	Valid	●	○	- *1	This mode operates the fans of outdoor units in order to prevent the units from stopping operation when they are covered by snow.
			0	1	Invalid				
2	3	Interval setting for snow falling protection fan mode	0	0	Standard (30minutes)	●	○	- *1	When the snow falling protection fan mode is set, the operation interval of the fans of outdoor units can be selected.
			0	1	Short1 (5minutes)				
			0	2	Short2 (10minutes)				
			0	3	Short3 (20minutes)				
2	4	High static pressure mode	0	0	Standard	●	○	○	When installing a duct to the blow-off outlet of an outdoor unit, set the high static pressure mode according to the static pressure of the duct to be installed. Furthermore, use this setting if the air blow of an outdoor unit is poor, such as when installed in a place with a low ceiling.
			0	1	High static pressure 1 (equivalent to 30Pa)				
			0	2	High static pressure 2 (equivalent to 80Pa)				
			0	3	Forbidden				
2	5	Forbidden	0	0	Forbidden	●			Setting forbidden
			0	1	Forbidden				
2	6	Forbidden	0	0	Forbidden	●			Setting forbidden
			0	1	Forbidden				
2	7	Forbidden	0	0	Forbidden	●			Setting forbidden
			0	1	Forbidden				

*1: Do not set this for outdoor units with Slave setting.

FUNCTION SETTING

LED105 CODE No.		Setting Mode	LED104 CODE No.		Setting Function	Factory setting	Outdoor unit		Remarks
							Master	Slave	
2	8	Forbidden	0	0	Forbidden	●			Setting forbidden
			0	1	Forbidden				
2	9	Forbidden	0	0	Forbidden	●			Setting forbidden
			0	1	Forbidden				
3	0	Energy saving level setting	0	0	Level 1 (stop)	●	○	- *1	The capacity limit can be selected by the external input terminal (CN133) when operating with the “Energy Saving Peak Cut function.” The lower the level, the more the effect of energy saving, but the cooling/heating performance will also drop.
			0	1	Level 2 (operated at 40% capacity)				
			0	2	Level 3 (operated at 60% capacity)				
			0	3	Level 4 (operated at 80% capacity)				
			0	4	Level 5 (operated at 100% capacity)				
3	2	Forbidden	0	0	Forbidden	●			Setting forbidden
			0	1	Forbidden				
			0	2	Forbidden				
3	3	Forbidden	0	0	Forbidden	●			Setting forbidden
			0	1	Forbidden				
4	0	Capacity priority setting (in low noise mode)	0	0	Off (quiet priority)	●	○	- *1	If the cooling/heating performance becomes insufficient when the low noise mode is set, it is possible to set “capacity priority” that automatically cancels the low noise mode (once performance is restored, the mode will automatically return to the low noise mode).
			0	1	On (capacity priority)				
4	1	Low noise mode setting	0	0	Off (Normal)	●	○	- *1	
			0	1	On (Low noise mode)				
4	2	Low noise mode operation level setting	0	0	Level 1	●	○	- *1	Level1: The operating sound lowers from about 3 to 5 dB(A) more than the rated value Level2: The operating sound lowers from about 3 to 5 dB(A) more than the Level1
			0	1	Level 2				

*1: Do not set this for outdoor units with Slave setting.

FUNCTION SETTING

LED105 CODE No.		Setting Mode	LED104 CODE No.		Setting Function	Factory setting	Outdoor unit		Remarks
							Master	Slave	
6	0	Back up operation 1	0	0	On	●	○	- *1	
			0	1	Off				
6	1	Forbidden	0	0	On	●	○	- *1	Setting forbidden
			0	1	Off				
6	2	Forbidden	0	0	On	●	○	- *1	Setting forbidden
			0	1	Off				
6	3	Forbidden	0	0	On	●	○	- *1	Setting forbidden
			0	1	Off				

*1: Do not set this for outdoor units with Slave setting.

FUNCTION SETTING

LED105 CODE No.		Setting Mode	LED104 CODE No.		Setting Function	Factory setting	Outdoor unit		Remarks
							Master	Slave	
7	0	Electricity meter No. setting 1 *2	0	0	Setting number x00	●	○	○	Set the ones digit and tens digit of the No. of the electricity meter connected to CN135.
			0	1	Setting number x01				
			▪ ▪ ▪	▪ ▪ ▪	▪ ▪ ▪				
			9	8	Setting number x98				
			9	9	Setting number x99				
7	1	Electricity meter No. setting 2 *2"	0	0	Setting number 0xx	●	○	○	Set the hundreds digit of the No. of the electricity meter connected to CN135.
			0	1	Setting number 1xx				
			0	2	Setting number 2xx				
7	2	Electricity meter pulse setting 1 *3"	0	0	Setting number xx00	●	○	○	Set the ones digit and tens digit of the No. of the electricity meter pulse setting connected to CN135.
			0	1	Setting number xx01				
			▪ ▪ ▪	▪ ▪ ▪	▪ ▪ ▪				
			9	8	Setting number xx98				
			9	9	Setting number xx99				
7	3	Electricity meter pulse setting 2 *3"	0	0	Setting number 00xx	●	○	○	Set the hundreds digit and thousands digit of the electricity meter pulse setting connected to CN135.
			0	1	Setting number 01xx				
			▪ ▪ ▪	▪ ▪ ▪	▪ ▪ ▪				
			9	8	Setting number 98xx				
			9	9	Setting number 99xx				

*2: When electricity meter No. is set to “000” and “201 to 299”, the pulses input to CN135 become ineffective. Available setting number is "001" to "200"

*3: When the electricity meter pulse setting is set to “0000”, the pulses input to CN135 become ineffective. Available setting number is "0001" to "9999"

FUNCTION SETTING

2-1-2. V-II series

■ SETTINGS LIST

LED105 CODE No.		Setting Mode	LED104 CODE No.		Setting Function	Factory setting	Outdoor unit		Remarks
							Master	Slave	
0	0	Pipe length setting	0	0	Standard (40 to 65m)	●	○	- *1	Pipe length means the length between master outdoor unit and the nearest indoor unit.
			0	1	Short (less than 40m)				
			0	2	Medium (65 to 90m)				
			0	3	Long 1 (90 to 120m)				
			0	4	Long 2 (120 to 150m)				
1	0	Sequential start shift	0	0	Normal	●	○	- *1	The start-up timing of outdoor unit (compressor) can be set up so that it can delay several seconds. This feature is useful when multiple number of outdoor units are installed and turned on at the same time to limit the starting current.
			0	1	21sec. Delay				
			0	2	42sec. Delay				
			0	3	63sec. Delay				
1	1	Cooling capacity shift	0	0	Normal mode	●	○	- *1	
			0	1	Save energy mode 1				
			0	2	High power mode 1				
			0	3	High power mode 2				
			0	4	Forbidden				
1	2	Heating capacity shift	0	0	Normal mode	●	○	- *1	
			0	1	Save energy mode				
			0	2	High power mode 1				
			0	3	High power mode 2				
1	3	Forbidden	0	0	Forbidden	●			Setting forbidden
			0	1	Forbidden				
2	0	Switching between batch stop or emergency stop	0	0	Batch stop	●	○	- *1	This mode selects the pattern of the stop function to be operated by the external input terminal (CN134). •Batch stop: The stop of all indoor units connected to same refrigerant system due to input signal coming from CN134. •Emergency stop: When emergency stop is actuated, the indoor unit does not accept the operation command from the remote controller. On the other hand, when the emergency stop is released (no input from CN134), the air conditioner does not return to the original operation until operate indoor unit by the remote controller.
			0	1	Emergency stop				

*1: Do not set this for outdoor units with Slave setting.

FUNCTION SETTING

LED105 CODE No.		Setting Mode	LED104 CODE No.		Setting Function	Factory setting	Outdoor unit		Remarks
							Master	Slave	
2	1	Operation mode selecting method	0	0	Priority given to the first command	●	○	- *1	Select the priority setting of the operation mode. •Priority given to the first command: Priority is given to the operation mode which is set first. •Priority given to external input of outdoor unit: Priority is given to the operation mode which is set by the external input terminal (CN132). •Priority given to administrative indoor unit: Priority is given to the operation mode of the administrative indoor unit which is set by the wired remote controller.
			0	1	Priority given to external input of outdoor unit				
			0	2	Priority given to administrative indoor unit				
2	2	Snow falling protection fan mode	0	0	Normal mode	●	○	- *1	This mode operates the fans of outdoor units in order to prevent the units from stopping operation when they are covered by snow.
			0	1	Snow falling protection fan mode				
2	3	Interval setting for snow falling protection fan mode	0	0	Standard (30minutes)	●	○	- *1	When the snow falling protection fan mode is set, the operation interval of the fans of outdoor units can be selected.
			0	1	Short1 (5minutes)				
			0	2	Short2 (10minutes)				
			0	3	Short3 (20minutes)				
2	4	High static pressure mode	0	0	Standard	●	○	○	When installing a duct to the blow-off outlet of an outdoor unit, set the high static pressure mode according to the static pressure of the duct to be installed. Furthermore, use this setting if the air blow of an outdoor unit is poor, such as when installed in a place with a low ceiling.
			0	1	High static pressure 1 (equivalent to 30Pa)				
			0	2	High static pressure 2 (equivalent to 80Pa)				
			0	3	Forbidden				
2	5	Forbidden	0	0	Forbidden	●			Setting forbidden
			0	1	Forbidden				
2	6	Forbidden	0	0	Forbidden	●			Setting forbidden
			0	1	Forbidden				
2	7	Forbidden	0	0	Forbidden	●			Setting forbidden
			0	1	Forbidden				
2	8	Forbidden	0	0	Forbidden	●			Setting forbidden
			0	1	Forbidden				
2	9	Forbidden	0	0	Forbidden	●			Setting forbidden
			0	1	Forbidden				

*1: Do not set this for outdoor units with Slave setting.

FUNCTION SETTING

LED105 CODE No.		Setting Mode	LED104 CODE No.		Setting Function	Factory setting	Outdoor unit		Remarks
							Master	Slave	
3	0	Energy saving level setting	0	0	Level 1 (stop)	●	○	- *1	The capacity limit can be selected by the external input terminal (CN133) when operating with the “Energy Saving Peak Cut function.” The lower the level, the more the effect of energy saving, but the cooling/heating performance will also drop.
			0	1	Level 2 (operated at 40% capacity)				
			0	2	Level 3 (operated at 60% capacity)				
			0	3	Level 4 (operated at 80% capacity)				
			0	4	Level 5 (operated at 100% capacity)				
4	0	Capacity priority setting (in low noise mode)	0	0	Off (quiet priority)	●	○	- *1	If the cooling/heating performance becomes insufficient when the low noise mode is set, it is possible to set “capacity priority” that automatically cancels the low noise mode (once performance is restored, the mode will automatically return to the low noise mode).
			0	1	On (capacity priority)				
4	1	Low noise mode setting	0	0	Off (Normal)	●	○	- *1	
			0	1	On (Low noise mode)				
4	2	Low noise mode operation level setting	0	0	Level 1 (55dB)	●	○	- *1	The noise level when operating in the low noise mode can be set.
			0	1	Level 2 (50dB)				
6	0	Back up operation	0	0	On	●	○	- *1	
			0	1	Off				

*1: Do not set this for outdoor units with Slave setting.

FUNCTION SETTING

LED105 CODE No.		Setting Mode	LED104 CODE No.		Setting Function	Factory setting	Outdoor unit		Remarks
							Master	Slave	
7	0	Electricity meter No. setting 1 *2	0	0	Setting number x00	●	○	○	Set the ones digit and tens digit of the No. of the electricity meter connected to CN135.
			0	1	Setting number x01				
			▪ ▪ ▪	▪ ▪ ▪	▪ ▪ ▪				
			9	8	Setting number x98				
			9	9	Setting number x99				
7	1	Electricity meter No. setting 2 *2"	0	0	Setting number 0xx	●	○	○	Set the hundreds digit of the No. of the electricity meter connected to CN135.
			0	1	Setting number 1xx				
			0	2	Setting number 2xx				
7	2	Electricity meter pulse setting 1 *3"	0	0	Setting number xx00	●	○	○	Set the ones digit and tens digit of the No. of the electricity meter pulse setting connected to CN135.
			0	1	Setting number xx01				
			▪ ▪ ▪	▪ ▪ ▪	▪ ▪ ▪				
			9	8	Setting number xx98				
			9	9	Setting number xx99				
7	3	Electricity meter pulse setting 2 *3"	0	0	Setting number 00xx	●	○	○	Set the hundreds digit and thousands digit of the electricity meter pulse setting connected to CN135.
			0	1	Setting number 01xx				
			▪ ▪ ▪	▪ ▪ ▪	▪ ▪ ▪				
			9	8	Setting number 98xx				
			9	9	Setting number 99xx				
9	0	Forbidden	0	0	Forbidden	●			Setting forbidden
			0	1	Forbidden				
			0	2	Forbidden				
			0	3	Forbidden				
			0	4	Forbidden				
			0	5	Forbidden				
			0	6	Forbidden				
			0	7	Forbidden				
			0	8	Forbidden				
			0	9	Forbidden				
			1	0	Forbidden				
			1	1	Forbidden				

*2: When electricity meter No. is set to “000” and “201 to 299”, the pulses input to CN135 become ineffective. Available setting number is "001" to "200"

*3: When the electricity meter pulse setting is set to “0000”, the pulses input to CN135 become ineffective. Available setting number is "0001" to "9999"

FUNCTION SETTING

2-1-3. J-II series

■ SETTINGS LIST

LED105 CODE No.		Setting Mode	LED104 CODE No.		Setting Function	Factory setting	Remarks
0	0	Pipe length setting	0	0	Standard (40 to 65m)	●	Pipe length means the length between outdoor unit and the nearest indoor unit.
			0	1	Short (less than 40m)		
			0	2	Medium (65 to 90m)		
			0	3	Long 1 (90 to 120m)		
			0	4	Forbidden		
1	0	Forbidden	0	0	Forbidden	●	Setting forbidden
			0	1	Forbidden		
			0	2	Forbidden		
			0	3	Forbidden		
1	1	Cooling capacity shift	0	0	Normal mode	●	
			0	1	Save energy mode 1		
			0	2	High power mode 1		
			0	3	High power mode 2		
			0	4	Forbidden		
1	2	Heating capacity shift	0	0	Normal mode	●	
			0	1	Save energy mode		
			0	2	High power mode 1		
			0	3	High power mode 2		
1	3	Forbidden	0	0	Forbidden	●	Setting forbidden
			0	1	Forbidden		
1	4	Forbidden	0	0	Forbidden	●	Setting forbidden
			0	1	Forbidden		
			0	2	Forbidden		
			0	3	Forbidden		
			0	4	Forbidden		
2	0	Switching between batch stop or emergency stop	0	0	Batch stop	●	This mode selects the pattern of the stop function to be operated by the external input terminal (CN134). •Batch stop: The stop of all indoor units connected to same refrigerant system due to input signal coming from CN134. •Emergency stop: When emergency stop is actuated, the indoor unit does not accept the operation command from the remote controller. On the other hand, when the emergency stop is released (no input from CN134), the air conditioner does not return to the original operation until operate indoor unit by the remote controller.
			0	1	Emergency stop		

FUNCTION SETTING

LED105 CODE No.		Setting Mode	LED104 CODE No.		Setting Function	Factory setting	Remarks
2	1	Operation mode selecting method	0	0	Priority given to the first command	●	Select the priority setting of the operation mode. •Priority given to the first command: Priority is given to the operation mode which is set first. •Priority given to external input of outdoor unit: Priority is given to the operation mode which is set by the external input terminal (CN132). •Priority given to administrative indoor unit: Priority is given to the operation mode of the administrative indoor unit which is set by the wired remote controller.
			0	1	Priority given to external input of outdoor unit		
			0	2	Priority given to administrative indoor unit		
2	2	Forbidden	0	0	Forbidden	●	Setting forbidden
			0	1	Forbidden		
2	3	Forbidden	0	0	Forbidden	●	Setting forbidden
			0	1	Forbidden		
			0	2	Forbidden		
			0	3	Forbidden		
2	4	Forbidden	0	0	Forbidden	●	Setting forbidden
			0	1	Forbidden		
			0	2	Forbidden		
			0	3	Forbidden		
2	5	Forbidden	0	0	Forbidden	●	Setting forbidden
			0	1	Forbidden		
			0	2	Forbidden		
			0	3	Forbidden		
2	6	Forbidden	0	0	Forbidden	●	Setting forbidden
			0	1	Forbidden		
2	7	Forbidden	0	0	Forbidden	●	Setting forbidden
			0	1	Forbidden		
2	8	Forbidden	0	0	Forbidden	●	Setting forbidden
			0	1	Forbidden		
2	9	Forbidden	0	0	Forbidden	●	Setting forbidden
			0	1	Forbidden		

FUNCTION SETTING

LED105 CODE No.		Setting Mode	LED104 CODE No.		Setting Function	Factory setting	Remarks
3	0	Outdoor unit capacity save setting	0	0	Level 1 (stop)	●	The capacity limit can be selected by the external input terminal (CN133) when operating with the “Outdoor unit capacity save function.” The lower the level, the more the effect of energy saving, but the cooling/heating performance will also drop.
			0	1	Level 2		
			0	2	Level 3		
			0	3	Level 4		
			0	4	Level 5		
3	1	Forbidden	0	0	Forbidden	●	Setting forbidden
			0	1	Forbidden		
4	0	Capacity priority setting (in low noise mode)	0	0	Off (quiet priority)	●	If the cooling/heating performance becomes insufficient when the low noise mode is set, it is possible to set “capacity priority” that automatically cancels the low noise mode (once performance is restored, the mode will automatically return to the low noise mode).
			0	1	On (capacity priority)		
4	1	Low noise mode setting	0	0	Off (Normal)	●	
			0	1	On (Low noise mode)		
4	2	Forbidden	0	0	Forbidden	●	Setting forbidden
			0	1	Forbidden		
6	0	Forbidden	0	0	Forbidden	●	Setting forbidden
			0	1	Forbidden		

FUNCTION SETTING

LED105 CODE No.		Setting Mode	LED104 CODE No.		Setting Function	Factory setting	Remarks
7	0	Electricity meter No. setting 1 *1	0	0	Setting number x00	●	Set the ones digit and tens digit of the No. of the electricity meter connected to CN135.
			0	1	Setting number x01		
			▪ ▪ ▪	▪ ▪ ▪	▪ ▪ ▪		
			9	8	Setting number x98		
			9	9	Setting number x99		
7	1	Electricity meter No. setting 2 *1	0	0	Setting number 0xx	●	Set the hundreds digit of the No. of the electricity meter connected to CN135.
			0	1	Setting number 1xx		
			0	2	Setting number 2xx		
7	2	Electricity meter pulse setting 1 *2	0	0	Setting number xx00	●	Set the ones digit and tens digit of the No. of the electricity meter pulse setting connected to CN135.
			0	1	Setting number xx01		
			▪ ▪ ▪	▪ ▪ ▪	▪ ▪ ▪		
			9	8	Setting number xx98		
			9	9	Setting number xx99		
7	3	Electricity meter pulse setting 2 *2	0	0	Setting number 00xx	●	Set the hundreds digit and thousands digit of the electricity meter pulse setting connected to CN135.
			0	1	Setting number 01xx		
			▪ ▪ ▪	▪ ▪ ▪	▪ ▪ ▪		
			9	8	Setting number 98xx		
			9	9	Setting number 99xx		
9	0	Forbidden	0	0	Forbidden	●	Setting forbidden
			0	1	Forbidden		
			0	2	Forbidden		
			0	3	Forbidden		
			0	4	Forbidden		
			0	5	Forbidden		
			0	6	Forbidden		
			0	7	Forbidden		
			0	8	Forbidden		
			0	9	Forbidden		
			1	0	Forbidden		
			1	1	Forbidden		

*1: When electricity meter No. is set to “000” and “201 to 299”, the pulses input to CN135 become ineffective.
Available setting number is "001" to "200"

*2: When the electricity meter pulse setting is set to “0000”, the pulses input to CN135 become ineffective.
Available setting number is "0001" to "9999"

FUNCTION SETTING

2-2. INDOOR UNIT (setting by switch)

■ SWITCH POSITION

Type of PCB	Type of Indoor unit
Type 1	Compact cassette, Cassette, Low static pressure duct/Concealed floor, Slim duct/Slim concealed floor, Medium static pressure duct, High static pressure duct, Floor/ceiling, Ceiling
Type 2	Wall mounted (AS*A18, 24, 30)
Type 3	Wall mounted (AS*E04, 07, 09, 12, 14, AS*A04, 07, 09, 12, 14)

● Type 1

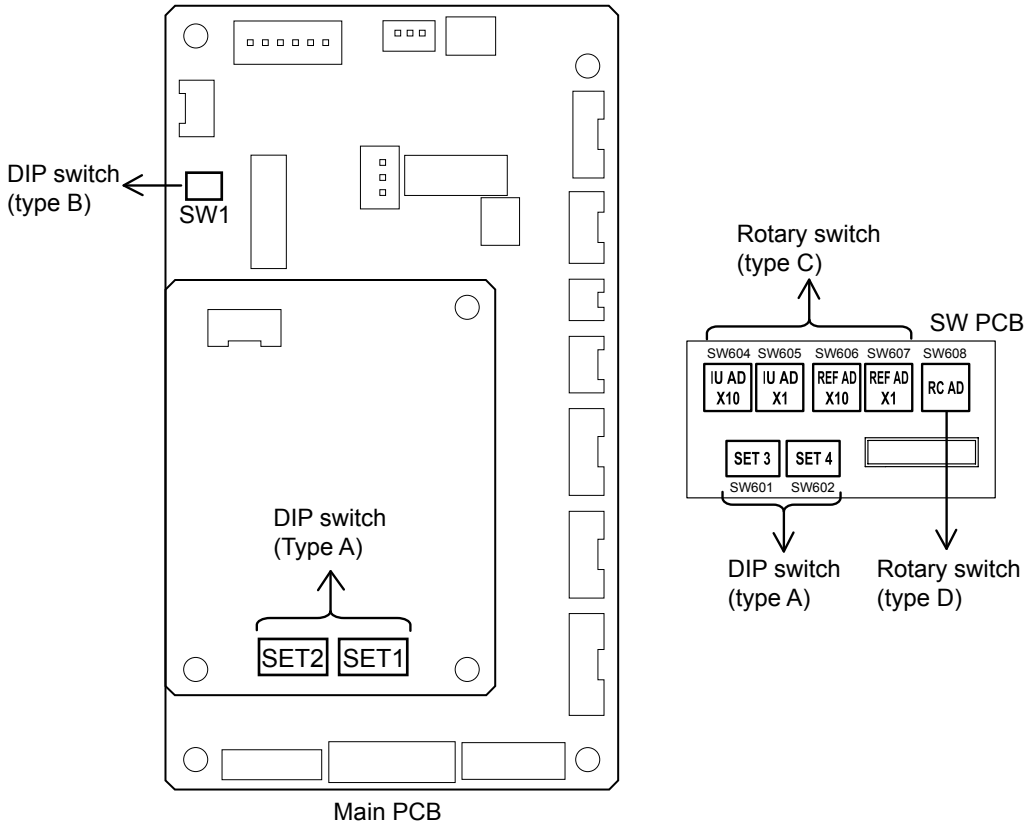

● Type 2

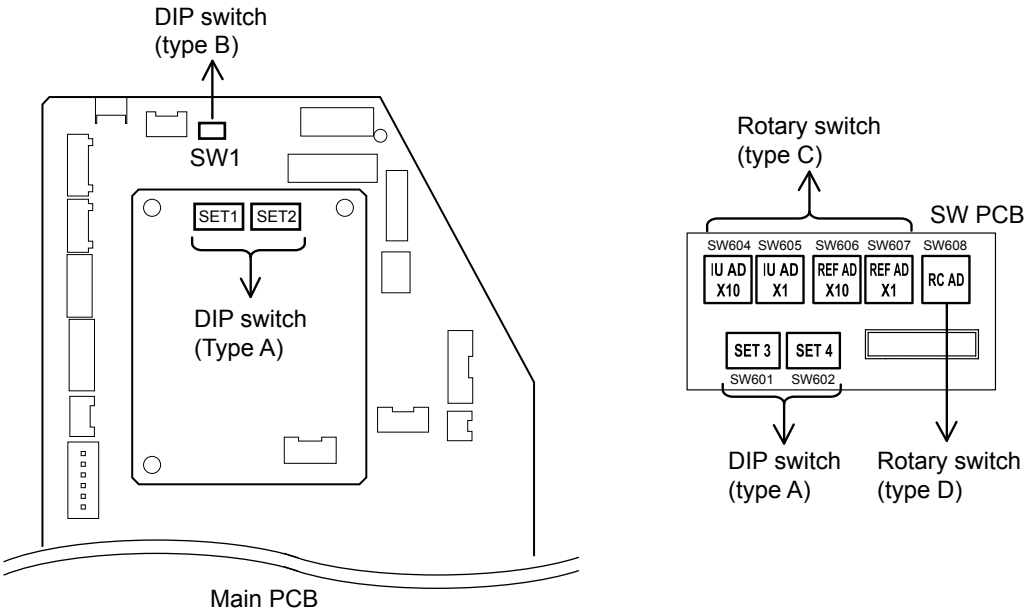

FUNCTION SETTING

FUNCTION SETTING

● Type 3

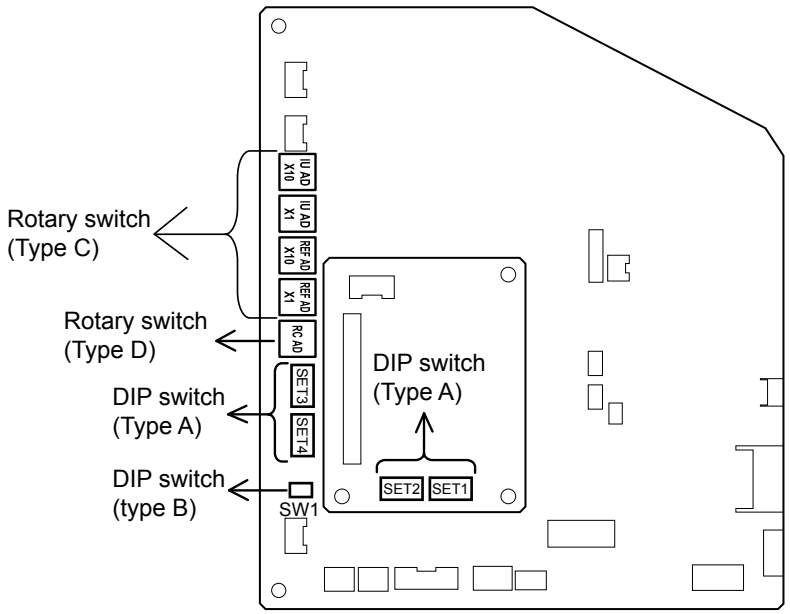

Main PCB

■ SWITCH TYPE

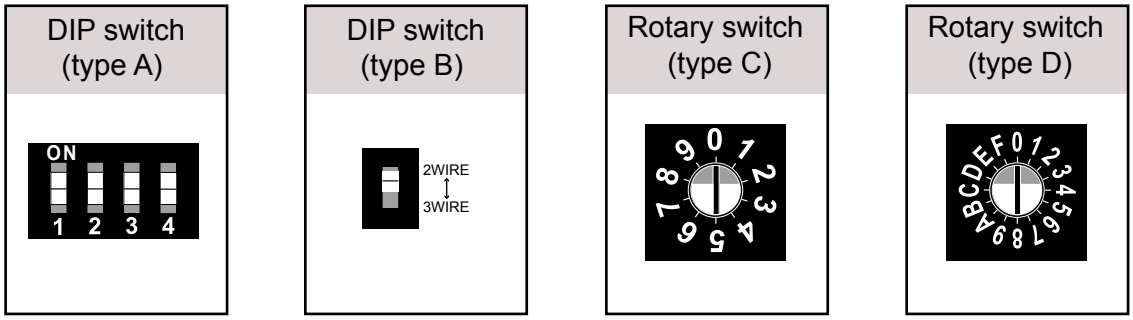

FUNCTION SETTING

FUNCTION SETTING

■ SWITCH TABLE

DIP-SW	type A	SET1	1	Forbidden (Indoor unit capacity setting)
			2	Forbidden (Indoor unit capacity setting)
			3	Forbidden (Indoor unit capacity setting)
			4	Forbidden (Indoor unit capacity setting)
		SET2	1	Forbidden (Indoor unit capacity setting)
			2	External input select "edge/pulse"
			3	Fan delay switch
			4	Forbidden
		SET3	1	Wireless remote controller custom code switch 1
			2	Wireless remote controller custom code switch 2
			3	Forbidden
			4	Forbidden
		SET4	1	Drainage function switch (Slim Duct type only)
			2	Auto louver grille setting switch (Slim Duct type only)
			3	Set temperature upper limit change of cooling operation switch
			4	Forbidden
	type B	SW1		Remote controller wire type switch
Rotary SW	type C	IU AD x 1		Indoor unit address switch 1
		IU AD x 10		Indoor unit address switch 2
		REF AD x1		Refrigerant circuit address switch 1
		REF AD x10		Refrigerant circuit address switch 2
	type D	RC AD		Remote controller address switch

FUNCTION SETTING

■ DIP SWITCH SETTING

● SET1 and SET2-1 setting (Never change at the site)

●Indoor unit capacity (Setting forbidden)

SET1-1	SET1-2	SET1-3	SET1-4	SET2-1	Indoor unit capacity
OFF	OFF	OFF	OFF	ON	1.1kW
OFF	OFF	OFF	OFF	OFF	2.2kW
ON	OFF	OFF	OFF	OFF	2.8kW
OFF	ON	OFF	OFF	OFF	3.6kW
ON	ON	OFF	OFF	OFF	4.0kW
OFF	OFF	ON	OFF	OFF	4.5kW
ON	OFF	ON	OFF	OFF	5.6kW
OFF	ON	ON	OFF	OFF	7.1kW
ON	ON	ON	OFF	OFF	8.0kW
OFF	OFF	OFF	ON	OFF	9.0kW
ON	OFF	OFF	ON	OFF	11.2kW
OFF	ON	OFF	ON	OFF	12.5kW
ON	ON	OFF	ON	OFF	14.0kW
OFF	OFF	ON	ON	OFF	18.0kW
ON	OFF	ON	ON	OFF	22.4kW
OFF	ON	ON	ON	OFF	25.0kW

FUNCTION SETTING

● SET2 setting

●External input select “edge/pulse”

(◆...Factory setting)

	SET2-2	External input select
◆	OFF	Edge
	ON	pulse

●Fan delay switch

It is a function to delay the stop of cooling fan when the air conditioner is stopped.
When auxiliary heater is connected, please turn "ON" this switch.
When you connect auxiliary heater, be careful enough.

(◆...Factory setting)

	SET2-3	Fan delay
◆	OFF	Invalid
	ON	Valid

●SET2-4 setting forbidden

(◆...Factory setting)

	SET2-4	
◆	OFF	Fixed at OFF
	ON	Setting forbidden

FUNCTION SETTING

● SET3 setting

●Wireless remote controller custom code switch

This DIP switch sets the custom code of the wireless remote controller of an indoor unit.

If multiple indoor units are being installed in the same room, switch the custom codes of the corresponding wireless remote controllers in order to prevent their signals from being mixed.

When switching the custom code of the wireless remote controller of an indoor unit, be sure to also switch the code setting on the paired wireless remote controller side at the same time.

(◆...Factory setting)

	SET3-1	SET3-2	Custom code
◆	OFF	OFF	Type A
	ON	OFF	Type B
	OFF	ON	Type C
	ON	ON	Type D

How to switch the code on the wireless remote controller side

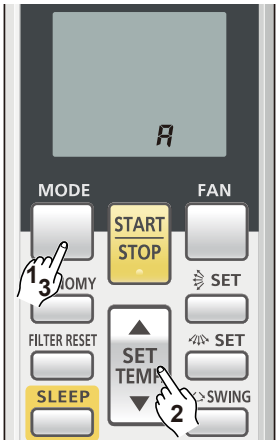

1) Press the MODE button for more than five seconds to start the code change.
2) Press the SET TEMP. (▲) or (▼) button to select the desired code.
   ↱ A → B → C → D ↰
3) Press the MODE button again to end the code change.

●SET3-3, SET3-4 setting forbidden

(◆...Factory setting)

	SET3-3	SET3-4	
◆	OFF	OFF	Fixed at OFF
	ON	ON	Setting forbidden

FUNCTION SETTING

● SET4 setting

●Drainage function switch (Slim Duct type only)

If contained drain pump is not used, set the drainage function to "Invalid" in the drainage function switching.

(◆...Factory setting)

	SET4-1	Drainage function
◆	OFF	Valid
	ON	Invalid

*Note: Pls. be sure about water leakage from the indoor unit while changing setting.

●Auto louver grille setting switch (Slim Duct type only)

When Auto louver grille kit (optional parts) is attached, set the Auto louver grille setting "Valid".

(◆...Factory setting)

	SET4-2	Auto louver grille setting
◆	OFF	Invalid
	ON	Valid

●Set temperature upper limit change of cooling operation switch

This setting can be raised the upper limit of the cooling temperature setting range.

(◆...Factory setting)

	SET4-3	Set temperature range
◆	OFF	Standard (18°C to 30°C)
	ON	Extension (18°C to 32°C)

This setting can be used when connecting to the following controllers.

- Wired remote controller (2-wire type)
- Central remote controller
- Touch panel controller
- System controller
- Service tool
- Web monitoring tool
- BACnet® GATEWAY

Note: When setting the extension function, the connectable capacity of indoor unit is 100% or less.
Please do not make a standard setup and an extension setup intermingled in remote controller group.

●SET4-4 setting forbidden

(◆...Factory setting)

	SET4-4	
◆	OFF	Fixed at OFF
	ON	Setting forbidden

FUNCTION SETTING

● SW1 setting

●Remote controller wire type setting switch

(◆...Factory setting)

	SW1	Remote controller wire type
◆	2WIRE	2 Wire type
	3WIRE	3 Wire type

■ ROTARY SWITCH SETTING

● IU AD setting

●Indoor unit address switch

Sets the indoor unit addresses.

Please see "1-3 address setting" for indoor unit address conversion table.

INDOOR UNIT ADDRESS SWITCH (Factory setting IU AD x 1: 0, IU AD x 10: 0)

Rotary SW	Description	Remarks
IU AD x 1	Indoor unit address Switch 1	Indoor unit address (the first digit)
IU AD x 10	Indoor unit address Switch 2	Indoor unit address (the second digit)

● REF AD setting

●Refrigerant circuit address switch

Sets the refrigerant circuit address.

Please see "1-3 address setting" for refrigerant circuit address conversion table.

REFRIGERANT CIRCUIT ADDRESS SWITCH (Factory setting REF AD x 1: 0, REF AD x 10: 0)

Rotary SW	Description	Remarks
REF AD x 1	Refrigerant circuit address Switch 1	Refrigerant circuit address (the first digit)
REF AD x 10	Refrigerant circuit address Switch 2	Refrigerant circuit address (the second digit)

FUNCTION SETTING

● RC AD setting

●Remote controller address switch

When the indoor unit is wired by remote controller group, to identity the indoor unit in the remote controller group, the number (remote controller address) in the remote controller group is set.

i) 3 wire type

Only for manual address setting

Set the remote controller address in the 0.1.2,~,15 order (Blank is not allowed)

REMOTE CONTROLLER ADDRESS SWITCH (Factory setting : 0)

Rotary SW	Description	Remarks
RC AD	Remote controller address	Remote controller address

ii) 2 wire type

It can choose either automatic address setting or manual address setting.

① When setting the automatic address.

Set the remote controller address in the "0" only. (Factory setting is "0")

② When setting the manual address.

Set the remote controller address in the 1.2,~,15

REMOTE CONTROLLER ADDRESS SWITCH (Factory setting : 0)

Rotary SW	Description	Remarks
RC AD	Remote controller address	Remote controller address

Note: When setting the manual address, can not be set the "0".

FUNCTION SETTING

2-3. INDOOR UNIT (setting by wireless remote controller)

- This procedure changes to the function settings used to control the indoor unit according to the installation conditions. Incorrect settings can cause the indoor unit malfunction.
- After the power is turned on, perform the “FUNCTION SETTING” according to the installation conditions using the remote controller.
- The settings may be selected between the following two: Function Number or Setting Number.
- Settings will not be changed if invalid numbers or setting numbers are selected.

■ PREPARATION

(1) Turn on the power to the indoor unit.

* By turning on the power indoor units initializes EEV, so make sure the piping air-tight test and vacuuming have been conducted before turning on the power.
* Also check again to make sure no wiring mistakes were made before turning on the power.

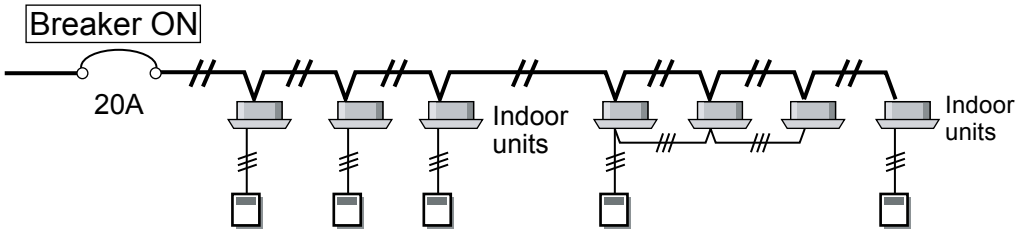

FUNCTION SETTING

■ SWITCHING SELECTION OF FUNCTION SETTING MODE

(2) Press and hold the “MANUAL/AUTO” button for 3 seconds.

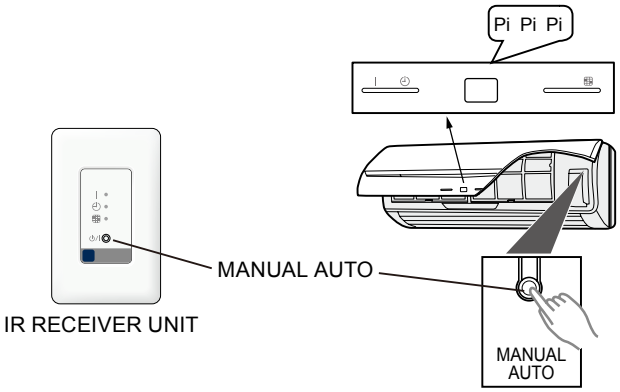

(3) Press and hold the “FAN” and the “ SET TEMP. ▲ ” buttons. Whilst holding these 2 buttons, press the "RESET" button.

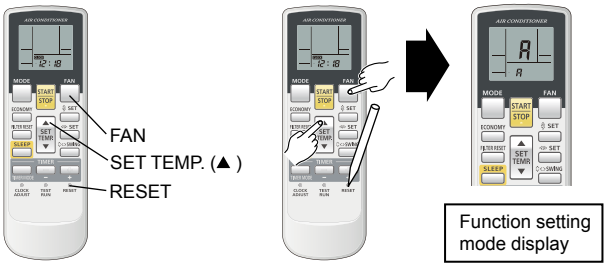

- The position of the “MANUAL/AUTO” button varies depending on the model. Refer to the operation manual for the position that is included with the unit.
- The error will be displayed by continuosly pressing the "MANUAL/AUTO" for 10 sec or more. In this case release the button or turn off the power.
- An explanation of the displayed information as shown below.

■ SELECTION AND CONFIRMATION OF CUSTOM CODE

(4) Press the “ SET TEMP. ▲ ” or “ SET TEMP. ▼ ” buttons to select the custom code that matches the setting with the indoor unit.By selecting the appropriate custom code, the communication between the indoor unit and the wireless RC become possible.



The initial setting is "A"

(5) Press the “TIMER MODE" button to send the code to the indoor unit.

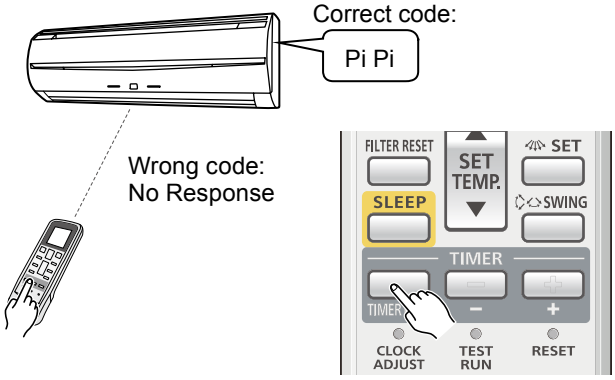

FUNCTION SETTING

■ BUTTON NAME AND FUNCTION

● During address setting mode, indoor unit reject the any operation command from remote controller.

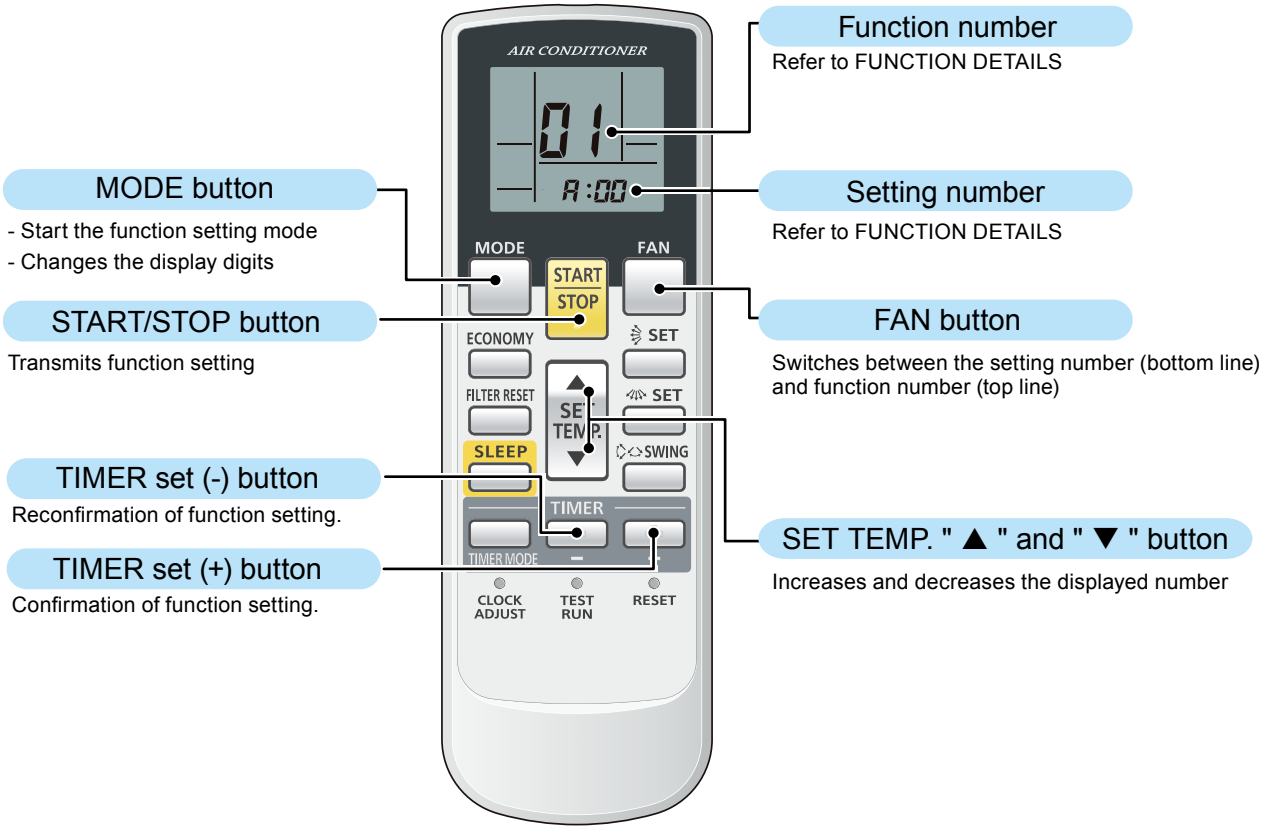

IR RECEIVER UNIT

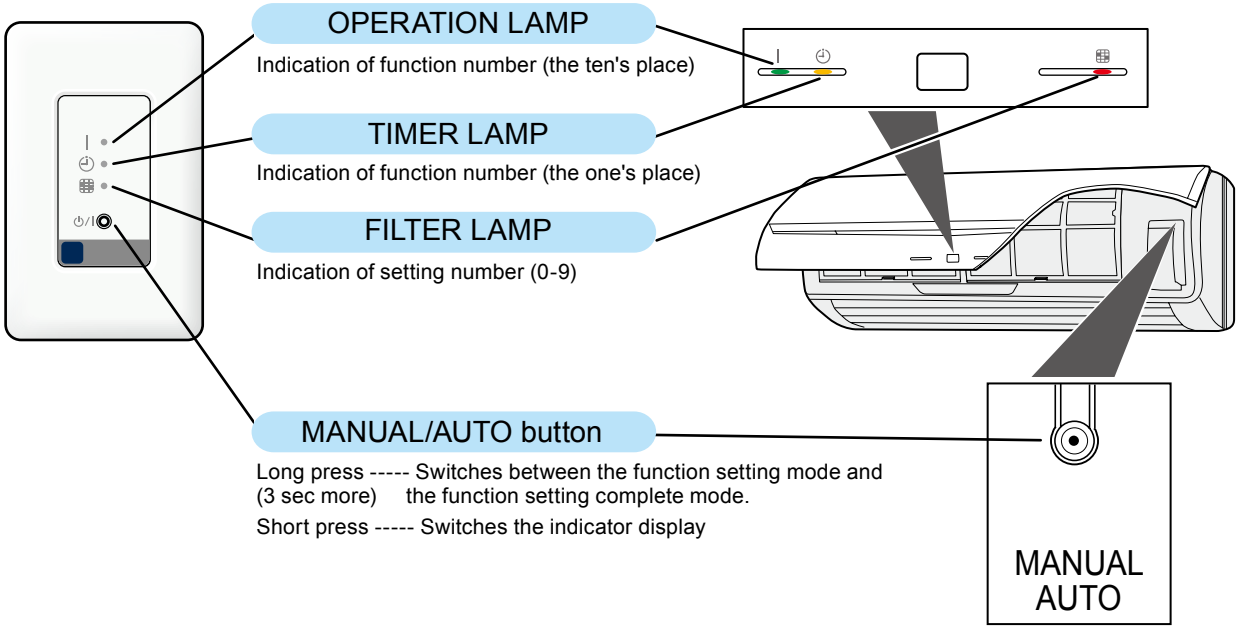

FUNCTION SETTING

■ FUNCTION SETTING

(6) Press the “MODE” button to access the function setting mode.

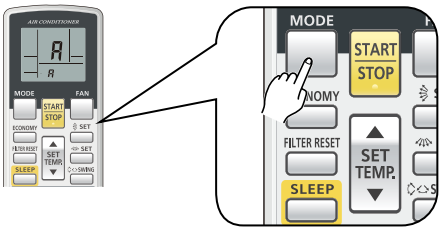

(7) Press the “ ▲ ” or the “ ▼ ” buttons to select the function number.

Each time the “MODE” button is pressed, it switches between the one's place and the ten's place positions.

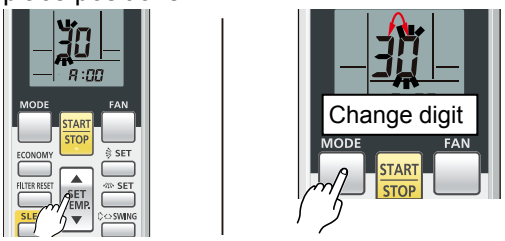

(8) Press the "FAN" button to proceed to setting the number. (Press the "FAN" button again to return to the function number selection.)



(9) Press the “ ▲ ” or the “ ▼ ” buttons to select the setting number.

Each time the “MODE” button is pressed, it switches between the one's place and the ten's place positions.

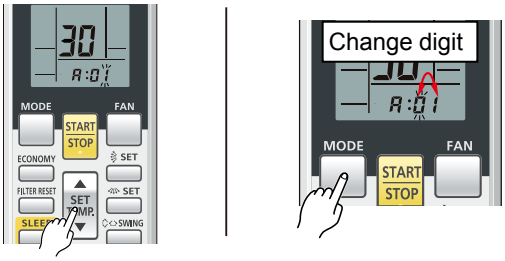

(10) Press the “START/STOP” button once to send the information. A beeping sound will be heard if the command is accepted.

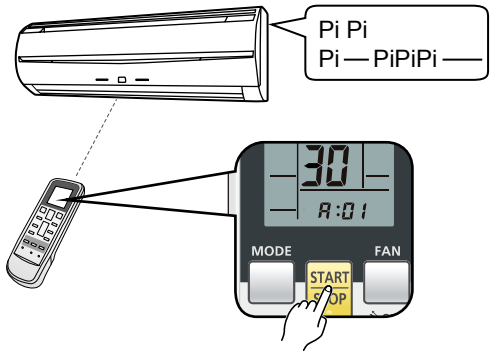

＊In the following cases the setting signal is not read and a buzzer sounds.

The function setting No. is set out of range
: Pi Pi Pi Pi Pi

Case1 : When setting number is one digit.

(11-1) Indoor unit will display the function setting number on "OPERATION"(GREEN), "TIMER ◴ "(ORANGE) and "FILTER ▦ "(RED) light.

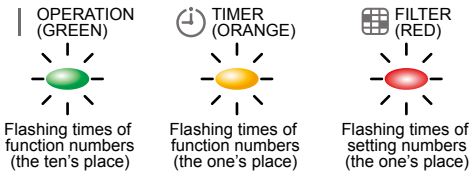

(Example) Function number : 30, Setting number : 01

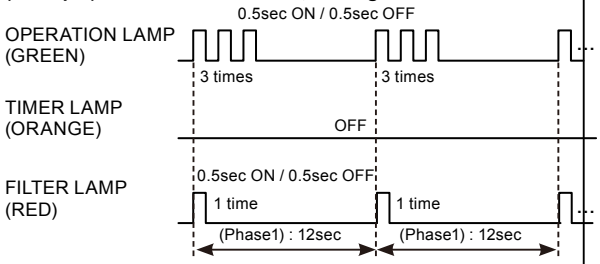

＊ Number 0 setting will not indicate TIMER LAMP and FILTER LAMP.

FUNCTION SETTING

FUNCTION SETTING

Case2 : When setting number is two digits.

(11-2) Indoor unit will display the function setting number on "OPERATION"(GREEN), "TIMER" "(ORANGE) and "FILTER" "(RED) light.

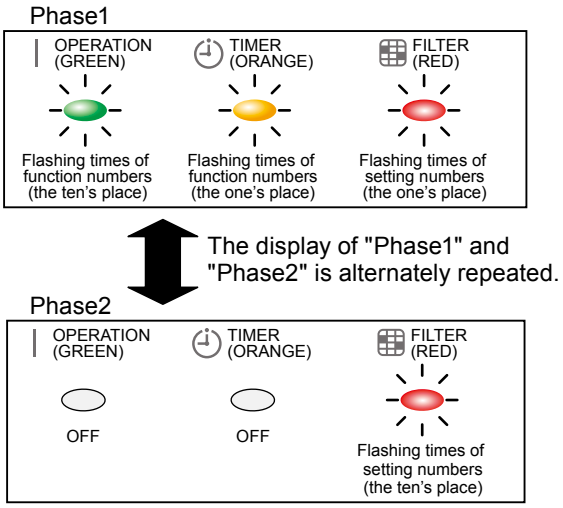

(Example) Function number : 26, Setting number : 31

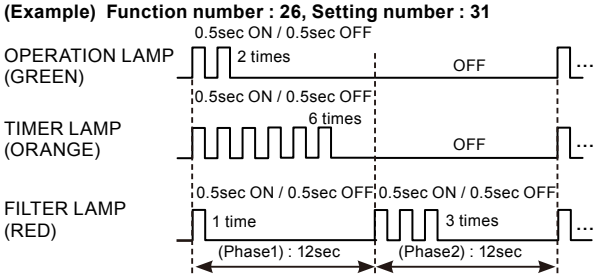

∗ Number 0 setting will not indicate TIMER LAMP and FILTER LAMP.

● Confirmation of function setting

(12) Press the "TIMER set (+)" button.

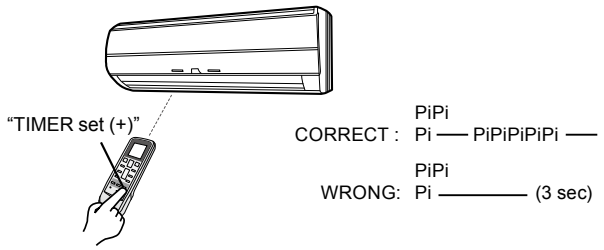

■ FUNCTION DETAILS

Refer to 2-7. FUNCTION DETAILS.

FUNCTION SETTING

■ COMPLETION OF FUNCTION SETTING MODE

(13) Press and hold the “MANUAL/AUTO I/O” button for 3 seconds.

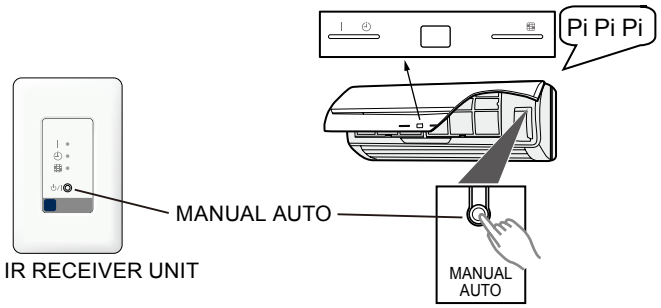

∗ Each LED light brightness is darkening though the content of the display doesn't change.

(14) Press the “RESET” button.

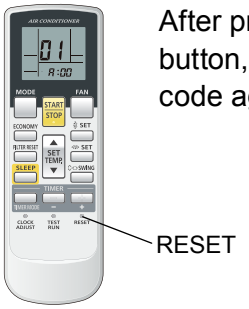

After pressing the RESET button, please set the custom code again if b,c,d setting.

∗ The function setting signal is not received after switched function setting completion mode. (Pi Pi Pi Pi Pi)
∗ Press the "MANUAL/AUTO I/O" button again for 3 sec to return to if required to return the function setting mode.

■ RECONFIRMATION OF FUNCTION SETTING

(15) Press and hold the “FAN” and the “ SET TEMP. ▲ ” buttons. Whilst holding these 2 buttons, press the "RESET" button.

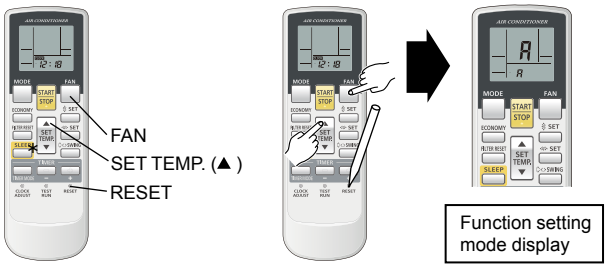

(16) Function number to be confirmed is displayed.
Refer to (7).
Press the “TIMER set (-)” button.

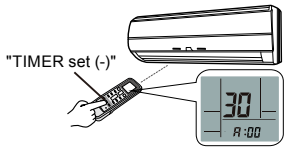

Case1 : When setting number is one digit.

(Example) Function number : 30, Setting number : 01

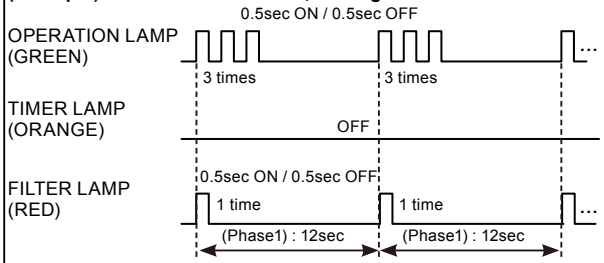

Case2 : When setting number is two digits.

(Example) Function number : 26, Setting number : 31

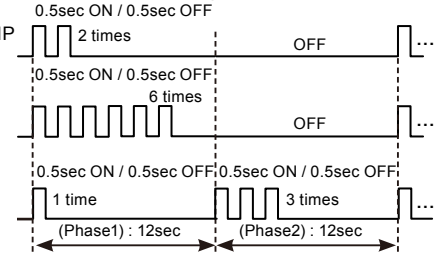

FUNCTION SETTING

■ SETTING UP EACH INDOOR UNIT

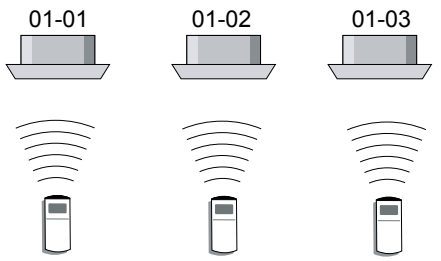

Repeat steps (1) through to (16). Steps (1) through to (5) and (13) to (16) only need to carried out if the custom code is different to the factory setting of “A”.

■ RESET THE POWER AFTER SETTING UP FUNCTION OF ALL INDOOR UNITS

Important

- **If the reset is not performed, function can not be read in normally.**
- **After all the functions have been set, the circuit breaker needs to be switched off for at least 2 minutes.**
  After the 2 minutes has passed, power can be restored.
- **The set function is stored in the PCB and will remain in memory even when the power is turned off.**
  However setting function is effective after power reset.
  Record the function set in the indoor unit on a label, etc., and affix the label to the unit so it can be used for after-sales service operations.

∗ Number 0 setting will not indicate TIMER LAMP and FILTER LAMP.

∗ Once the "RESET" button is pressed on the remote controller, the OPERATION MODE will be set in the "AUTO MODE".
Please adjust the OPERATION MODE to either "COOLING" or "HEATING" before trying to operate the air conditioner.

∗ Note : If CUSTOM CODE is set to anything other than "A" ,the remote control must be set accordingly to the INDOOR UNIT setting.

FUNCTION SETTING

2-4. INDOOR UNIT (setting by wired remote controller)

- This procedure changes to the function settings used to control the indoor unit according to the installation conditions. Incorrect settings can cause the indoor unit malfunction.
- After the power is turned on, perform the “FUNCTION SETTING” according to the installation conditions using the remote controller.
- The settings may be selected between the following two: Function Number or Setting Number.
- Settings will not be changed if invalid numbers or setting numbers are selected.
- This function cannot be used on the slave units.

■ PREPARATION

1) If multiple indoor units are connected to a single wired remote controller, make sure to manually set up the remote controller address (RC AD) on the PCBs of the indoor units. (Refer to 1-3.)
Ex.) When four indoor units are connected

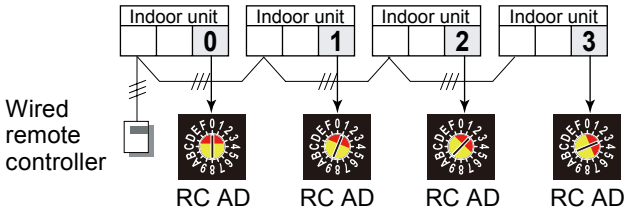

2) Turn on the power to the indoor unit.

- By turning on the power indoor units initializes EEV, so make sure the piping air-tight test and vacuuming have been conducted before turning on the power.
- Also check again to make sure no wiring mistakes were made before turning on the power.

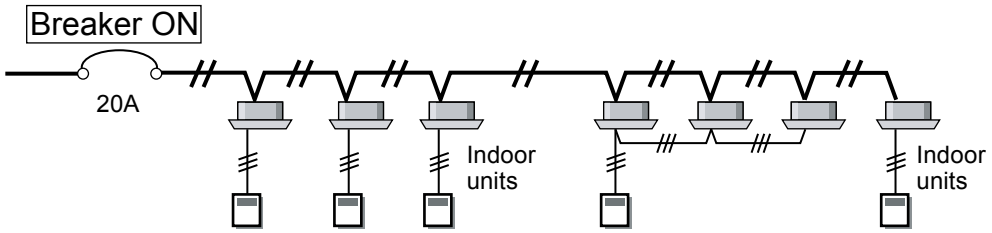

FUNCTION SETTING

■ SWITCHING SELECTION OF FUNCTION SETTING MODE

3) To activate the function setting mode, hold down the three buttons of SET TEMP. V, SET TEMP. Λ and FAN at the same time for 5 seconds or longer.

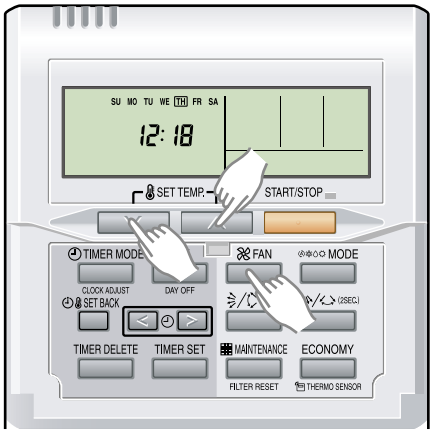

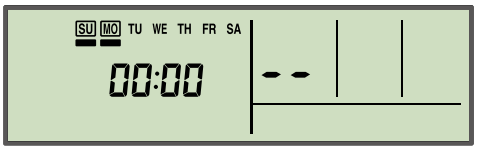

Address setting mode initial display

■ BUTTON NAME AND FUNCTION

- During address setting mode, indoor unit reject the any operation command from remote controller.

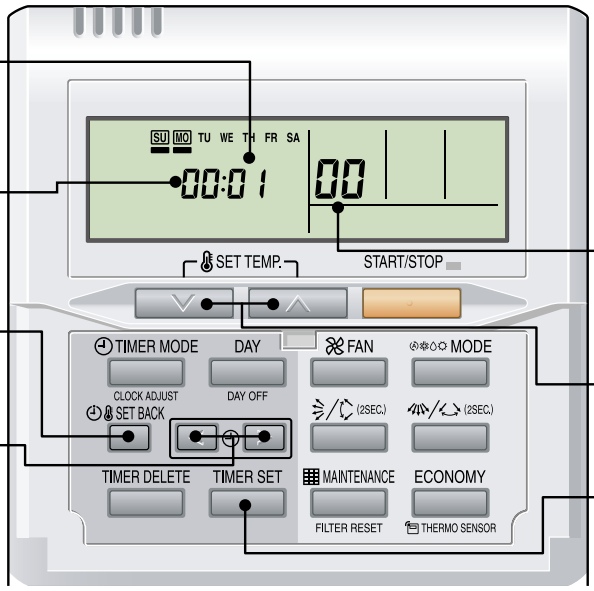

Function number

Refer to FUNCTION DETAILS

Remote controller address

Remote controller address setting number 00-15

SET BACK button

Switches the remote controller address setting number.

SET TIME “<” and “>” button

Switches the function number.

Setting number

Refer to FUNCTION DETAILS

SET TEMP. “V” and “Λ” button

Switches the setting number.

TIMER SET button

Transmits function setting

FUNCTION SETTING

■ FUNCTION SETTING

4) Pressing the SET BACK button, select a remote controller address (select the indoor unit you want to operate)

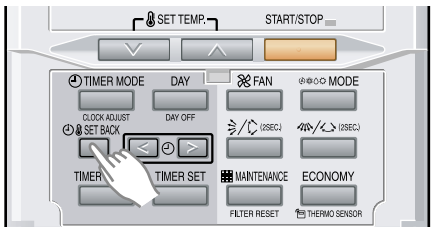

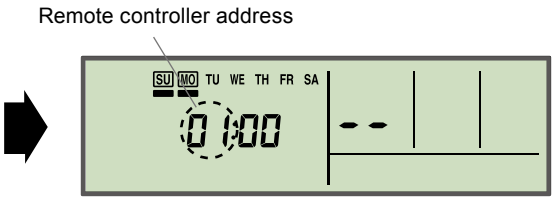

Ex.) When remote controller address “01” is selected

5) Pressing the SET TIME < button or the SET TIME > button, to select the function number.

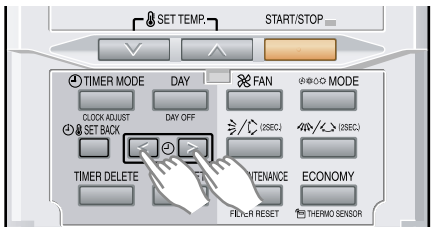

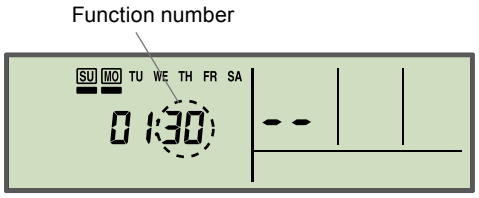

6) Pressing the SET TEMP. V button or the SET TEMP. Λ button, to select the setting number. The display flashes during setting number selection.

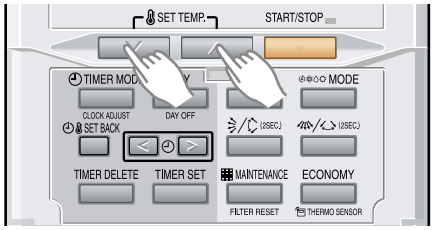

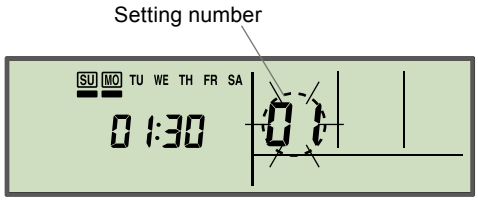

Ex.) Function number : 30, Setting number : 01

7) Pressing the TIMER SET button, confirm the setting.
(The data will be transferred to the indoor unit.)

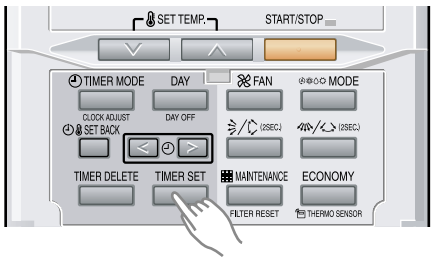

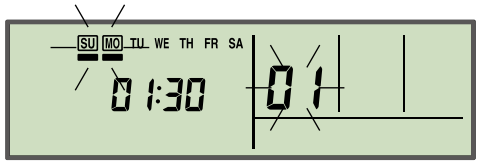

ERROR

GOOD

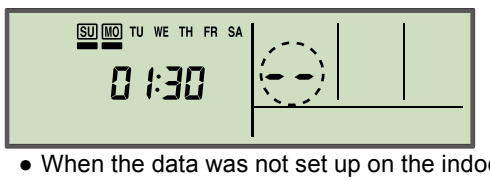

- When the data was not set up on the indoor unit (-- is displayed.)
- Set up the data again according to the procedure in step 5), 6) above.

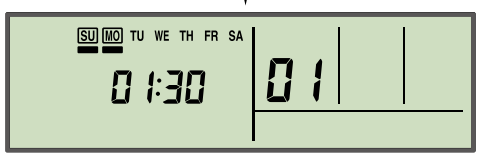

When the data was normally set up on the indoor unit
(Flashing display changes to illuminated display.)

■ FUNCTION DETAILS

Refer to 2-7. FUNCTION DETAILS.

FUNCTION SETTING

■ COMPLETION OF FUNCTION SETTING MODE

8) To clear the function setting mode and return to the regular display, hold down the three buttons of SET TEMP. V, SET TEMP. Λ and FAN at the same time.

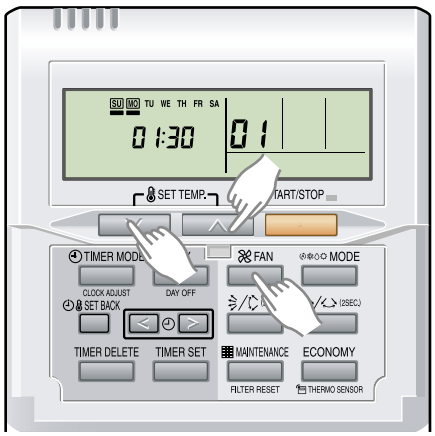

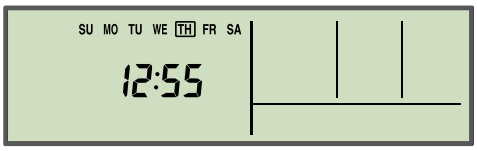

Normal mode display

∗ If no key entry is made for 60 seconds, even though none of the above buttons is pressed, the function setting mode will automatically be cleared.
(If the function setting mode is automatically cleared while setting addresses, activate the mode again according to the procedure in step 3) above.)

■ SETTING UP EACH INDOOR UNIT

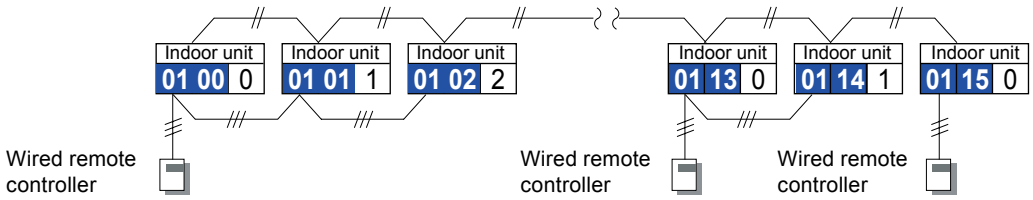

Repeat the procedures in steps 1) through 8), and set up the indoor units requiring function setting.

■ RESET THE POWER AFTER SETTING UP FUNCTION OF ALL INDOOR UNITS

Important

∗ If the reset is not performed, function can not be read in normally.
∗ After all the functions have been set, the circuit breaker needs to be switched off for at least 2 minutes.
After the 2 minutes has passed, power can be restored.
∗ The set function is stored in the PCB and will remain in memory even when the power is turned off.
However setting function is effective after power reset.
Record the function set in the indoor unit on a label, etc., and affix the label to the unit so it can be used for after-sales service operations.

FUNCTION SETTING

2-5. INDOOR UNIT (setting by simple remote controller)

- This procedure changes to the function settings used to control the indoor unit according to the installation conditions. Incorrect settings can cause the indoor unit malfunction.
- After the power is turned on, perform the “FUNCTION SETTING” according to the installation conditions using the remote controller.
- The settings may be selected between the following two: Function Number or Setting Number.
- Settings will not be changed if invalid numbers or setting numbers are selected.
- This function cannot be used on the slave units.

■ PREPARATION

1) If multiple indoor units are connected to a single simple remote controller, make sure to manually set up the remote controller address (RC AD) on the PCBs of the indoor units. (Refer to 1-3.)
Ex.) When four indoor units are connected

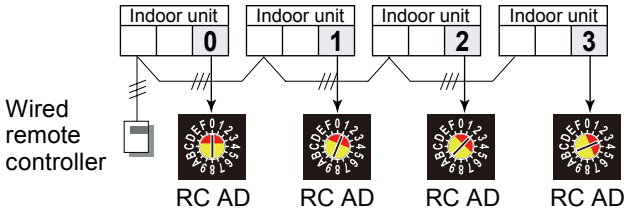

2) Turn on the power to the indoor unit.

- By turning on the power indoor units initializes EEV, so make sure the piping air-tight test and vacuuming have been conducted before turning on the power.
- Also check again to make sure no wiring mistakes were made before turning on the power.

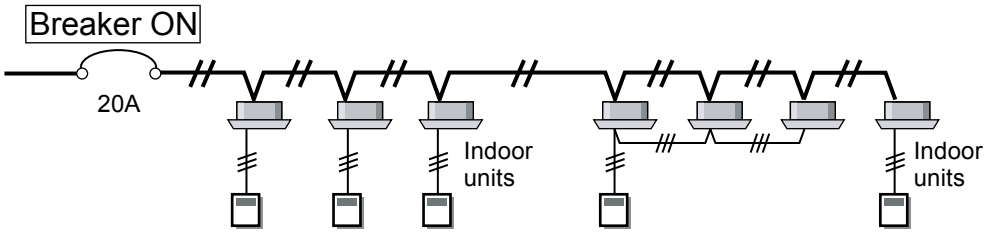

FUNCTION SETTING

FUNCTION SETTING

■ SWITCHING SELECTION OF FUNCTION SETTING MODE

3) To activate the function setting mode, hold down the three buttons of SET TEMP. ▼, SET TEMP. ▲ and FAN at the same time for 5 seconds or longer.

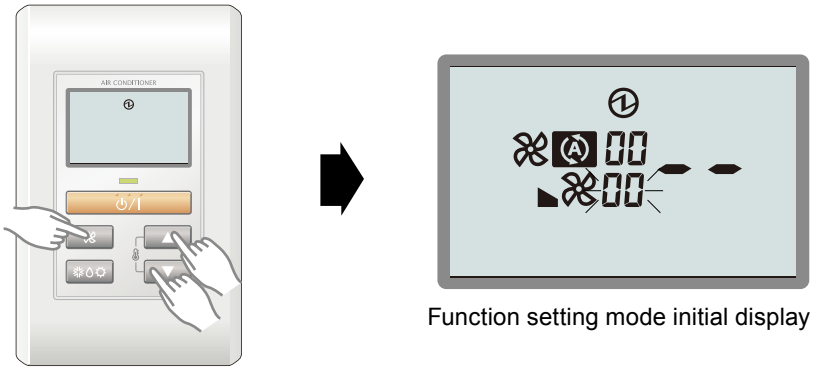

Function setting mode initial display

■ BUTTON NAME AND FUNCTION

- During function setting mode, indoor unit reject the any operation command from remote controller.

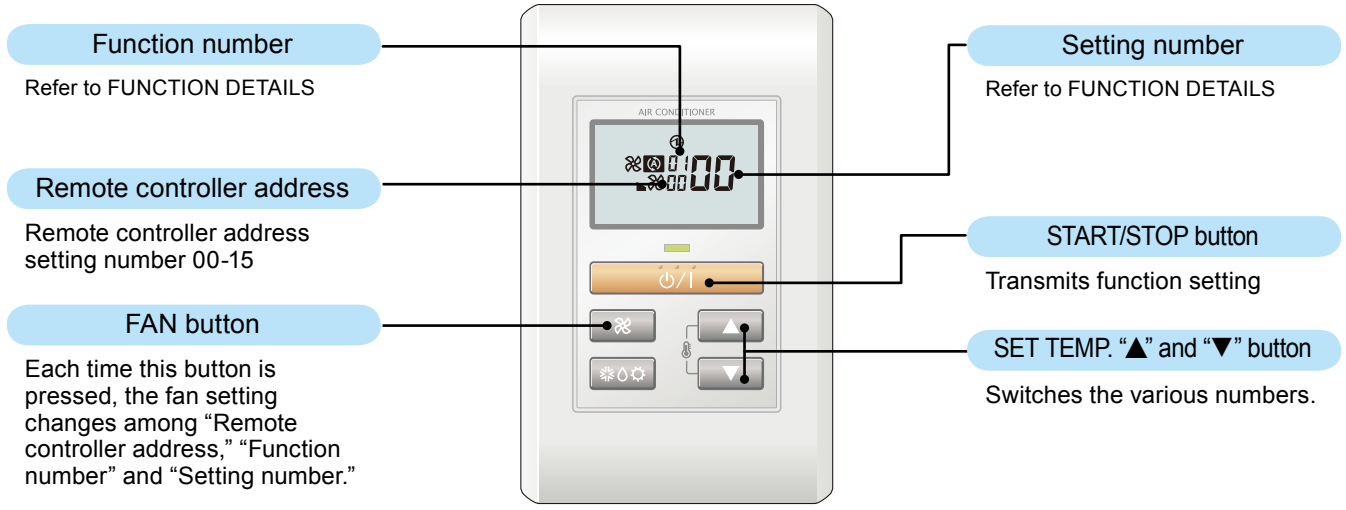

UTY-RSK* (With operation mode)

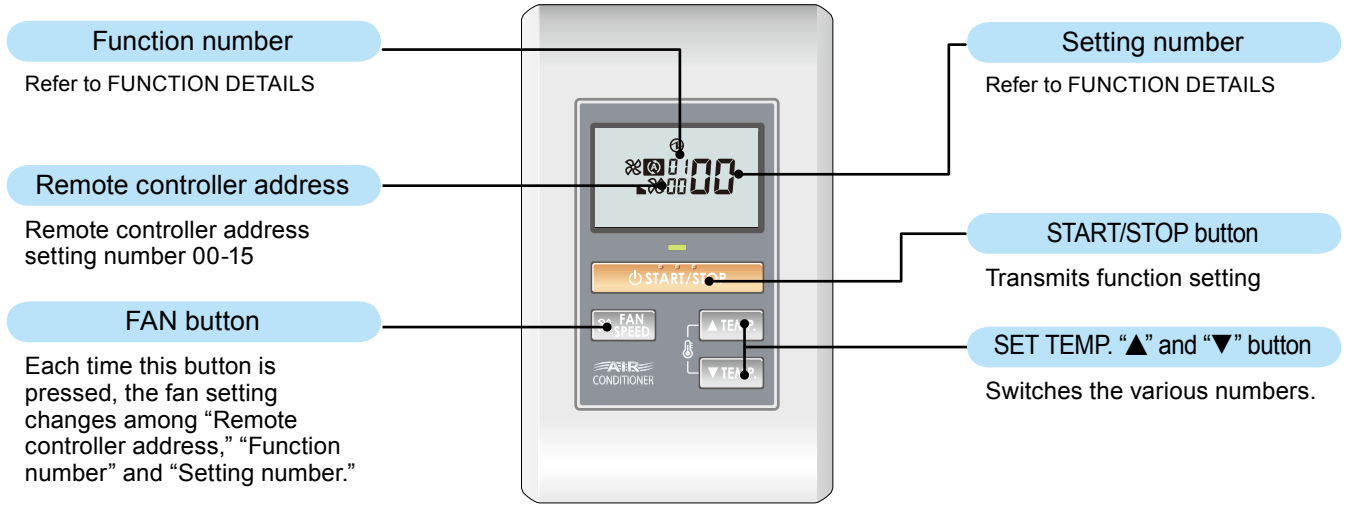

UTY-RHK* (Without operation mode)

FUNCTION SETTING

■ FUNCTION SETTING

4) Pressing the SET TEMP. ▲ button or SET TEMP. ▼ button, select a remote controller address (select the indoor unit you want to operate).

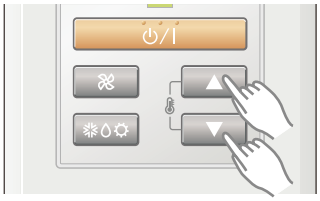

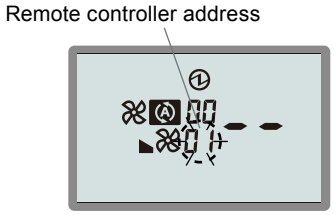

Ex.) When remote controller address “01” is selected

5) Press the FAN button so that the “Function number” display flashes. Then, press either the SET TEMP. ▲ button or the SET TEMP. ▼ button to set up the function number.

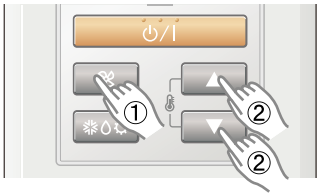

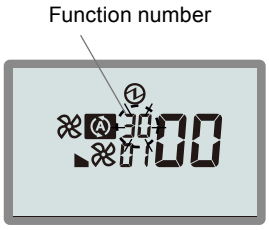

6) Press the FAN button so that the “Setting number” display flashes. Then, press either the SET TEMP. ▲ button or the SET TEMP. ▼ button to set up the setting number.

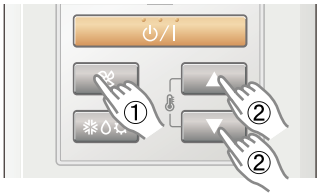

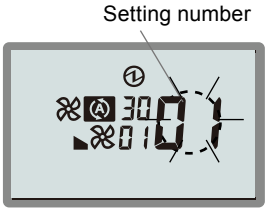

Ex.) Function number : 30, Setting number : 01

7) Pressing the START/STOP button, confirm the setting.
(The data will be transferred to the indoor unit.)





ERROR

GOOD

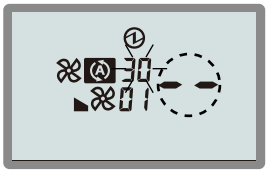



- When the data was not set up on the indoor unit (-- is displayed.)
- Set up the data again according to the procedure in step 5), 6) above.

When the data was normally set up on the indoor unit.

■ FUNCTION DETAILS

Refer to 2-7. FUNCTION DETAILS.

FUNCTION SETTING

■ COMPLETION OF FUNCTION SETTING MODE

8) Press the three buttons of SET TEMP. ▲, SET TEMP. ▼ and FAN at the same time for 5 seconds or longer. The function setting mode will be cleared and the regular display will be restored.

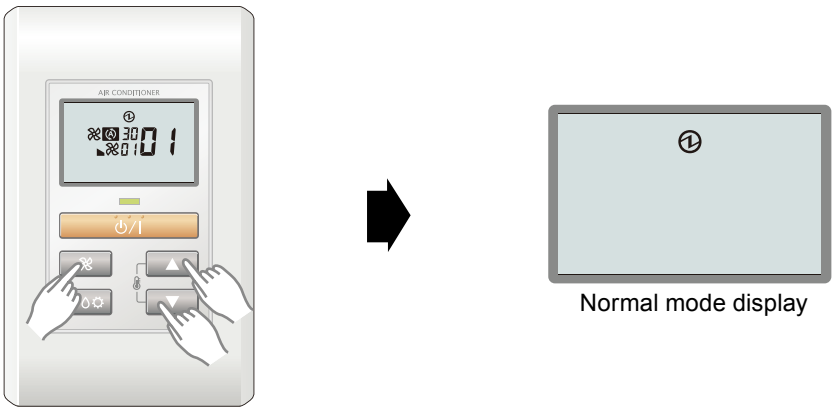

∗ If no key entry is made for 60 seconds, even though none of the above buttons is pressed, the function setting mode will automatically be cleared.
(If the function setting mode is automatically cleared while setting addresses, activate the mode again according to the procedure in step 3) above.)

■ SETTING UP EACH INDOOR UNIT

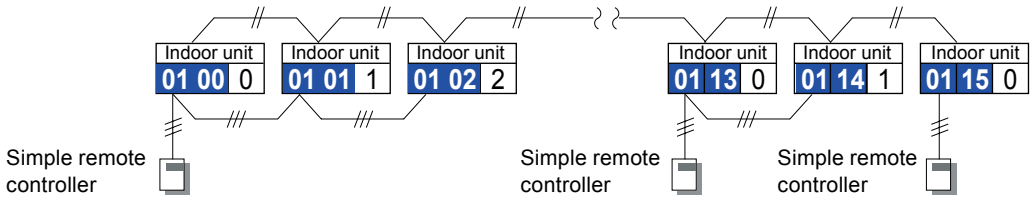

Repeat the procedures in steps 1) through 8), and set up the indoor units requiring function setting.

■ RESET THE POWER AFTER SETTING UP FUNCTION OF ALL INDOOR UNITS

Important

∗ If the reset is not performed, function can not be read in normally.
∗ After all the functions have been set, the circuit breaker needs to be switched off for at least 2 minutes.
After the 2 minutes has passed, power can be restored.
∗ The set function is stored in the PCB and will remain in memory even when the power is turned off.
However setting function is effective after power reset.
Record the function set in the indoor unit on a label, etc., and affix the label to the unit so it can be used for after-sales service operations.

FUNCTION SETTING

2-6. INDOOR UNIT (setting by wired remote controller [Touch panel])

- This procedure changes to the function settings used to control the indoor unit according to the installation conditions. Incorrect settings can cause the indoor unit malfunction.
- After the power is turned on, perform the “FUNCTION SETTING” according to the installation conditions using the remote controller.
- The settings may be selected between the following two: Function Number or Setting Number.
- Settings will not be changed if invalid numbers or setting numbers are selected.
- This function cannot be used on the slave units.

■ PREPARATION

1) When multiple indoor units are connected to a single wired remote controller.

1-1) When setting of Remote controller address in "Automatic address setting"

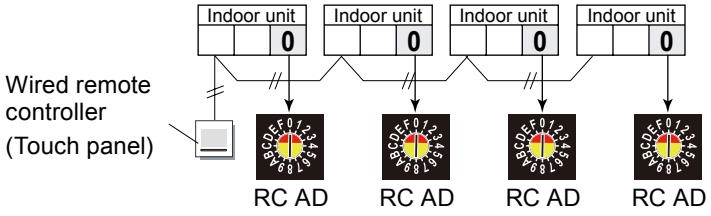

1-2) When setting of Remote controller address in "Manual address setting", make sure to manually set up the remote controller address (RC AD) on the PCBs of the indoor units and Wired remote controller (Touch panel). (Refer to 1-3.)

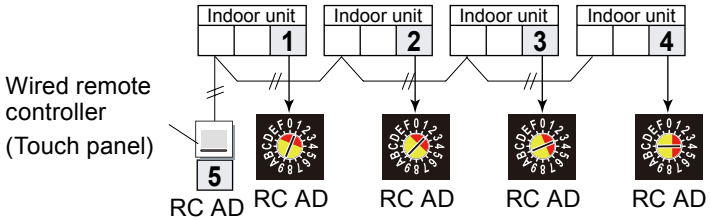

2) Turn on the power to the indoor unit.

- By turning on the power indoor units initializes EEV, so make sure the piping air-tight test and vacuuming have been conducted before turning on the power.
- Also check again to make sure no wiring mistakes were made before turning on the power.

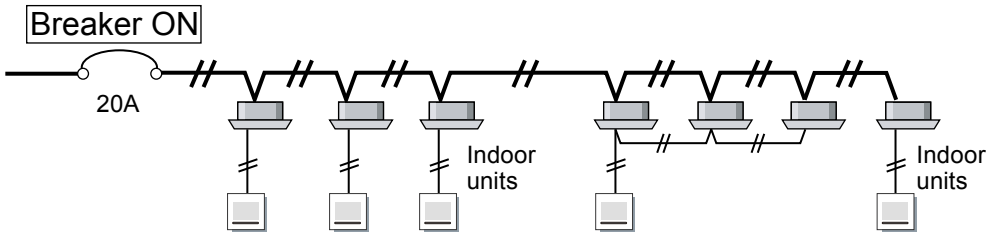

FUNCTION SETTING

■ SWITCHING SELECTION OF ADDRESS SETTING MODE

3) When the [Function Setting] on the “Maintenance” screen is touched, the “Installer Password Verification” screen is displayed.
Enter the Installer Password, and touch the [OK]. “Function Setting” screen is displayed.

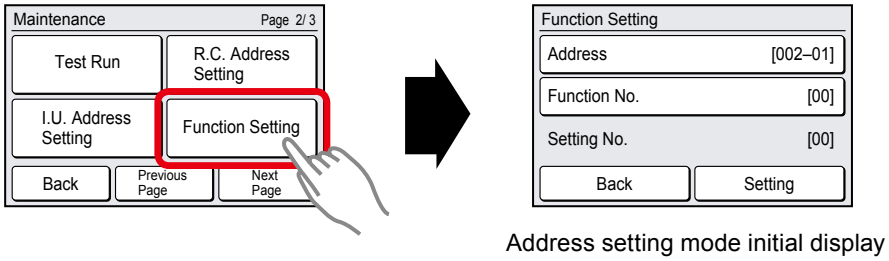

Address setting mode initial display

■ FUNCTION SETTING

4) Touch the [Address] on the “Function Setting” screen.

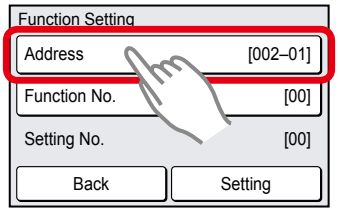

5) “Address” screen is displayed. Select the address of the indoor unit whose function number is to be set by touching [▲] or [▼]. When setting at all the indoor units, touch [All].

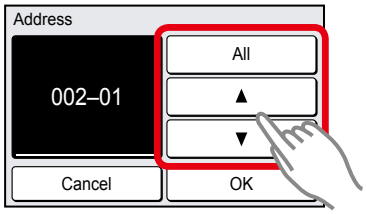

When the [OK] is touched, the display returns to the “Function Setting” screen.

6) Touch the [Function No.] on the “Function Setting” screen.

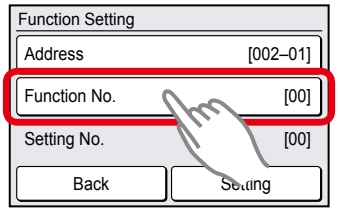

7) “Function No.” screen is displayed. Set the Function No. with the [▲] or [▼].

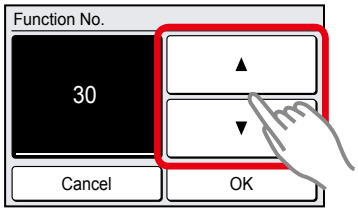

When the [OK] is touched, the display returns to the “Function Setting” screen.

FUNCTION SETTING

8)Touch the [Setting] on the “Function Setting” screen.

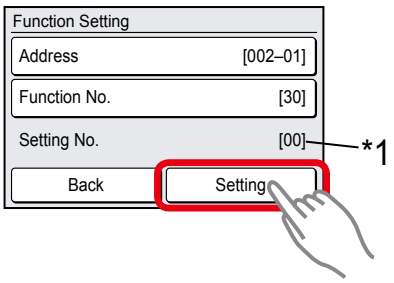

Note: *1 When All is chosen by 5), and different set up "Setting No." from two or more indoor units, [-] is displayed on "Setting No."

9) Setting screen of “Setting No.” is displayed. Set the Setting No. with the [▲] or [▼].

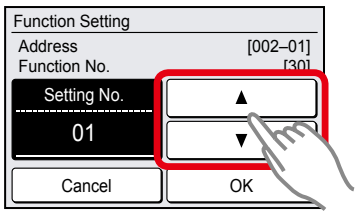

Ex.) Function number: 30, Setting number: 01
When the [OK] is touched, the “Function Setting” verification screen is displayed.

10) Touch the [YES] of the verification screen.

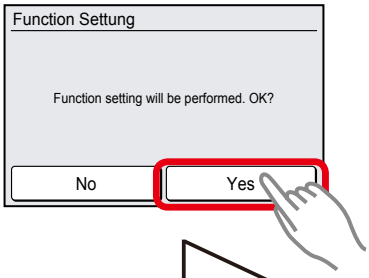

In case of OK

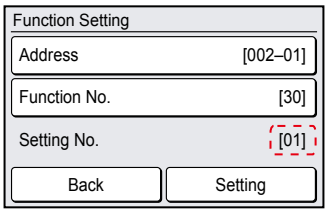

When the data was normally set up on the indoor unit

In case of ERROR

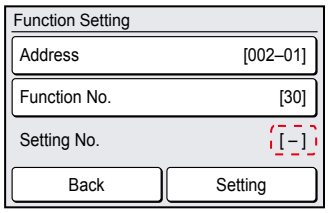

- When the data was not set up on the indoor unit ([-] is displayed.)
- Set up the data again according to the procedure in step 6) to 9) above

FUNCTION SETTING

FUNCTION SETTING

■ FUNCTION DETAILS

Refer to 2-7. FUNCTION DETAILS.

■ COMPLETION OF ADDRESS SETTING MODE

11) When the [Back] on the “Function Setting” screen is touched, the display returns to the “Maintenance” screen.

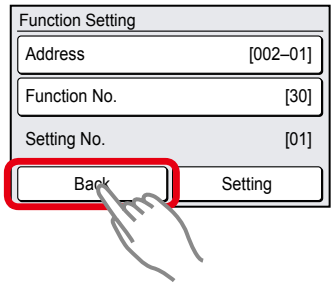

■ SETTING UP EACH INDOOR UNIT

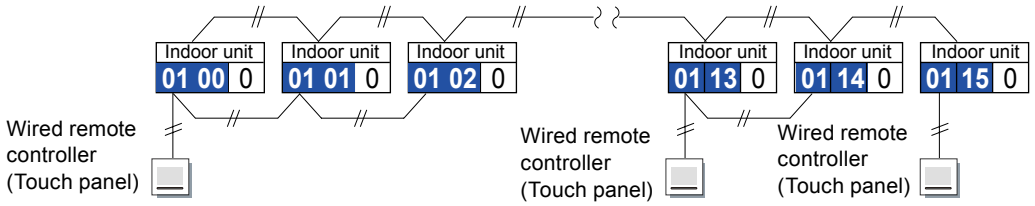

Repeat the procedures in steps 1) through 11), and set up the indoor units requiring address setting.

■ RESET THE POWER AFTER SETTING UP ADDRESS OF ALL INDOOR UNITS

Important

∗ If the reset is not performed, address can not be read in normally.
∗ After all the addresses have been set, the circuit breaker needs to be switched off for at least 2 minutes.
After the 2 minutes has passed, power can be restored.
∗ The set address is stored in the PCB and will remain in memory even when the power is turned off.
However setting address is effective after power reset.
Record the address set in the indoor unit on a label, etc., and affix the label to the unit so it can be used for after-sales service operations.

FUNCTION SETTING

2-7. FUNCTION DETAILS

<table>
<tr><th>Function</th><th>Function number</th><th colspan="2">Setting number</th><th>Default</th><th>Details</th></tr>
<tr><td rowspan="3">Filter indicator interval</td><td rowspan="3">11</td><td>00</td><td>Default</td><td>●</td><td rowspan="3">Adjust the filter cleaning interval notification. If the notification is too early, change to setting 01. If the notification is too late, change to setting 02.</td></tr>
<tr><td>01</td><td>Longer</td><td></td></tr>
<tr><td>02</td><td>Shorter</td><td></td></tr>
<tr><td rowspan="3">Filter indicator action</td><td rowspan="3">13</td><td>00</td><td>Enable</td><td>●</td><td rowspan="3">Enable or disable the filter indicator. Setting 02 is for use with a central remote control.</td></tr>
<tr><td>01</td><td>Disable</td><td></td></tr>
<tr><td>02</td><td>Display only on central remote control</td><td></td></tr>
<tr><td rowspan="2">Ceiling airflow</td><td rowspan="2">20</td><td>00</td><td>Default</td><td>●</td><td rowspan="2">Regulate the airfl ow according to the needs of the installation location. When set to 01, the air flow will be stronger. (Cassette type only)</td></tr>
<tr><td>01</td><td>High Ceiling</td><td></td></tr>
<tr><td rowspan="2">Vertical airflow direction</td><td rowspan="2">23</td><td>00</td><td>Default</td><td>●</td><td rowspan="2">Adjust the vertical airflow direction. All airflow direction louvers are adjusted together.
(Cassette type only)</td></tr>
<tr><td>01</td><td>Raise</td><td></td></tr>
<tr><td rowspan="3">Horizontal swing airflow direction</td><td rowspan="3">24</td><td>00</td><td>Default</td><td>●</td><td rowspan="3">Adjust the horizontal swing airflow direction.
(For horizontal swing equipped models)</td></tr>
<tr><td>01</td><td>Left half</td><td></td></tr>
<tr><td>02</td><td>Right half</td><td></td></tr>
<tr><td rowspan="15">Static pressure</td><td rowspan="15">26</td><td>00</td><td>SP mode 00</td><td></td><td rowspan="15">(Slim duct type and Medium static pressure duct type only)
<table>
<tr><th>Model name</th><th>Range of static pressure</th><th>Normal static pressure</th></tr>
<tr><td>ARXD04GALH</td><td rowspan="6">SP mode 00 to 09 (0 to 90 Pa)</td><td rowspan="7">25Pa</td></tr>
<tr><td>ARXD07GALH</td></tr>
<tr><td>ARXD09GALH</td></tr>
<tr><td>ARXD12GALH</td></tr>
<tr><td>ARXD14GALH</td></tr>
<tr><td>ARXD18GALH</td></tr>
<tr><td>ARXD24GALH</td><td>SP mode 00 to 05 (0 to 50 Pa)</td></tr>
<tr><td>ARXA24GBLH</td><td rowspan="2">SP mode 00 to 14</td><td>40Pa</td></tr>
<tr><td>ARXA30GBLH</td><td rowspan="2">50Pa</td></tr>
<tr><td>ARXA36GBLH</td><td>SP mode 00 to 12</td></tr>
<tr><td>ARXA45GBLH</td><td>SP mode 00 to 11</td><td>60Pa</td></tr>
</table></td></tr>
<tr><td>01</td><td>SP mode 01</td><td></td></tr>
<tr><td>02</td><td>SP mode 02</td><td></td></tr>
<tr><td>03</td><td>SP mode 03</td><td></td></tr>
<tr><td>04</td><td>SP mode 04</td><td></td></tr>
<tr><td>05</td><td>SP mode 05</td><td></td></tr>
<tr><td>06</td><td>SP mode 06</td><td></td></tr>
<tr><td>07</td><td>SP mode 07</td><td></td></tr>
<tr><td>08</td><td>SP mode 08</td><td></td></tr>
<tr><td>09</td><td>SP mode 09</td><td></td></tr>
<tr><td>10</td><td>SP mode 10</td><td></td></tr>
<tr><td>11</td><td>SP mode 11</td><td></td></tr>
<tr><td>12</td><td>SP mode 12</td><td></td></tr>
<tr><td>13</td><td>SP mode 13</td><td></td></tr>
<tr><td>14</td><td>SP mode 14</td><td></td><td rowspan="2">Please refer to "Chapter04 7.FAN PERFORMANCE CURVE" for the characteristics of each indoor unit.</td></tr>
<tr><td>31</td><td>Normal SP</td><td>●</td></tr>
<tr><td rowspan="3">Cool air temperature trigger</td><td rowspan="3">30</td><td>00</td><td>Default</td><td>●</td><td rowspan="3">Adjust the cool air trigger temperature. To lower the trigger temperature, use setting 01. To raise the trigger temperature, use setting 02.</td></tr>
<tr><td>01</td><td>Adjust (1)</td><td></td></tr>
<tr><td>02</td><td>Adjust (2)</td><td></td></tr>
<tr><td rowspan="4">Heat air temperature trigger</td><td rowspan="4">31</td><td>00</td><td>Default</td><td>●</td><td rowspan="4">Adjust the heat air trigger temperature. To lower the trigger temperature by 6 degrees C, use setting 01. To lower the trigger temperature by 4 degrees C, use setting 02. To raise the trigger temperature, use setting 03.</td></tr>
<tr><td>01</td><td>Adjust (1)</td><td></td></tr>
<tr><td>02</td><td>Adjust (2)</td><td></td></tr>
<tr><td>03</td><td>Adjust (3)</td><td></td></tr>
</table>

FUNCTION SETTING

Function	Function number	Setting number		Default	Details
*1 Auto restart	**40**	**00**	Enable		Enable or disable automatic system restart after a power outage.
		01	Disable	●	
Cool Air Prevention	**43**	**00**	Super low	●	Restrain the cold airflow with making the airflow lower when starting heating operation. To correspond to the ventilation, set to 01.
		01	Follow the setting on the remote controller		
External control	**46**	**00**	Start/Stop	●	Allow an external controller to start or stop the system, or to perform an emergency stop, or to perform a forced stop. * If an emergency stop is performed from an external controller, same refrigerant system will be disabled. *If forced stop is set,indoor unit stops by the input to the external input terminals,and Start/Stop by a remote controller is restricted.
		01	Emergency stop		
		02	Forced stop		
Error report target	**47**	**00**	All	●	Change the target for reporting errors. Errors can either be reported in all locations, or only on the wired remote.
		01	Display only on central remote control		
Fan setting when cooling thermostat OFF	**49**	**00**	Follow the setting on the remote controller	●	When set 00, Indoor unit is continued operation based upon Central remote controller or individual controller set. Once indoor unit received signal from External controller, Indoor unit changed Fan mode forcibly. When set 01, Indoor unit is continued operation based upon Central remote controller or individual controller set. Once indoor unit received signal from External controller, Indoor unit stop forcibly. Connection of the wired remote controller (2-wire type or 3-wire type) and switching its thermistor are necessary.
		01	Stop		

*1 : Auto restart is an emergency function such as for power failure etc.
Do not start and stop the indoor unit by this function in normal operation.
Be sure to operate by the control unit, converter or external input device.

FUNCTION SETTING

2-8. RB UNIT

■ SWITCH POSITION

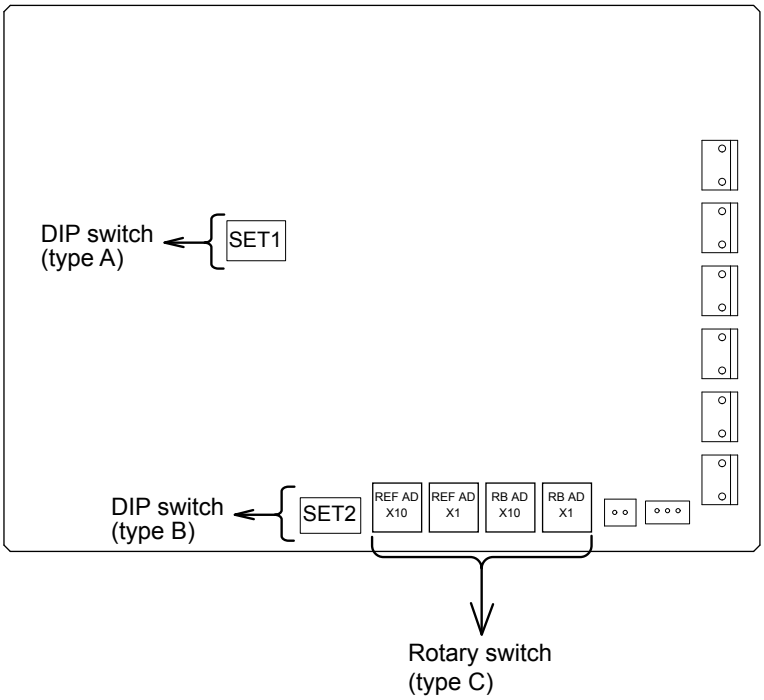

■ SWITCH TYPE

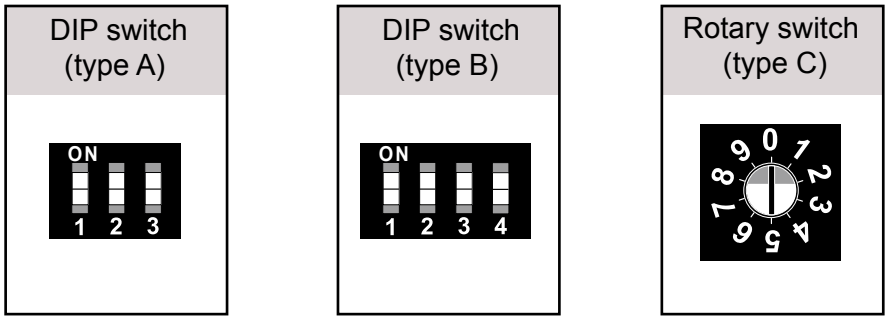

FUNCTION SETTING

■ SWITCH TABLE

DIP-SW	type A	SET1	1	Forbidden
			2	Forbidden
			3	Forbidden
	type B	SET2	1	Operation mode selecting switch 1
			2	Operation mode selecting switch 2
			3	Cool/heat selection control time switch 1
			4	Cool/heat selection control time switch 2
Rotary SW	type C	RB AD x 1		RB unit address switch 1
		RB AD x 10		RB unit address switch 2
		REF AD x1		Refrigerant circuit address switch 1
		REF AD x10		Refrigerant circuit address switch 2

■ DIP SWITCH SETTING

● SET1 setting

●SET1-1, SET1-2, SET1-3 setting forbidden

(◆...Factory setting)

	SET1-1	SET1-2	SET1-3	
◆	OFF	OFF	OFF	Fixed at OFF
	ON	ON	ON	Setting forbidden

● SET2 setting

●Operation mode selecting switch

(◆...Factory setting)

	SET2-1	SET2-2	Description	Remarks
◆	OFF	OFF	Priority given to the first command	Priority is given to the operation mode which is set first.
	ON	OFF	Priority given to external input of RB unit	Priority is given to the operation mode which is set by the external input terminal (CNA01 or CNA02).
	OFF	ON	Priority given to administrative indoor unit	Priority is given to the operation mode of the administrative indoor unit which is set by the wired remote controller
	ON	ON	Setting forbidden	

FUNCTION SETTING

●Cool/heat selection control time switch

This switch is set up to shorten Cool/heat selection control time by RB unit.
If the Cool/heat selection control time is short, the sound of passing refrigerant may be loud during the Cool/heat selection control process.
Please check that there is no influence on use.

(◆...Factory setting)

	SET2-3	SET2-4	Cool/heat selection control time
◆	OFF	OFF	6 min.
	ON	OFF	3 min.
	OFF	ON	Setting forbidden
	ON	ON	Setting forbidden

■ ROTARY SWITCH SETTING

● RB AD setting

●RB unit address switch

Sets the RB unit addresses.

Please see "1-3 address setting" for RB unit address conversion table.

RB UNIT ADDRESS SWITCH (Factory setting RB AD x 1: 0, RB AD x 10: 0)

Rotary SW	Description	Remarks
RB AD x 1	RB unit address Switch 1	RB unit address (the first digit)
RB AD x 10	RB unit address Switch 2	RB unit address (the second digit)

● REF AD setting

●Refrigerant circuit address switch

Sets the refrigerant circuit address.

Please see "1-3 address setting" for refrigerant circuit address conversion table.

REFRIGERANT CIRCUIT ADDRESS SWITCH (Factory setting REF AD x 1: 0, REF AD x 10: 0)

Rotary SW	Description	Remarks
REF AD x 1	Refrigerant circuit address Switch 1	Refrigerant circuit address (the first digit)
REF AD x 10	Refrigerant circuit address Switch 2	Refrigerant circuit address (the second digit)

FUNCTION SETTING

2-9. WIRED, SIMPLE REMOTE CONTROLLER

DIP Switch 1	SW1	Forbidden
	SW2	Dual remote controller setting
	SW3	Forbidden
	SW4	Forbidden
	SW5	Forbidden
	SW6	Memory backup setting (Wired remote controller only)

* Do not use DIP Switch 2 (Wired remote controller)

■ SWITCH POSITION

● Wired remote controller

Model : UTY-RNK∗

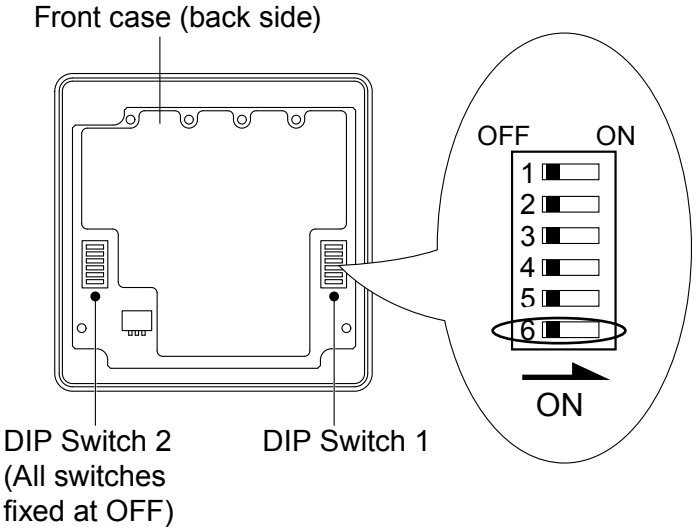

● Simple remote controller

Model : UTY-RSK∗

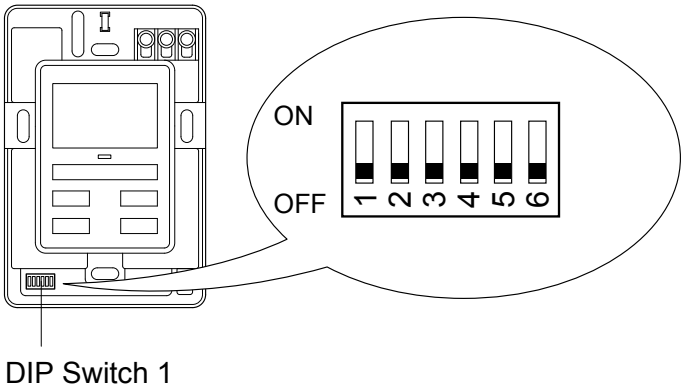

Model : UTY-RHK∗

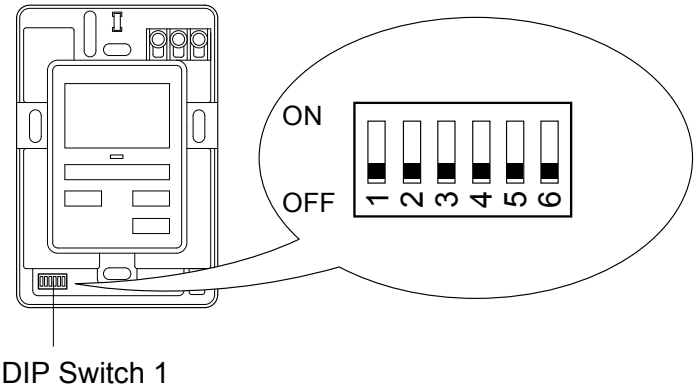

FUNCTION SETTING

FUNCTION SETTING

■ DIP SWITCH 1 SETTING

● SW1 setting forbidden

(◆...Factory setting)

	SW1	
◆	OFF	Fixed at OFF
	ON	Setting forbidden

● SW2 setting

●Dual remote controller setting

Set the remote controller SW2 according to the following table.

(◆...Factory setting)

	Number of remote controller	Master unit	Slave unit
		SW2	SW2
◆	1 (Normal)	OFF	-
	2 (Dual)	OFF	ON

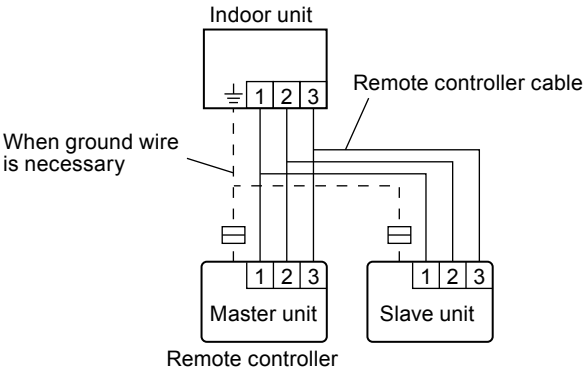

● SW3 setting forbidden

(◆...Factory setting)

	SW3	
◆	OFF	Fixed at OFF
	ON	Setting forbidden

● SW4 setting forbidden

(◆...Factory setting)

	SW4	
◆	OFF	Fixed at OFF
	ON	Setting forbidden

● SW5 setting forbidden

(◆...Factory setting)

	SW5	
◆	OFF	Fixed at OFF
	ON	Setting forbidden

● SW6 setting

●Memory backup setting (Wired remote controller only)

Set to ON to use batteries for the memory backup.

If batteries are not used, all of settings stored in memory will be delete if there is a power failure.

(◆...Factory setting)

	SW6	Memory backup
◆	OFF	Invalidity
	ON	Validity

Never turn it ON in the case of simple remote controller.

FUNCTION SETTING

2-10. GROUP REMOTE CONTROLLER

DIP Switch	SW1	Memory backup setting
	SW2	Forbidden

■ SWITCH POSITION

● Group remote controller

Model : UTY-CGG∗

Front case (back side)

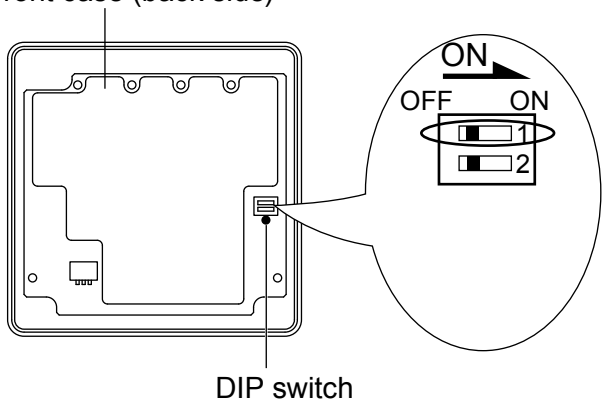

■ DIP SWITCH SETTING

● SW1 setting

●Memory backup setting

If there is a power failure when the memory backup is enabled, the setting stored in the memory will be saved.

(◆...Factory setting)

	SW1	Memory backup
◆	OFF	Invalidity
	ON	Validity

● SW2 setting forbidden

(◆...Factory setting)

	SW2	
◆	OFF	Fixed at OFF
	ON	Setting forbidden

FUNCTION SETTING

■ GROUP REMOTE CONTROLLER ADDRESS SETTING

- Hold down the set time buttons ⩽ and ⩾ simultaneously for two seconds or more to start the setting.

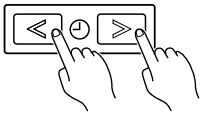

- Press the set time buttons to set the Group remote controller address.

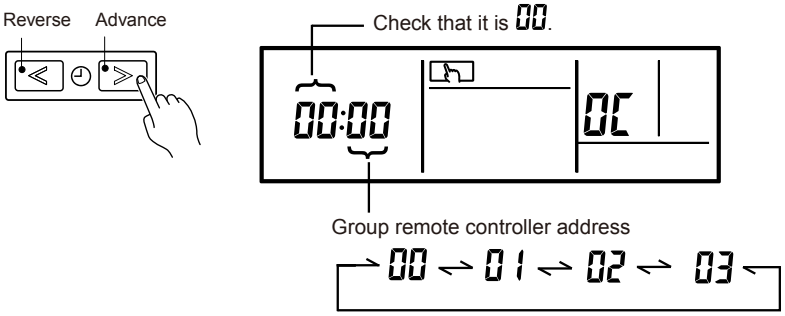

- Press the ENTER button.

Check the ((•)) and 0C flash for two seconds.

- Hold down again the set time buttons ⩽ and ⩾ simultaneously for two seconds or more to complete setting.

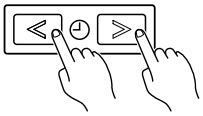

FUNCTION SETTING

2-11. TOUCH PANEL CONTROLLER

■ ADDRESS SETTING

- Display the Installer Setting screen and press "Change" button of "1. The controller Address Number Setting".

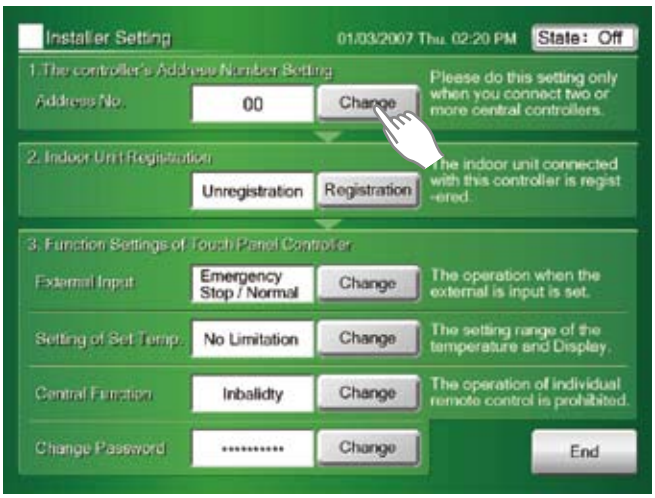

- If it changes to "1. The controller Address Number Setting" screen, press "01" button of Address No., and then press "OK" button.



Ex) When setting the Address Number to "01".

- If it returns to Installer Setting screen, make sure that Address No. is "01", and then end.

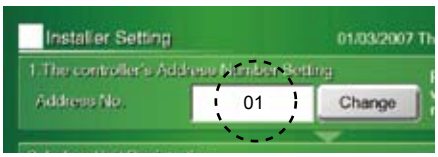

Note:

- **Address No. can be set between "00" and "15". (Up to maximum 16 Touch Panel Controller can be installed to 1 system).**
- **When installing two or more Touch Panel Controller, set up so that Address No. does not overlap.**
- **Please refer to the OPERATING MANUAL of Touch Panel Controller for details.**
- **Please keep Address No. of Touch Panel Controller from overlapping the controller (Central Remote Controller, Network Convertor for LonWorks, and Network Convertor for Group Remote Controller) connected to the same VRF Network system**

FUNCTION SETTING

2-12. CENTRAL REMOTE CONTROLLER

■ ADDRESS SETTING

- Display the Installer Setting screen and Press the [ ] button and move the cursor to "Central Controller Address Setting".
- Press the [ ] button.

Central remote controller address setting

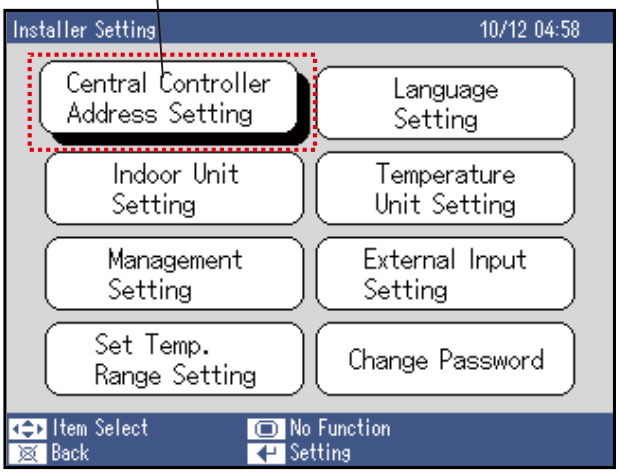

- Press the [UP] button or [Down] button.
- Set the Address value.
  The Address value can be set from 00 to 15.
- When the [ ] button is pressed, setting is complete.

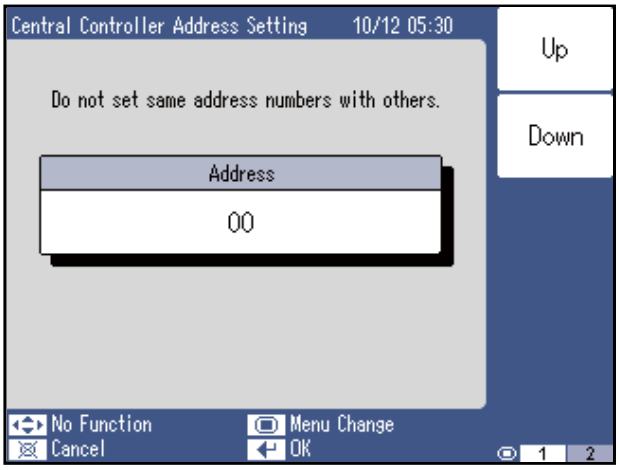

Note:

- **Address No. can be set between "00" and "15". (Up to maximum 16 Central Remote Controller can be installed to 1 system).**
- **When installing two or more Central Remote Controller, set up so that Address No. does not overlap.**
- **Please refer to the OPERATING MANUAL of Central Remote Controller for details.**
- **Please keep Address No. of Central Remote Controller from overlapping the controller (Touch Panel Controller, Network Convertor for LonWorks, and Network Convertor for Group Remote Controller) connected to the same VRF Network system**

FUNCTION SETTING

2-13. WIRED REMOTE CONTROLLER (Touch panel)

2-13-1. REMOTE CONTROLLER ADDRESS SETTING

■ CONFIRM THE REMOTE CONTROLLER ADDRESS

1) When the [RC Address Setting] on the "Maintenance" screen is touched, the "Installer Password Verification" screen is displayed.

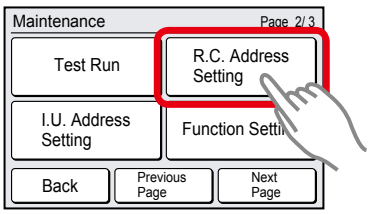

2) Enter the Installer Password, and touch the [OK]. "R.C.Address Setting" screen is displayed. The address of this unit is displayed on the "R.C.Address Setting" screen.

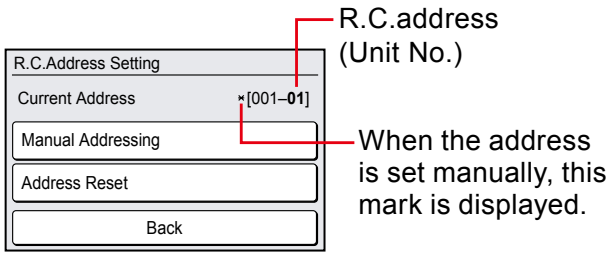

When the [Back] is touched, the display returns to the "Maintenance" screen.

Note:
The address of this unit is set automatically. Do not change the indoor unit remote controller address from the factory setting "0". (Verify that the address is "0".)

■ IF MANUALLY SETTING THE REMOTE CONTROLLER ADDRESS

1) Touch the [Manual Addressing] on the "R.C.Address Setting" screen.

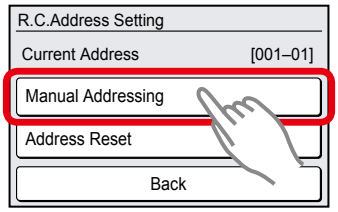

2) "Manual Addressing" screen is displayed. Set the address with [▲] or [▼].

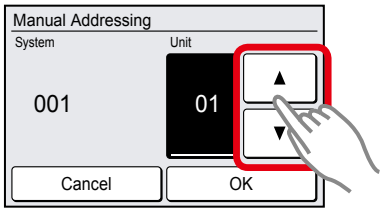

When the [OK] is touched, a verification screen is displayed.

3) When the [Yes] on the verification screen is touched, a message screen is displayed.

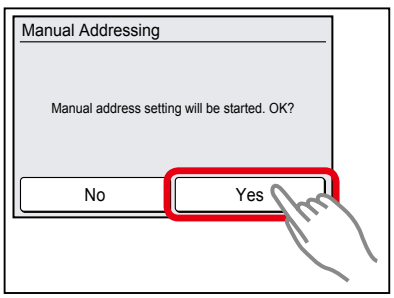

4) When the [Close] on the message screen is touched, the display returns to the "R.C.Address Setting" screen. Turn on the power again.

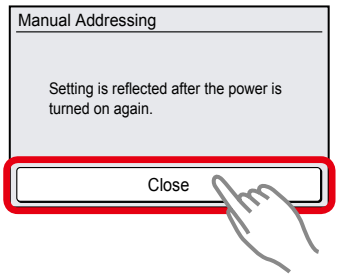

Note:
- Perform manual address setting only when setting the address with an arbitrary number. Indoor unit remote controller address setting is necessary. Set the remote controller address of indoor units connected by the same remote controller cable within a range of 1 to 9 and A (10) to F(15) so that there is no duplication. (Do not set to "0".)
- The address of this unit is set within a range of 1 to 32, but set it so that it does not duplicate the remote controller address of an indoor unit connected by the same remote controller cable.

FUNCTION SETTING

■ WHEN MANUAL ADDRESS SETTING NUMBER IS RESET

1) Touch the [Address Reset] on the "R.C.Address Setting" screen.

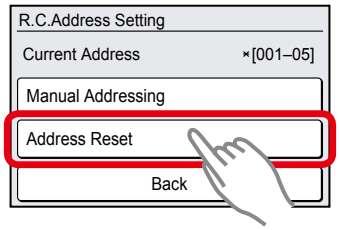

2) A verification screen is displayed. When the [Yes] is touched, a verification screen is displayed.

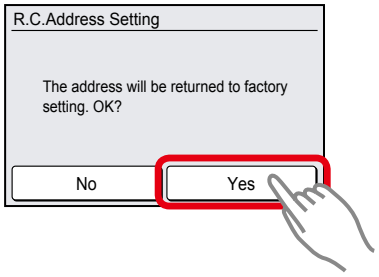

3) When the [Close] on the message screen is touched, the display returns to the "R.C.Address Setting" screen. Turn on the power again.

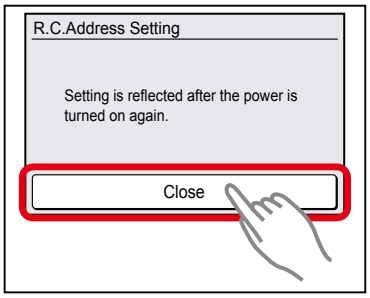

FUNCTION SETTING

2-13-2. REMOTE CONTROLLER MASTER/SLAVE SETTING

1) Touch the [RC Master/Slave Setting] on the “Initial Setting” screen. 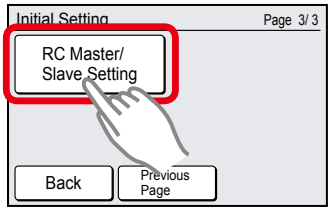 	2) “RC Master/Slave Setting” screen is displayed. Select the [Master] or [Slave]. 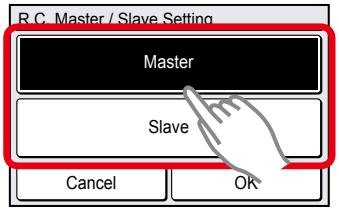 When the [OK] is touched, the display returns to the “Initial Setting” screen.

Note:
Please set only one Master remote controller. Units other than Master are set to Slave automatically. Do not perform “RC Mater/Slave Setting” during setting or operating from the Master unit.

FUNCTION SETTING

2-13-3. INDOOR UNIT ADDRESS VERIFICATION

1) Touch the [I.U. Address Verification] on the “Maintenance” screen. “Installer Password Verification” screen is displayed.

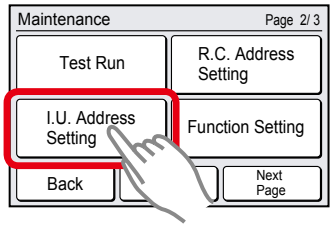

2) Enter the Installer Password and touch the [OK]. “I.U. Address Verification” screen is displayed. Enter the Installer Password and touch the [OK]. “I.U. Address Verification” screen is displayed. When the screen has multiple pages, they can be switched by touching the [Next Page] or [Previous Page].

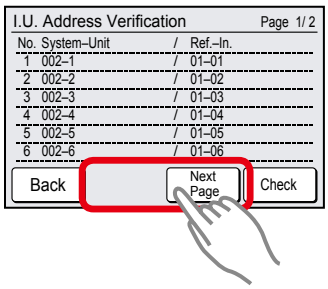

3) Touch the [Check] on the “I.U. Address Verification” screen.

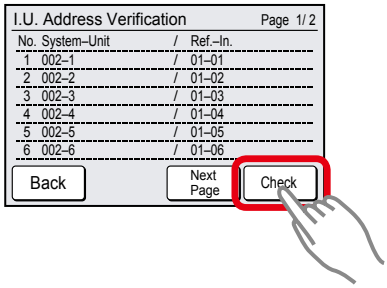

4) When the [YES] on the verification screen of indoor unit verification is touched, verification starts.

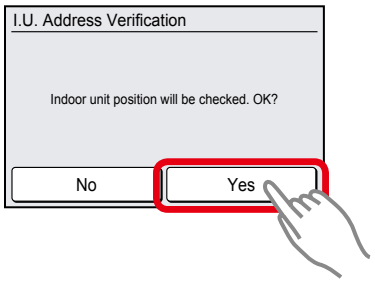

5) When indoor unit position verification ends, a screen displaying the indoor units in a list is displayed. When the screen has multiple pages, they can be switched by touching the [Next Page] or [Previous Page].

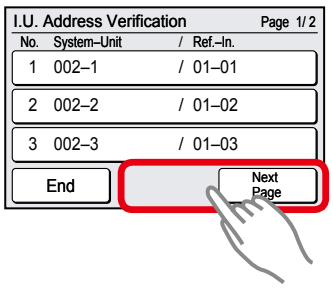

When the indoor unit address to be verified is touched, the appropriate indoor unit performs the air blow and LED lamps blink*. (*Only when the indoor unit has that function.)

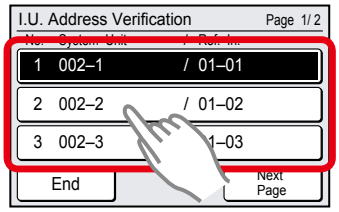

6) When the [End] is touched, the display returns to the screen of (2).

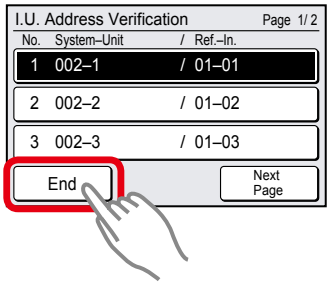

When the [Back] on the screen of (2) is touched, the display returns to the “Maintenance” screen.

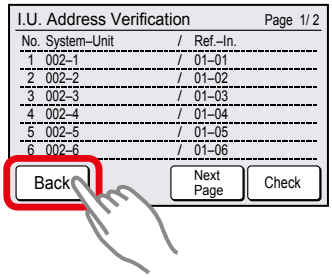

FUNCTION SETTING

FUNCTION SETTING

2-14. NETWORK CONVERTOR

■ SWITCH POSITION

- Set network convertor rotary switch 110 and 111.

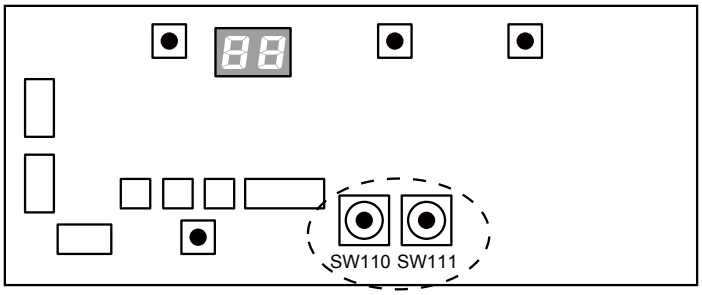

Network convertor PCB

■ CONVERTOR ADDRESS SETTING

For Group remote controller

● Example

Convertor address	SW setting	
	Rotary SW110 (10 digit)	Rotary SW111 (1 digit)
01	 0	 1
15	 1	 5

*Setting range 00 - 15 (Arbitrary numbers can be set)

*The sum total of the Touch panel controller, Central remote controller, Network convertor for Group remote controller and Network convertor for LonWorks® is a maximum of 16

*Address of the Touch panel controller, Central remote controller, Network convertor for Group remote controller and Network convertor for LonWorks® must not be same.

■ REFRIGERANT CIRCUIT ADDRESS SETTING

For Single split AC

● Example

Refrigerant circuit address	SW setting	
	Rotary SW110 (10 digit)	Rotary SW111 (1 digit)
01	 0	 1
99	 9	 9

*Setting range 00 - 99 (Arbitrary numbers can be set)

*When connecting the Network convertor for Single split AC , set up the number so that the Refrigerant circuit address number of outdoor unit and indoor unit does not overlap .

And the sum total of the Refrigerant circuit address of Network convertor for Single split AC and the Refrigerant circuit address of the outdoor unit and the indoor unit is a maximum of 100.

FUNCTION SETTING

2-15. SIGNAL AMPLIFIER

■ SWITCH POSITION

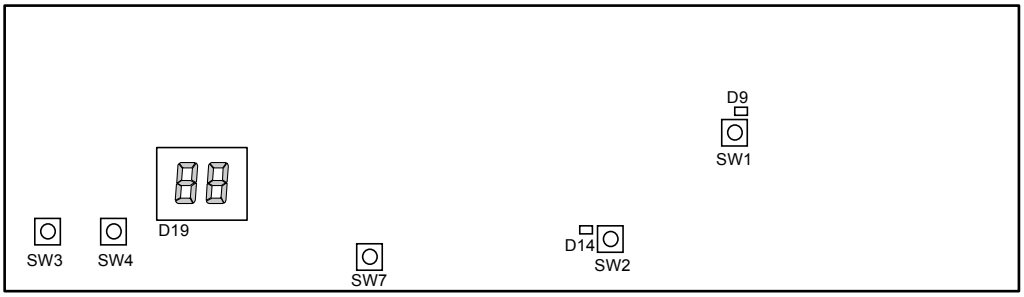

■ AUTOMATIC ADDRESS SETTING

- Refer to 1-7

■ MANUAL ADDRESS SETTING

1) Turn on the power for the signal amplifier.

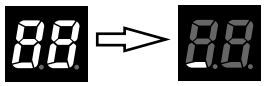

2) While holding down SW4 (the set button), press and release SW7 (the reset button) to enter the address setting mode. The address setting mode is activated only if the set button is held down when SW7 released.



3) Press SW4 (the set button) to display the current address.
The address is set to A1 at the factory.



Example 1)
When A1 is set

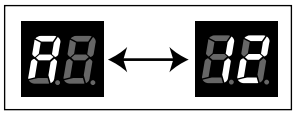

Example 2) When A12 is set

4) Press SW3 (the mode button) to select the address. The displayed address changes as follows each SW3 button is pressed. When the manual setting is selected, the indicators change as follows:

Filter mode: OFF

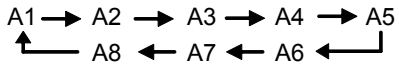

Filter mode: ON

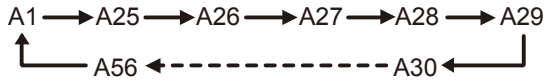



Ex.) Address No.5 is selected.

- Press the SW3 when A9-A16 or A57-A88 is displayed, then A1 will be displayed.
- If connecting multiple signal amplifiers, be sure to select a different address for each amplifier.
- If the same address is used for different signal amplifiers, normal communication cannot be done.

FUNCTION SETTING

5) Press SW4 (the set button) to set the selected address.


D19

Ex.) Address No.5 is set.

6) Turn the power off and on or press SW7 (the reset button) to exit the address setting mode and return to the normal mode.
If an address setting error occurs (“26 ” is displayed on the D19-indicator), the address will not be set. Perform address setting again.


D19

Normal mode


D19

Address setting error

FUNCTION SETTING

2-16. NETWORK CONVERTOR FOR LONWORKS®

■ SWITCH POSITION

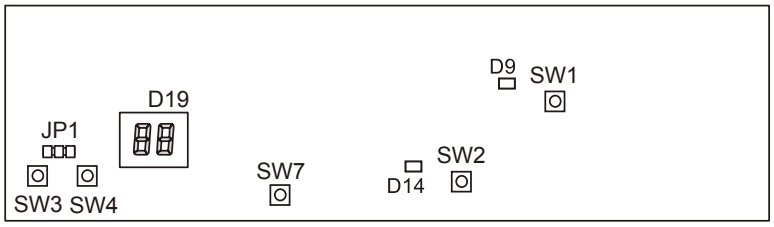

■ ADDRESS SETTING

When setting address, please be sure that the address of Network Convertor for LONWORKS® is not overlap the address of other controller like, Touch Panel Controller, Central Remote Controller & Network Convertor for Group Remote Controller.

Following steps are necessary for setting address of Network Convertor.

1) Turn on the power of network convertor.

2) Select the special mode by pressing and releasing SW7 (reset button) while holding down SW4 (set button) until special mode “1” is displayed.

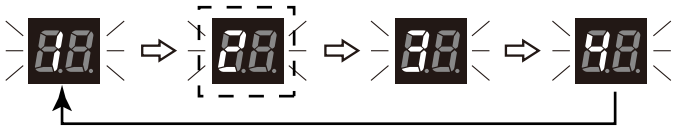

Special mode changes from ‘1’ to ‘4’ as shown in the above mentioned way.

3) Press SW3 (mode button) to set special mode “2”. Special mode “2” is the address setting mode.

4) Press SW4 (set button). Present address is displayed.



Ex.) Address No. 15 is factory setting.

5) Press SW3 (mode button) to select the address. The displayed address changes as follows each time the mode button is pressed.





Ex.) Address No. 3 is selected.

6) Press SW4 (set button) to set the selected address.



Ex.) Address No. 3 is set.

7) Turn the power off and on or press SW7 (reset button) to exit from address setting mode. Anyone of the following indication will disappear:

: VRF Network address allocation is not registered by using Tool for Network Convertor

: Binding and Commissioning is not executed

: Normal Mode (Ready for operation)

: Others (Please check Installation Manual for more detail)

FUNCTION SETTING

FUNCTION SETTING

2-17. DUCT STATIC PRESSURE SETTING

■ MODELS : ARXB07GALH, ARXB09GALH, ARXB12GALH, ARXB14GALH, ARXB18GALH

Change a setting of air flow, when external static pressure is less than 25 Pa.

A setting of air flow can be changed by exchanging wires for B type from A type. (Refer to following table)

How to set air flow

Connect "1" of "B type" wire to "CN110" on circuit board and "2" to the connector connected to the fan motor.

TYPE	EXTERNAL STATIC PRESSURE	WIRE		REMARK
A	25 - 50 Pa	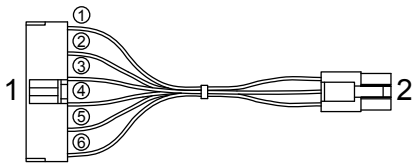	①PURPLE ②PINK ③BLUE ④RED ⑤WHITE ⑥BLACK	Factory setting (Standard static pressure)
B	0 - 25 Pa	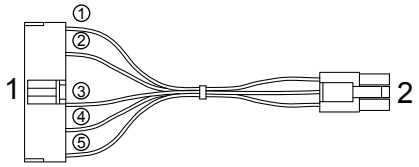	①BLUE ②PURPLE ③PINK ④WHITE ⑤BLACK	Accessories (Low static pressure)

● Layout of control box

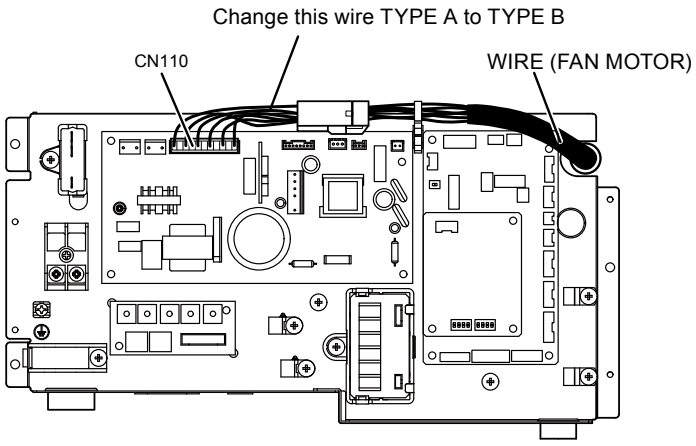

Be sure to connect the wire with connector.

If connection is improper, it will not operate properly.

FUNCTION SETTING

■ MODELS : ARXD04GALH, ARXD07GALH, ARXD09GALH, ARXD12GALH, ARXD14GALH, ARXD18GALH, ARXD24GALH

■ MODELS : ARXA24GBLH, ARXA30GBLH, ARXA36GBLH, ARXA45GBLH

Change the air flow setting dependings on the external static pressure is different from Normal static pressure.

Setting of air flow can be changed by exchanged by wireless remote controller, wired remote controller, and simple remote controller.

How to set air flow (external static pressure)

- Wireless remote controller

  Air flow is set by function number 26 (static pressure).

  Refer to "BUTTON NANE AND FUNCTION", "FUNCTION SETTING" and "FUNCTION DETAILS" in 2-3 INDOOR UNIT (setting by wireless remote controller).

- Wired remote controller

  Air flow is set by function number 26 (static pressure).

  Refer to "BUTTON NANE AND FUNCTION", "FUNCTION SETTING" and "FUNCTION DETAILS" in 2-4. INDOOR UNIT (setting by wired remote controller).

- Simple remote controller

  Air flow is set by function number 26 (static pressure).

  Refer to "BUTTON NANE AND FUNCTION", "FUNCTION SETTING" and "FUNCTION DETAILS" in 2-5 INDOOR UNIT (setting by simple remote controller).

- Wired remote controller (Touch panel)

  Air flow is set by function number 26 (static pressure).

  Refer to "FUNCTION SETTING" and "FUNCTION DETAILS" in 2-6. INDOOR UNIT (setting by wired remote controller [Touch panel]).

- FAN PERFORMANCE CURVE

  Refer to Chapter 4. 7.FAN PERFORMANCE CURVE.

Note
● If air flow setting is unmatched, it is caused to be air flow down or water leakage due to wrong operation.

FUNCTION SETTING

■ MODELS : ARXC72GATH, ARXC90GATH

When apply external static pressure less than 150Pa (ARXC72) or 200Pa (ARXC90) on the model, please follow the methods below to connect relay wire.

(1) Disconnect the PCB wire connector from Fan motor wire connector.
(2) Connect the Fan motor wire with Relay wire.
(3) Connect the PCB wire with Relay wire.

External Static Pressure	Relay wire	Remark
ARXC72 : 50-150Pa ARXC90 : 100-200Pa	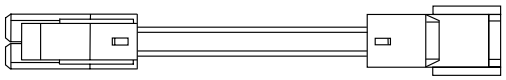 1 PINK 2 PURPLE 3 BLUE	Accessories (Standard static pressure)

● Layout of control box

High Static Pressure mode : 150-300Pa (ARXC72)
200-300Pa (ARXC90)
(Factory setting)

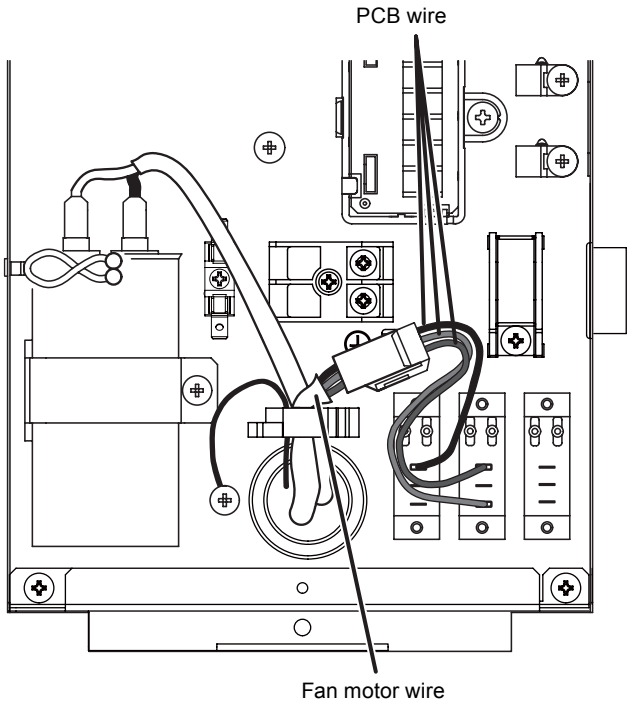

Standard Static Pressure mode : 50-150Pa (ARXC72)
100-200Pa (ARXC90)
(Change setting)

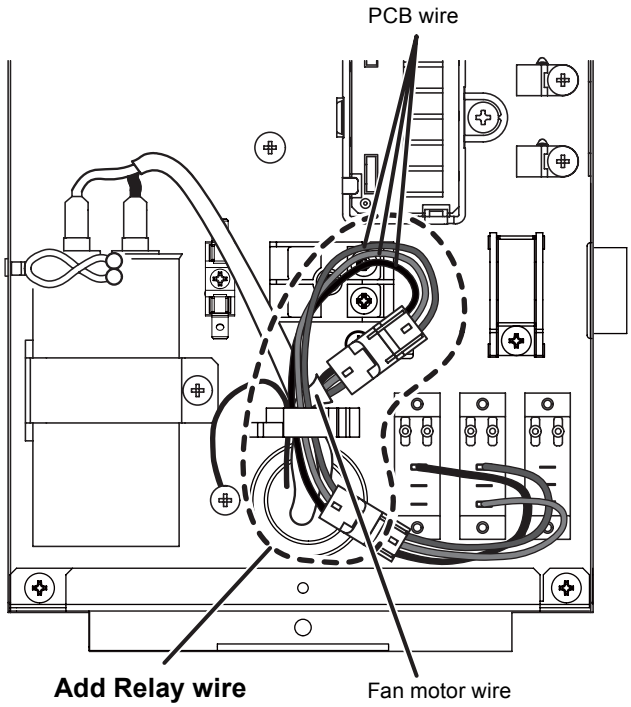

Be sure to connect the wire with connector.
If connection is improper, it will not operate properly.

FUNCTION SETTING

2-18. ADMINISTRATIVE INDOOR UNIT SETTING

- When multiple indoor units with separate wired remote controller are connected to one branch port of RB unit (group connection), it is possible to give the cool / heat mode selection authority to one particular wired remote controller (called master wired remote controller).
- When the master wired remote controller setting is not performed, mode(cool/ heat) selection priority goes to wired remote controller which executed first.

■ EXAMPLE

● Example 1 (OK)

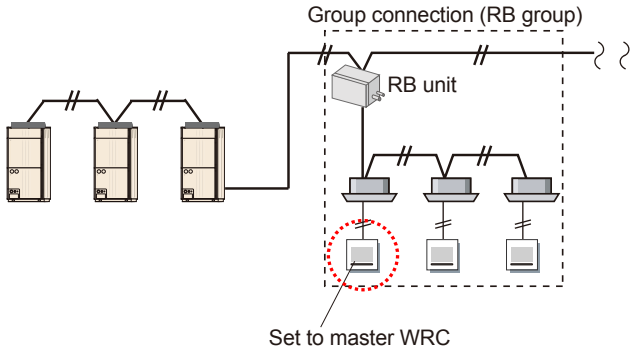

● Example 2 (Prohibited)

When indoor units which connected to different RB units are operated by one wired remote controller, administrative indoor unit setting can not be performed.

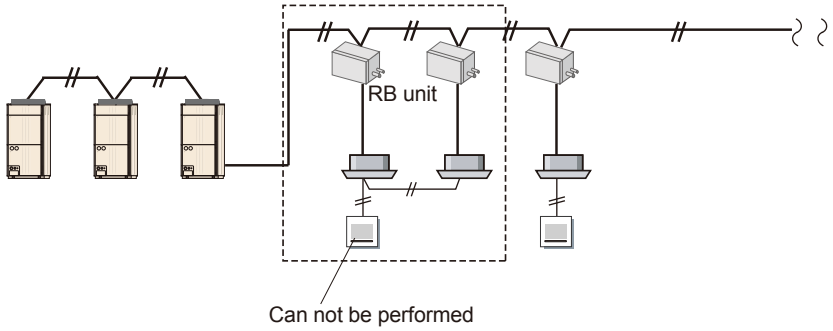

FUNCTION SETTING

2-18-1. SETTING METHOD

■ WIRED R.C.(Touch panel)

● Step1: RB unit function setting (Case of VR-II series)

Please set SET2 of DIP switch to "Priority given to administrative indoor unit" with function setting of RB unit. (SET2-1:OFF, SET2-2:ON)
→Refer to 2-7.RB UNIT

● Step1: Outdoor unit function setting (Case of V-II or J-II series)

Please set to "Priority given to administrative indoor unit" with function setting of outdoor unit.
→Refer to 6-1.OUTDOOR UNIT

● Step2: Wired remote controller setting

1) Touch the [Master Indoor Unit Setting] on the "Initial Setting" screen.

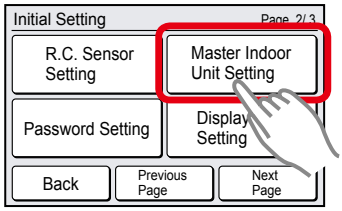

2) "Master Indoor Unit Setting" screen is displayed. When the [Set] is touched, a verification screen is displayed.

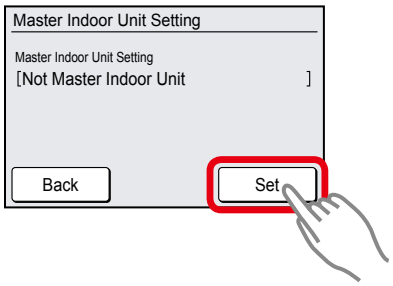

3) When the [Yes] is touched, after the data is transmitted to the indoor unit, the display returns to the "Master Indoor Unit Setting" screen.

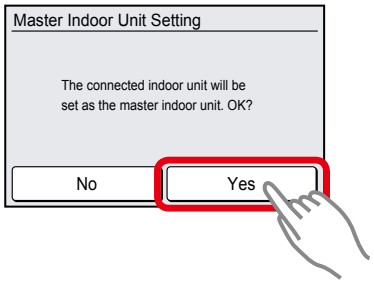

4) When the [Back] on the "Master Indoor Unit Setting" screen is touched, the display returns to the "Initial Setting" screen.

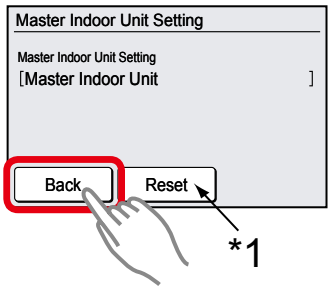

*1: To clear a master indoor unit, touch [Reset]. ("Reset" cannot be performed while the indoor unit is operating.)

Note:
●When changing the Master Indoor Unit, first cancel the setting of the indoor unit currently set as the Master Indoor Unit. Otherwise, an other indoor unit cannot be registered as the Master Indoor Unit newly..

FUNCTION SETTING

FUNCTION SETTING

■ WIRED R.C.

● Step1: RB unit function setting (Case of VR-II series)

Please set SET2 of DIP switch to "Priority given to administrative indoor unit" with function setting of RB unit. (SET2-1:OFF, SET2-2:ON)
→Refer to 2-7.RB UNIT

● Step1: Outdoor unit function setting (Case of V-II or J-II series)

Please set to "Priority given to administrative indoor unit" with function setting of outdoor unit.
→Refer to 6-1.OUTDOOR UNIT

● Step2: Wired remote controller setting

(1) After the indoor unit stops operation, press the “MODE” button of wired remote controller for 5 seconds continuously.
The operating mode of the wired remote controller display lights on after 5 seconds as follows.

(1)-a) The indication not set as "Administrative indoor unit"

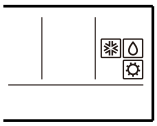

(1)-b) The indication set as "Administrative indoor unit"

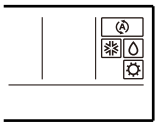

Note

● “MODE ” button is locked by below reasons while the marking lights on.
In such case, “Administrative Indoor Unit” cannot be set or released.

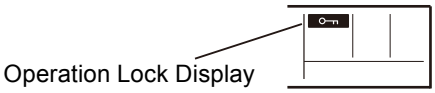

● “Priority on Administrative Indoor Unit” is not selected in the setting of priority mode of outdoor unit.
→Set “Administrative Indoor Unit” in the wired remote controller after selecting “Priority on Administrative Indoor Unit” in setting of priority mode of outdoor unit.

● Another indoor unit was set to “Administrative Indoor Unit” already.
→Release the setting “Administrative Indoor Unit” of another indoor unit.

(2) Press the “MODE ” button.
Display (1)-b) when setting, and display (1)-a) when releasing.
→The display blinks when the “MODE ” button is pressed, and the display of (1)-a) and (1)-b) alters whenever the “MODE ” button is pressed.
→The contents set in the wired remote controller are transferred to the indoor unit immediately after the display is selected. It may take 10 seconds depending on communication conditions. While this period, the button operation will be suspended.
→It returns to the normal display after 20 seconds automatically if the operation button is not pressed.
→When setting or releasing is completed, the indication on wired remote controller changes to the normal indication from blinking.

(3) Complete the setting or releasing of “Administrative Indoor Unit”.
Press the “MODE ” button of the wired remote controller again for 5 seconds continuously.
→The indication returns to normal display if the “MODE” button is pressed for 5 seconds continuously.
(It returns to normal indication after 20 seconds even if the “MODE ” button is not pressed.)

FUNCTION SETTING

■ NOTE

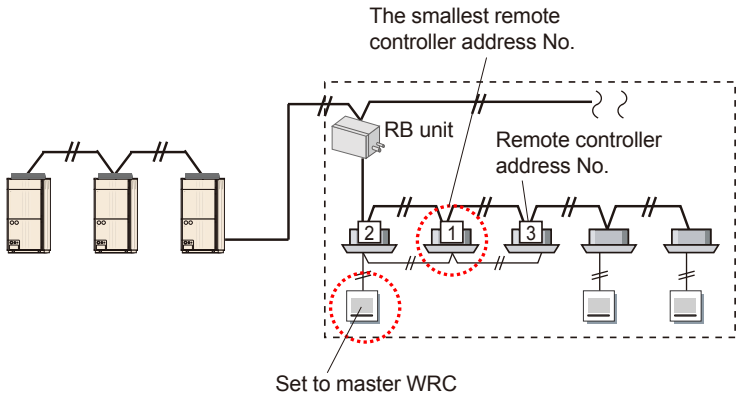

Note: In remote controller group, the cool/heat mode is changed over according to a detected room temperature of an indoor unit with the smallest remote controller address number.

FUNCTION SETTING

2-19. ENERGY SAVING SETTING (SYSTEM CONTROLLER)

In this section, an energy saving function and an electricity charge apportionment function which uses electricity meters is explained. System Controller (UTY-APGX, UTY-PEGX) is required to perform these functions.

■ FEATURES OF ENERGY SAVING FUNCTION

● Power consumption graph function

Displays by bar graph the power consumption measured by the electricity meter connected to the air conditioner. Use it to grasp the power consumption usage conditions.

The power consumption for 3 years is saved and the past history can be referenced.

In addition, the data of an arbitrary 2 periods can be displayed for comparison.

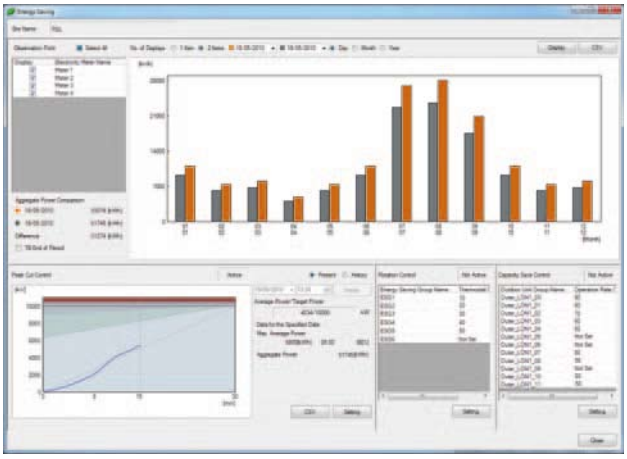

● Indoor unit rotation operation function

Reduces the power consumption by rotating the indoor units which are set to forced thermostat OFF.

Operating the air conditioner even in the spring and autumn when the heat load is comparatively light may have an energy saving effect.

Because it is an intermittent operation, it does not loose much comfort, and is a control which is difficult for the user of the room to sense its operation.

- The electric power consumed in the arbitrarily defined group is reduced by rotating indoor units which are set to forced thermostat OFF.

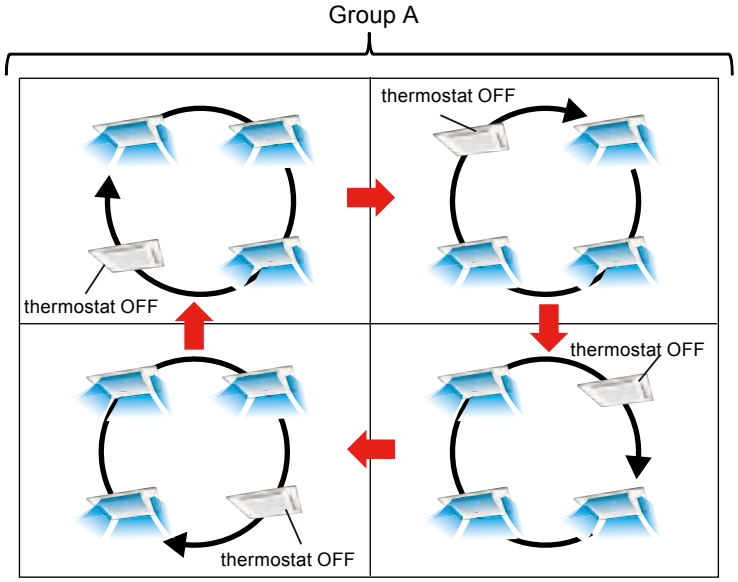

FUNCTION SETTING

- Indoor units can be rotated according to the stoppage rate set for each group.

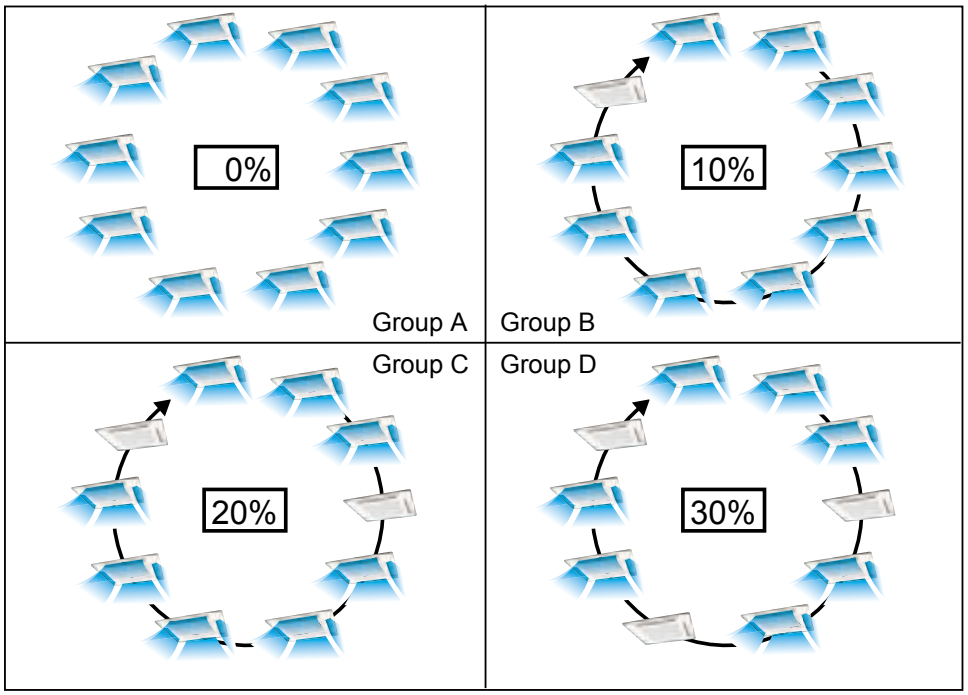

*The indoor unit operation stoppage rate can be selected from 10% to 30%.

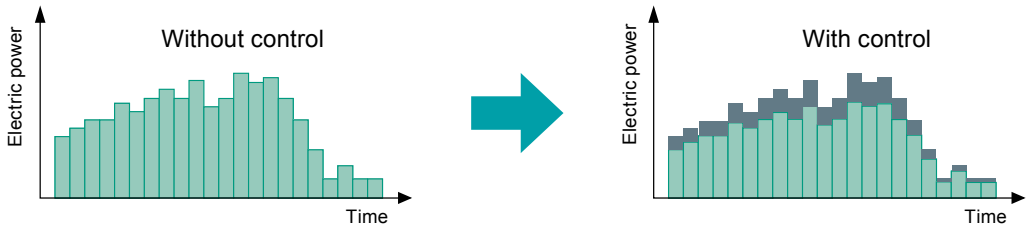

● Outdoor unit capacity save function

The power consumption is reduced by limiting the upper limit of the outdoor unit capacity for each refrigerant system.

This has a reducing effect especially in the summer, winter and other times when the heat load is high.

In addition, because the upper limit capacity of the outdoor unit is limited directly, it is a control which easily exhibits an energy saving effect compared to rotation control. However, because the outdoor unit does not operate above the limited capacity, there may be a loss of comfort, depending on the indoor heat load.

*The operation capacity upper limit rate [%] of the outdoor unit is specified for each refrigerant system.

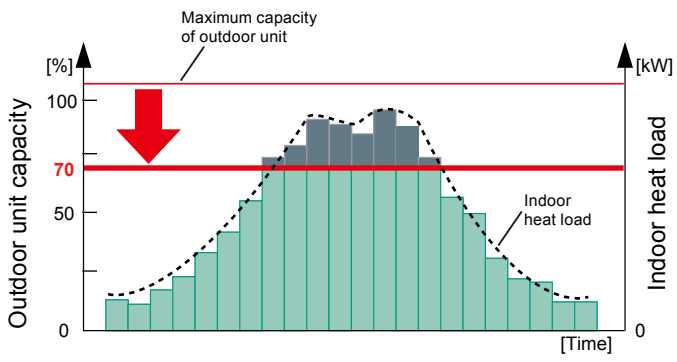

FUNCTION SETTING

● Peak cut operation function

Reduces the power consumption by setting a specific target value (maximum average power [kW]) for all the air conditioners and controlling operation so that this value is not exceeded.

Limit control is performed in 3 steps of “Step 1: Set temperature shift” → “Step 2: Thermostat OFF” → “Step 3: Outdoor unit stop”.

To perform this control, an electricity meter must be installed.

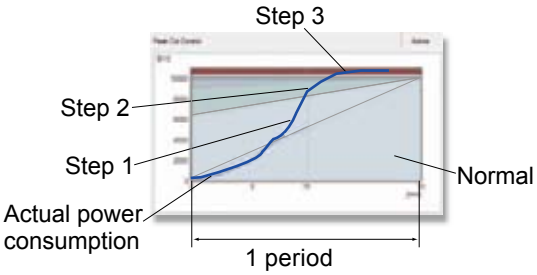

*Specifies the maximum average electric power [kW] for the entire air conditioning system.

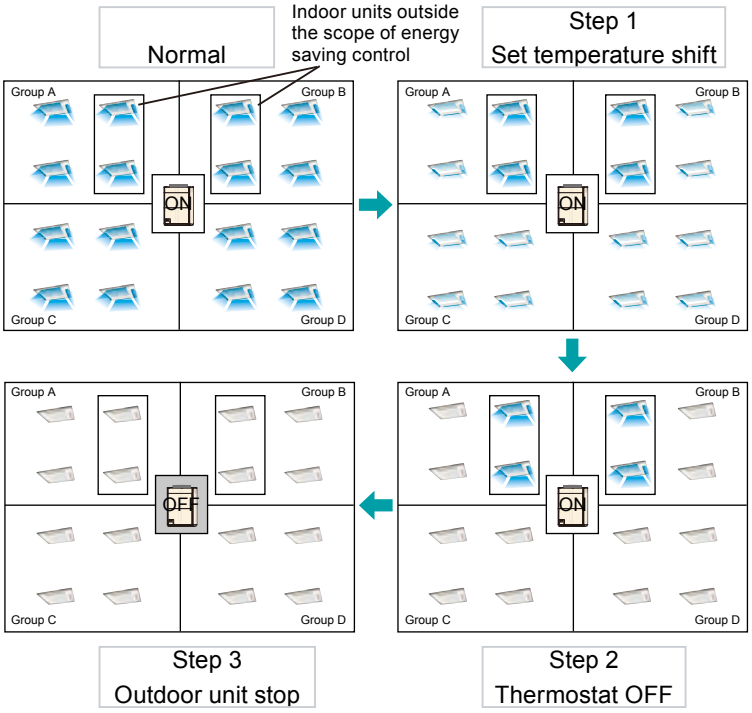

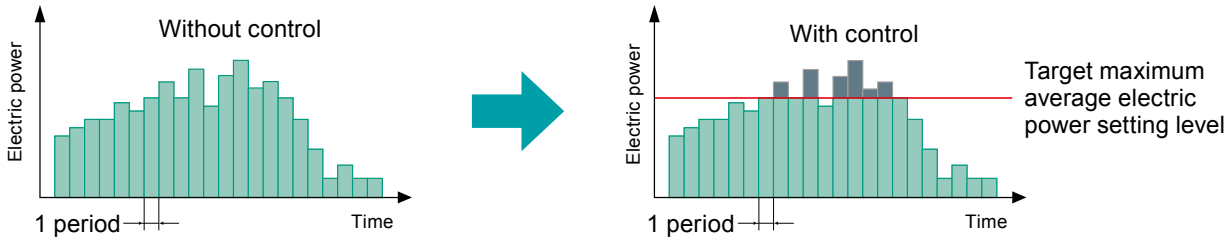

FUNCTION SETTING

■ GENERAL SETTING FLOW FOR ENERGY SAVING AND ELECTRICITY CHARGE APPORTIONMENT USING ELECTRICITY METER

The general setting flow for realizing an energy saving function and an electricity charge apportionment function using an electricity meter is shown as an example in the table below.

	Flow	Reference item
1	Overview of the energy saving function and electricity charge apportionment function using an electricity meter and an understanding of the usage method and restrictions, etc.	■Features of Energy Saving Function ■Operation Example ■Notes on Energy Saving Function ■Installation Restriction of Energy Saving Units ■Electricity Charge Apportionment and Electricity Meter
2	Deciding the power source supply system. Deciding the electricity meter installation sites, number and the outdoor units which are connected. Deciding the appropriate VT/CT specifications.	■Electrical Wiring ■Installation Restriction of Electricity Meter ■Electricity Meter System
3	Procuring the electricity meters and related hardware and materials.	■Electrical Wiring
4	Electricity meters and related hardware and materials installation work.	■Electrical Wiring
5	Electricity meter setting.	■Setting of Outdoor Unit and System Controller
6	Outdoor unit setting.	■Setting of Outdoor Unit and System Controller Refer also to "6-6-1.OUTDOOR UNIT"
7	System controller setting.	■Setting of Outdoor Unit and System Controller Refer also to "System Controller Instruction Manual"

Note: Outdoor units and indoor units layout, remote controller group combination method, and other design shall be performed separately.

FUNCTION SETTING

■ OPERATION EXAMPLE

Electric charges usually consist of the following elements.

With the energy saving function, operation for each element is as follows.

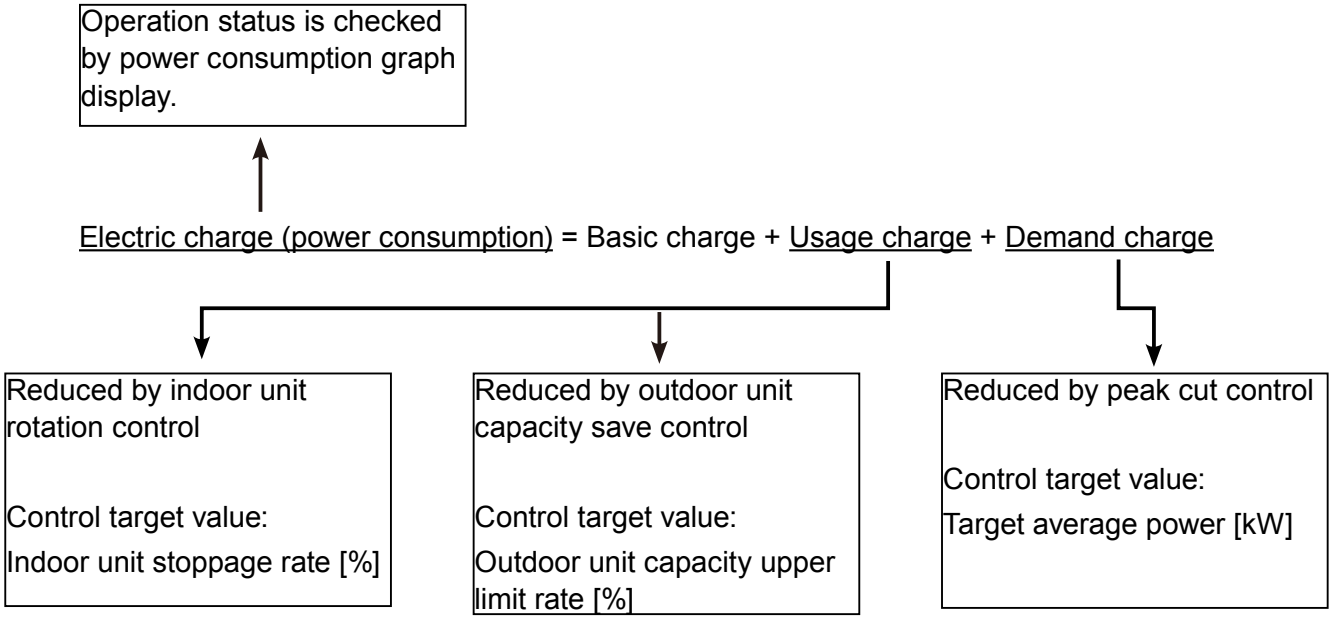

*Basic charge: Charge billed according to contract with the electric power company. Includes meter reading cost and billing cost.

*Usage charge: Charge billed according the power consumed.

*Demand charge: Charge billed according to the scale of the contract with the electric power company

FUNCTION SETTING

■ NOTES ON ENERGY SAVING FUNCTION

Energy saving function precautions and scope of guarantee

The effect of the energy saving function depends on the units used, usage environment, installation environment, and so forth. Each energy saving function is not guaranteed to display a fixed effect and function for operation by specific setting. Reading and understanding the following precautions is requested before using the function.

(1) How to use the energy saving function

Since the effect of the energy saving function depends on the units used, usage environment, installation environment, and so forth, a different effect may appear according to the building and operating period even when operated with the same settings and schedule. Try to gain an understanding of the features of each energy saving function and confirm the actual effect through operation and apply appropriate settings, etc. as required.

(2) Target electric power of peak cut function

These are values used as target values when performing peak cut control. These values do not always guarantee that the consumed power is within the target value. For example, even if forced thermostat off and outdoor unit stoppage are activated, the control become ineffective if the outdoor unit is performing a protective operation (oil recovery and defrosting). As a result, the electric power consumed may exceed the target electric power.

(3) Relationship between unit protection and energy saving function

For VRF, there are operations and restrictions for protecting units. The energy saving function operates within the range of these protective operations and restrictions. When the energy saving function performs control against these protective operations and restrictions, the protective operations and restrictions have priority and the energy saving function is either restricted or may not operate. As protective operations of units, there are oil recovery, defrosting, etc. which are automatically performed periodically or under specified conditions.

(4) Failure, etc.

An energy saving function operates only when the related units are operating normally. When the power of the electricity meter and the outdoor units connected to an electricity meter and the SYSTEM CONTROLLER is turned off due to a failure, etc. the energy saving function will not operate normally.

(5) Explaining to the building tenants

During energy saving function operation, control from the remote controller may be overrided by the energy saving control. For this reason, it is recommended that the building tenants be informed of this beforehand.

FUNCTION SETTING

■ INSTALLATION RESTRICTION OF ENERGY SAVING UNITS

(1) Only 1 unit may perform energy saving control at a time. When energy saving control is performed by SYSTEM CONTROLLER (UTY-APGX/PEGX), stop energy saving control *1 from the building management system through the following units.

・BACnet GATEWAY (UTY-ABGX)

・NETWORK CONVERTOR for LonWorks (UTY-VLGX)

When energy saving control is performed from multiple points, trouble may occur.

*1: Forced thermostat OFF, outdoor unit stoppage

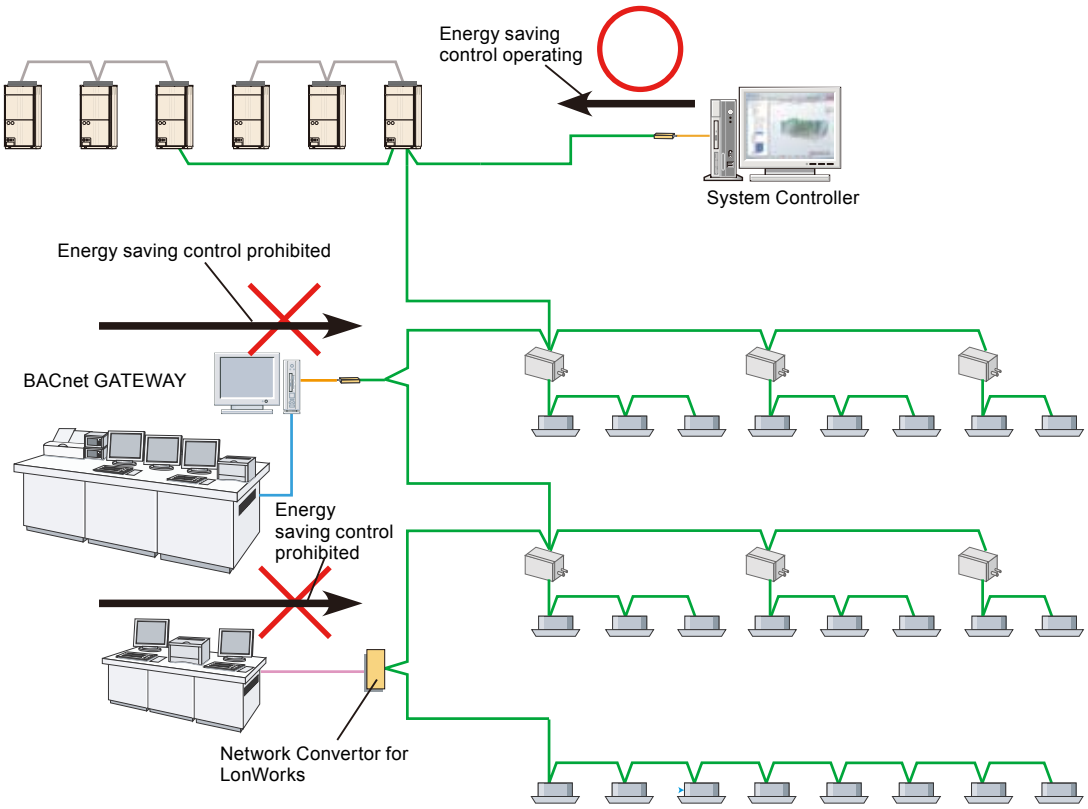

(2) Electricity meter installation

Among energy saving control, there are functions which require installation of an electricity meter.

・Power consumption graph display function

・Peak cut control

When performing these functions, refer to the installation rules and install an electricity meter in advance.

FUNCTION SETTING

■ ELECTRICITY CHARGE APPORTIONMENT AND ELECTRICITY METER

When implementing the electricity charge apportionment function in a VRF System, a configuration which does not use electricity meters or a configuration which uses electricity meters can be selected. The differences between these two configurations are explained below.

The electricity charge apportionment function apportions the power consumption to each block (tenant indoor unit) defined in advance according to the usage record, after the power consumption (electricity charge) of the air conditioners is input to the System Controller. Electricity charge apportionment calculation becomes possible only after inputting the power consumption (or electricity charge).

[Electricity charge apportionment when electricity meter not used]

Only after the electricity bill is received from the electric power company and the billed amount is input into the System Controller, can electricity charge apportionment for the billed period be calculated.

[Electricity charge apportionment when electricity meter used]

Since the power consumption data is sent from the electricity meter to the System Controller at any time, basically electricity charge apportionment calculation can be performed at any time. Because an actual System Controller calculate power charge apportionment data in one day units, electricity charge apportionment calculation can be performed at an arbitrary day in one day units.

Example (1)

When the tenants of a tenant building, etc. are billed for their air conditioning electricity charge once a month, if the electricity bill arrives from the electric power company each month, the electricity charge apportionment function can be used without electricity meters because electricity charge apportionment can be performed based on that bill and the tenants can be billed. Even if there are tenants moving in and out within a month, appropriate billing can be performed after the bill was received from the electric power company. However, when the electricity bill is received from the electric power company once every 3 months, electricity charge apportionment for 3 months cannot be calculated until the bill is received. In this case, building owner can only bill the building tenants for air conditioning electricity charges every 3 months. However, if electricity meters are installed, billing at an arbitrary interval, for example, once a month, is possible.

Example (2)

When air conditioning electricity charge is billed based on the electricity charge apportionment function for each room in hotels etc., because guests leave and arrive daily and the electricity charge is calculated each time, you cannot wait for the electricity bill to arrive from the electric power company. In such cases, it must be possible to be able to calculate electricity charge apportionment at any time using electricity meter.

FUNCTION SETTING

■ ELECTRICAL WIRING

● Electricity meter connection composition

To perform energy saving peak cut control, basically, electricity meters with pulse transmission function measuring all the power consumed by the air conditioner are necessary. Multiple meters installations are also possible as long as the number of electricity meters is within the specified limit. A general electricity meter installation configuration is shown below.

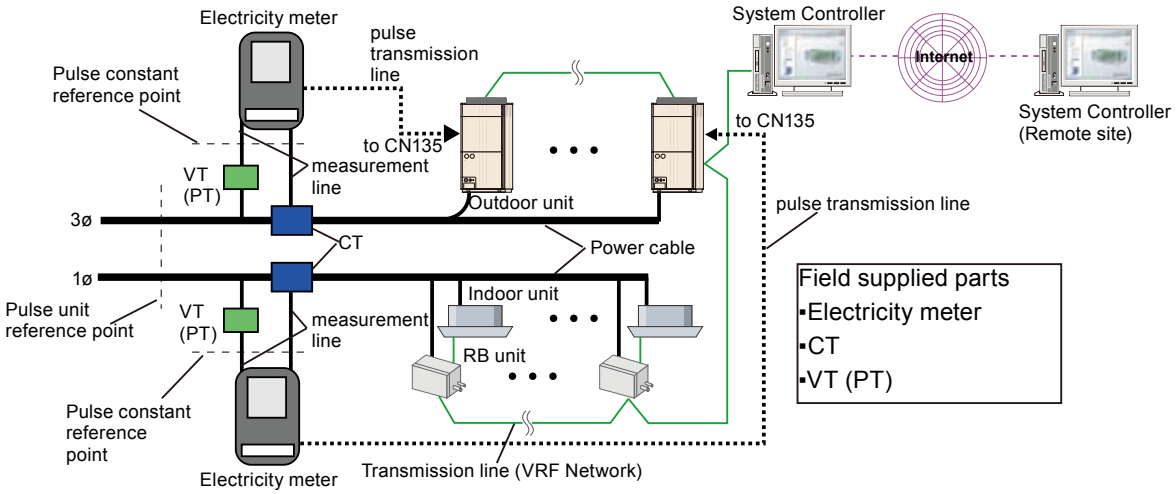

Item	Description	Remarks
Electricity meter	Measures the voltage and current of the power cable to which measurement line is connected and finds the power consumption from these. In addition, pulses corresponding to the measured value are output to the transmission line.	
VT(PT)	Voltage Transformer (Power Transformer) Transform the power source voltage to a measurable voltage. Transformation ratio is indicated by VT (PT) ratio. Normally unnecessary for the voltage value level used by outdoor units and indoor units.	
CT	Current Transformer Transform the power line current value to a current measurable by an electricity meter. Transformation ratio is indicated by CT ratio. There are types which is inserted between power cables and types which are coupled to the power cables.	
Pulse unit	Pulse unit indicates the relationship between electricity meter output pulse and measured power. The value specified in pulse unit indicates the power in kWh consumed on the power cable for 1 pulse. Units: [kWh/pulse] The value specified by pulse unit takes into account the VT and CT ratio used and corresponds to the actual power consumption itself.	
Pulse unit reference point	Indicates the measurement point of the power consumption specified in pulse units.	
Pulse constant	Pulse constant indicates the relationship between electricity meter measured power and output pulses. The value specified by pulse constant indicates how many pulses are equivalent to 1kWh of power consumption input to an electricity meter. Units: [pulse/kWh] Because the ratio of VT and CT used is not taken into account in the value specified by pulse constant, to find the actual power consumption on the power cable, the pulse constant value must be multiplied by both the VT and CT ratio.	
Pulse constant reference point	Indicates the measurement point of power consumption specified by pulse constant.	

FUNCTION SETTING

● Selection of Electricity meter, CT, and VT

Select the electricity meter, CT, and VT by considering the following items.

(1) Install electricity meters for each refrigerant system, if circumstances allow.

(2) Select VT/CT with a small VT/CT ratio.

(3) When using an electricity meter which is specified in pulse units (kWh/pulse), usually select a meter with a 1kWh/pulse output.

● Outdoor unit connection interface (CN135) to electricity meter

Item		Specifications	Remarks
Interface		Dry contact “a” contacts	“a” contacts: ON when shorted *1
Pulse	Specifi-cations	Width: 50ms or more Interval: 50ms or more	
	Units	1kWh/pulse (pulse units) recommended	
	Constant	Considering the electricity meters available in some countries, use of electricity meters with 3200 pulse/kWh (pulse constant) or less pulses are possible.	
Line length restriction		150m or less	Between Electricity meter to Outdoor unit
Wiring specifications		Control and instrumentation cable CVV-S (Control-use Vinyl insulated Vinyl sheathed cable – Shielding) *2 2-conductor 1.25mm^2	

*1: Pulse signal: normally OFF (open), ON (closed) when shorted

*2: When affected by interference by induction, select shielded CVV cable (CVV-S cable). This is because copper shielding tape is wrapped around CVV cable and induction interference from adjacent power cables is alleviated and normal communication is maintained.
In addition, when the wiring is outdoors, select weather resistance cable.

● Number of electricity meters installed and connection destination

Item	Specifications	Remarks
Number of electricity meters installed	Max.200	Per System Controller
	Max. 1	Number connectable to 1 outdoor unit (master or slave)
Electricity meter signal line connection destination	Arbitrary	There are no restrictions on outdoor units which connect an electricity meter. An arbitrary electricity meter can be connected to an arbitrary outdoor unit.

FUNCTION SETTING

● Installation example of Electricity meter

• Example of installation for each refrigerant system

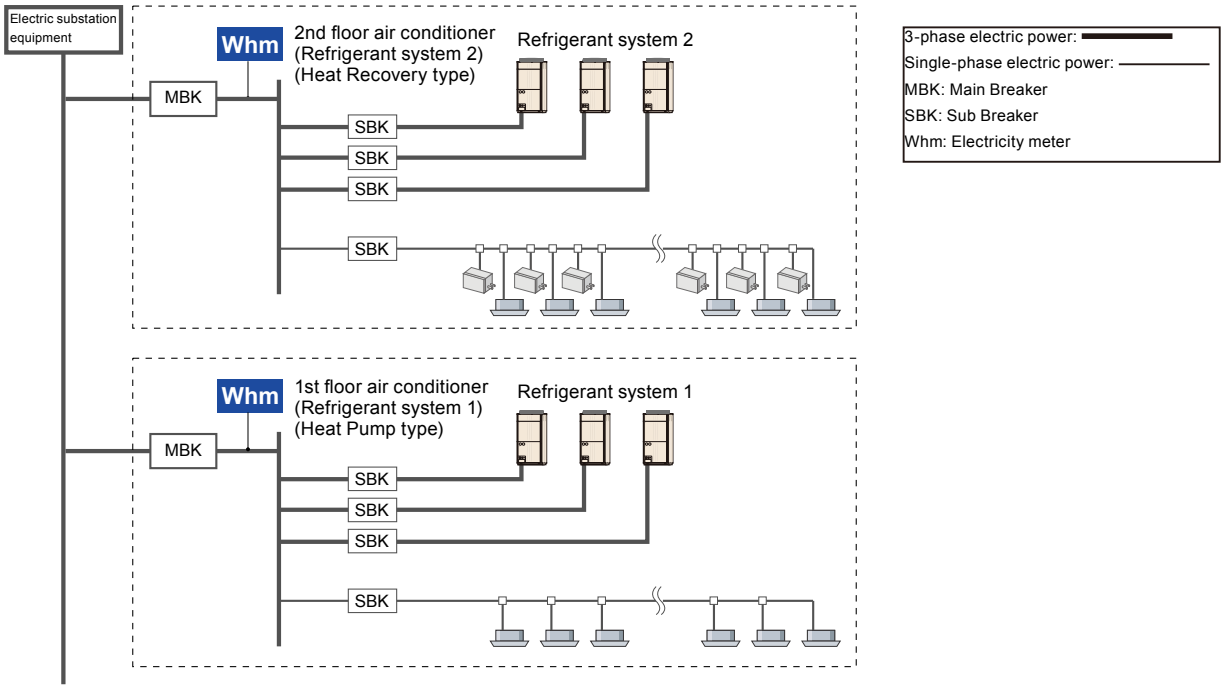

• Example of installation for indoor units and outdoor units

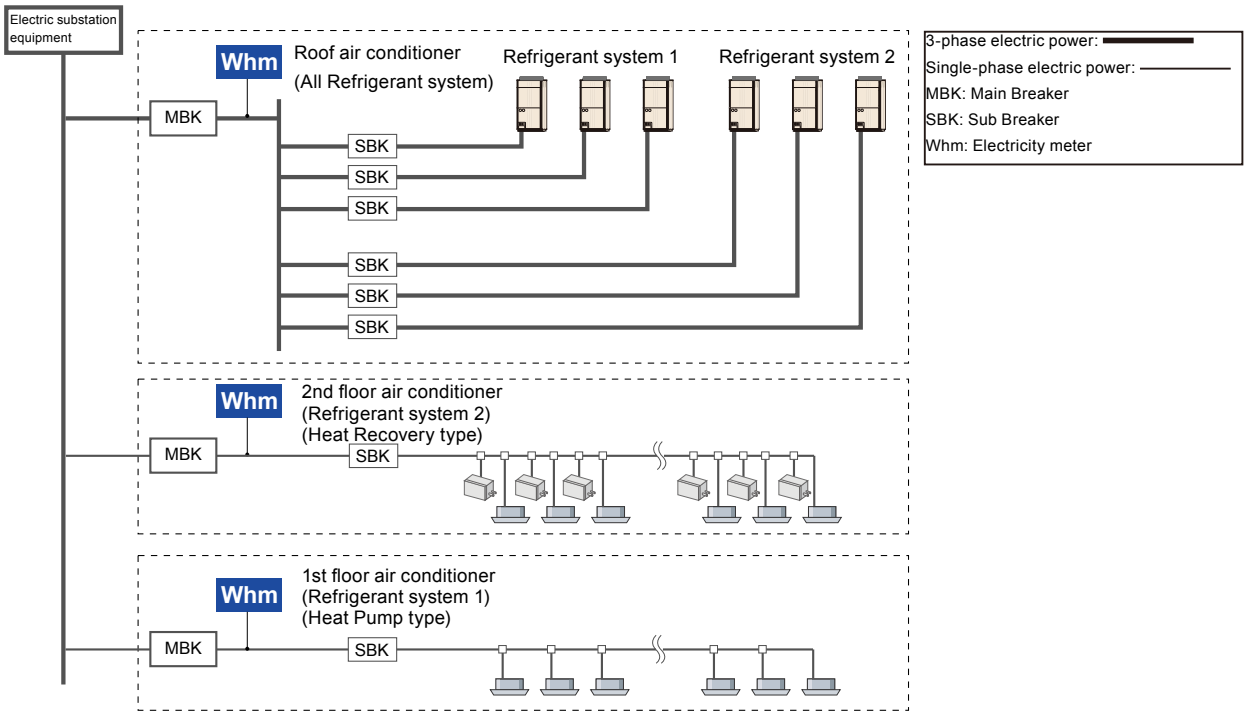

FUNCTION SETTING

• Example of installation for each tenant

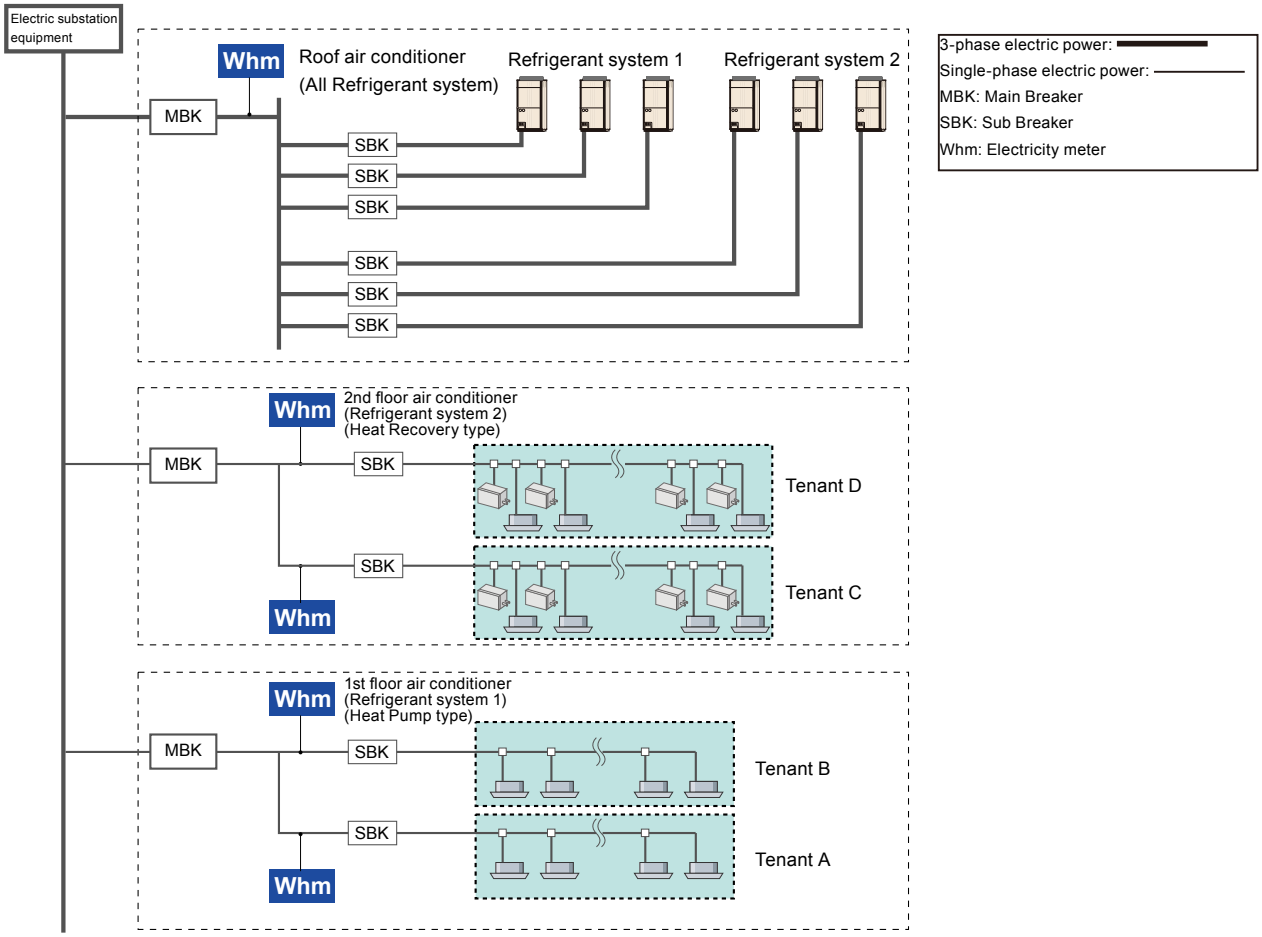

FUNCTION SETTING

■ INSTALLATION RESTRICTION OF ELECTRICITY METER

● Functions that requires installation of electricity meter

Use an electricity meter having the following functions:

・Electricity charge apportionment function

Install for operation using an electricity meter. (Operation without an electricity meter is also possible.)

When using an electricity meter, an electricity meter must be installed for all the units which perform apportionment calculation.

・Peak cut control function

Installation of an electricity meter is essential.

・Power consumption graph display function

Installation of an electricity meter is essential.

[Installation example]

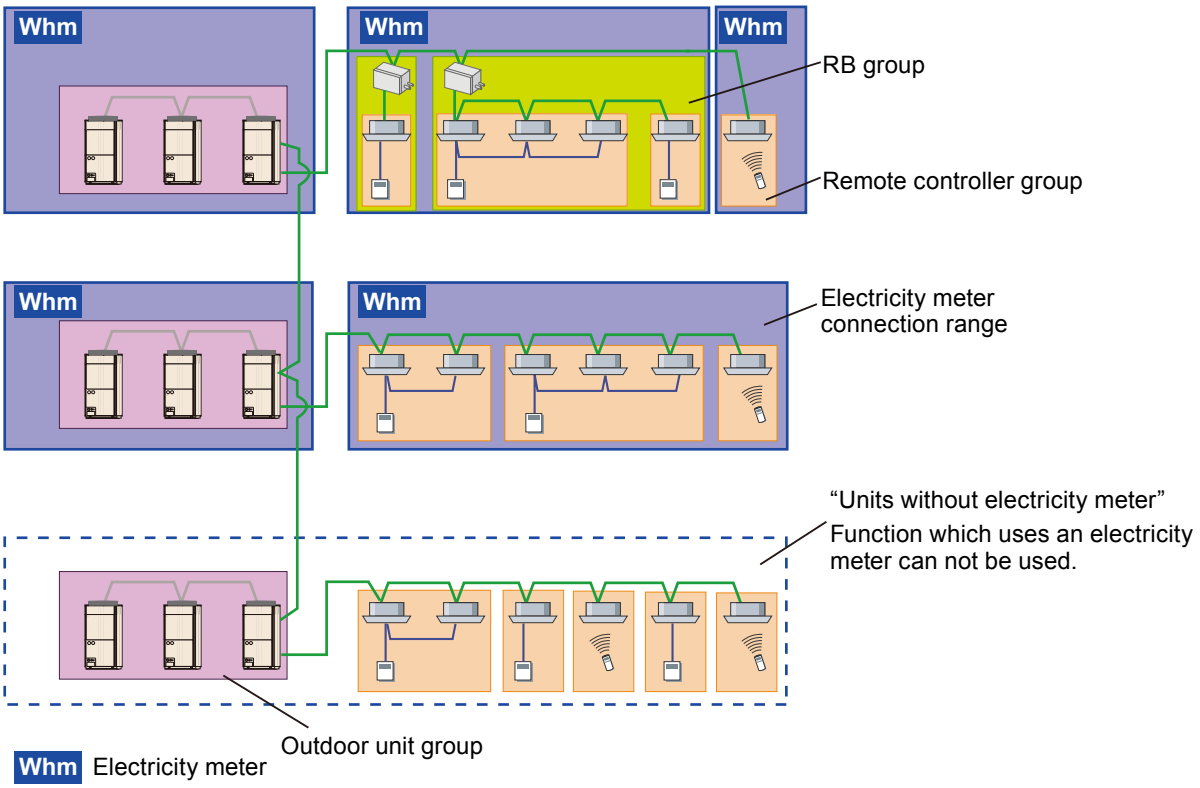

FUNCTION SETTING

● Installation restriction

Install electricity meters in accordance with the following restrictions:

(1) Install an electricity meter only to air conditioners which are the target of the function.
When electric lights and other OA equipments are connected to the electricity meter, also their power consumptions are calculated.
Connect electricity meters to only the necessary air conditioners.

(2) An electricity meter can be connected to VR-II Series air conditioners
An electricity meter can only be installed to the VR-II Series, V-II Series*1, J-II Series.
An electricity meter cannot be connected to S Series and V Series units because they are not electricity meter supported.

*1: Indoor units and outdoor units with revision code B or later is required.

(3) Electricity meter supported/unsupported units cannot be mixed under one electricity meter. (Because the available functions are different)
When connecting single type air conditioners via VR-II Series network converter (UTY-VGGXZ1), separately connect the electricity meter to VR-II Series VRF air conditioners because there are some functions *2 that are electricity meter unsupported.
However, UTY-VGGXZ1 which connects a group remote controller is an exception.

*2: [Electricity charge apportionment function]
The electricity charge apportionment function cannot be used with single types air conditioners which are connected to a network converter.
[Energy saving function]
In the peak cut control, though the power will be included in the target power, the actual control will not be performed.

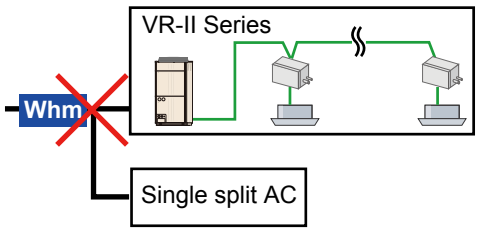

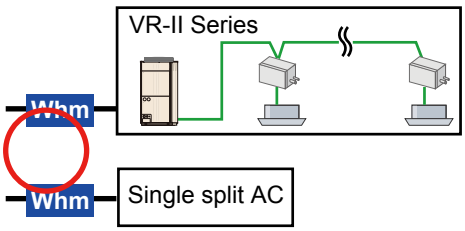

(4) Electricity power meters cannot be nested
Installation of the meters themselves is possible, but use only one electricity meter for the System Controller . (If both are used, the power consumption will be measured twice.)

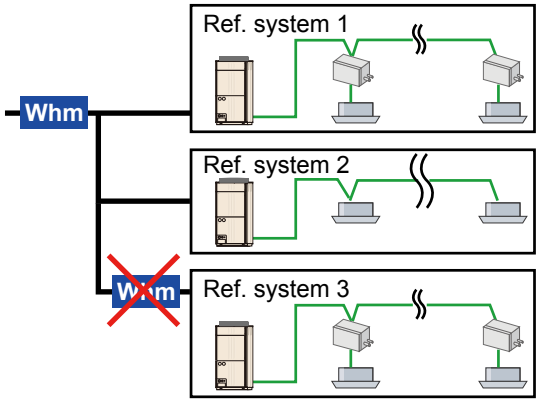

FUNCTION SETTING

(5) The externally linked units* shall be connected to the same electricity meter as the air conditioner to which they are connected.

*General-purpose unit which performs calculation as an externally linked unit by electricity charge apportionment function.

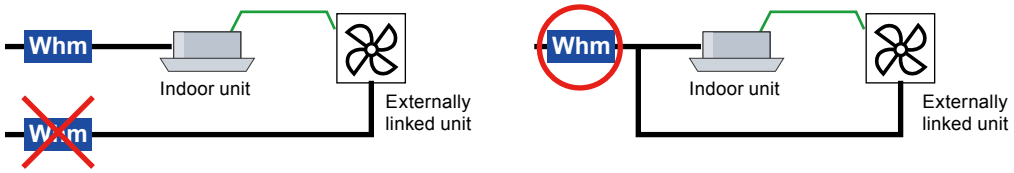

(6) Installation of electricity meter which divides remote control groups is prohibited.

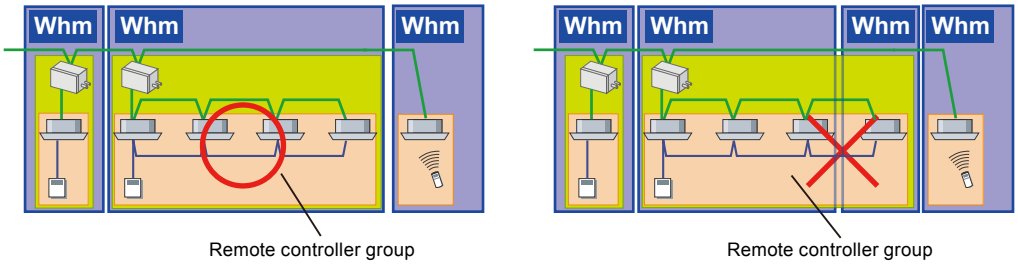

(7) Installation of electricity meter which divides outdoor unit groups is prohibited.

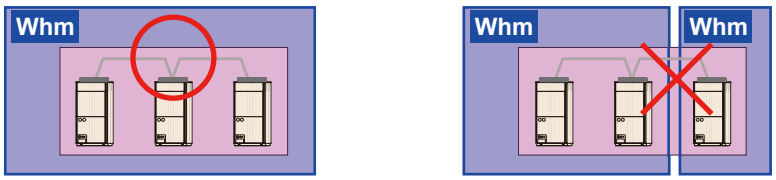

(8) Installation of electricity meter which divides RB groups is OK.

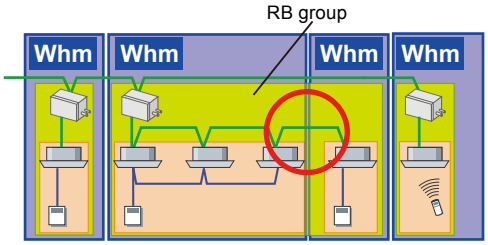

FUNCTION SETTING

(9) Installation of electricity meter which crosses the contract is prohibited.
When an electricity meter is used by electricity charge apportionment function, install the electricity meter so that it does not cross over the “contract setting” set by electricity charge apportionment.

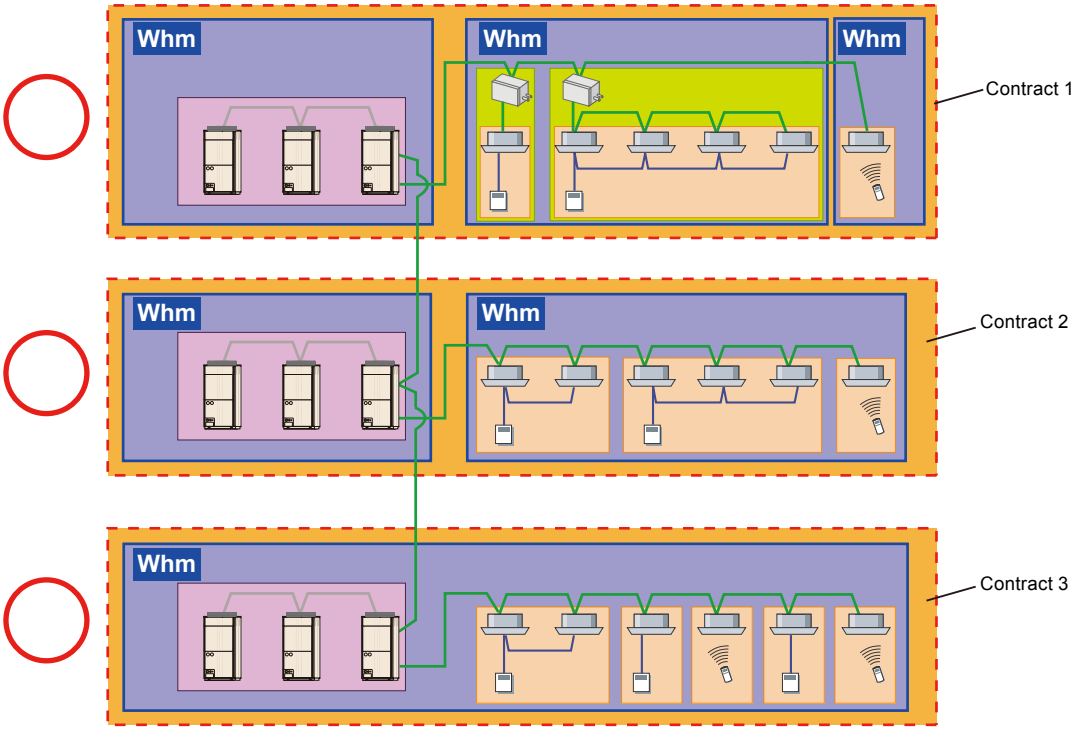

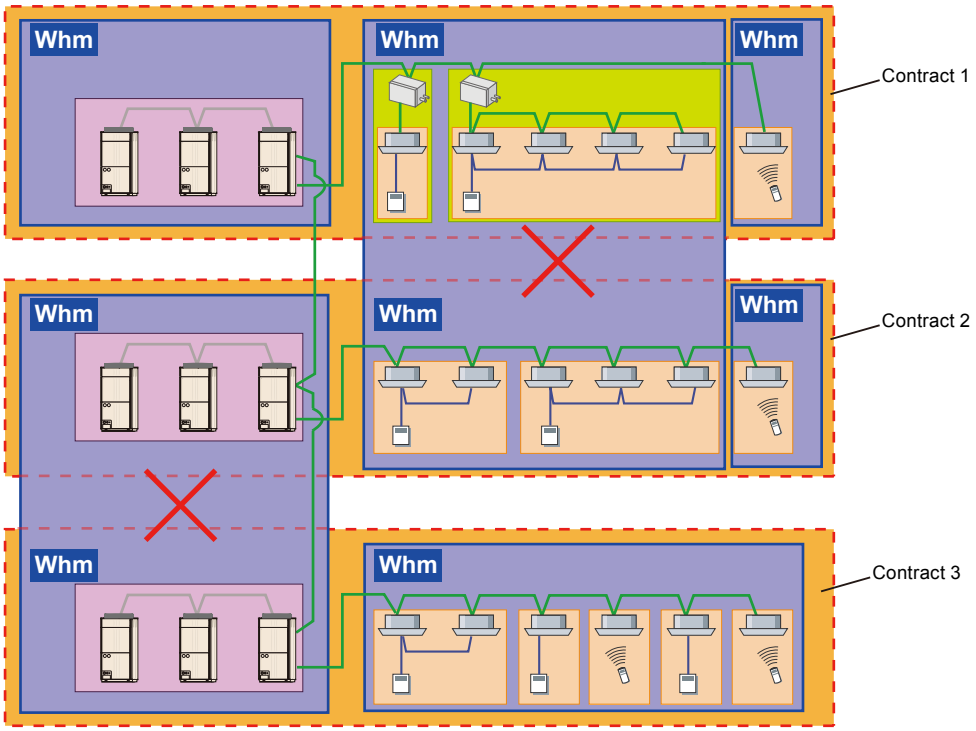

FUNCTION SETTING

(10) When performing apportionment calculation using electricity meter

The electricity meter shall be connected to the necessary air conditioners which are the target of calculation by the electricity charge apportionment function.

When an electricity meter is not connected, electricity charge apportionment calculation using an electricity meter may not be possible.

<<Electricity charge apportionment with outdoor unit only>> → Connect the electricity meter to the outdoor unit.

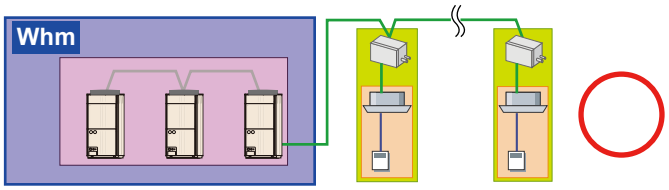

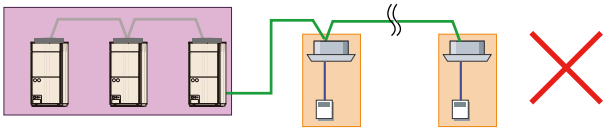

Electricity meter is not connected to outdoor unit

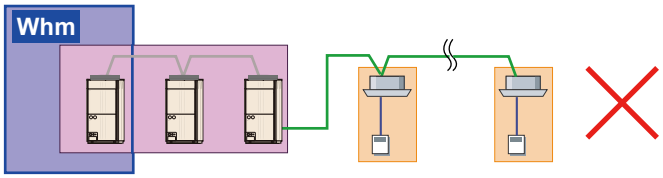

Electricity meter is not connected to only some outdoor units

<<Outdoor unit + indoor unit electricity charge apportionment>> → Connection of an electricity meter to the outdoor unit and indoor unit is necessary.

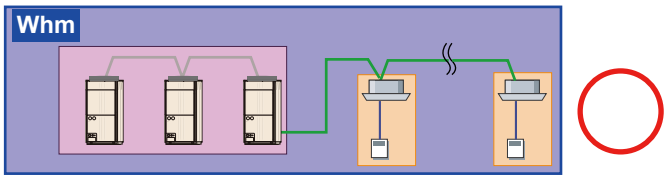

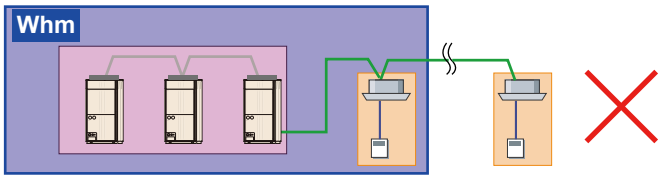

Electricity meter is not connected to some indoor units

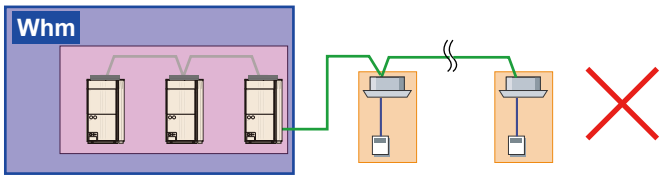

Electricity meter is connected to outdoor unit only even though outdoor unit + indoor unit electricity charge apportionment is performed.

FUNCTION SETTING

<<Outdoor unit + indoor unit + RB unit electricity charge apportionment>> → Connection of an electricity meter to the outdoor unit, indoor unit and RB unit is necessary.

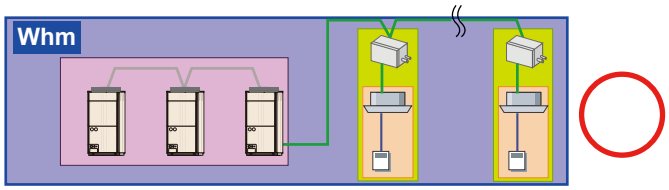

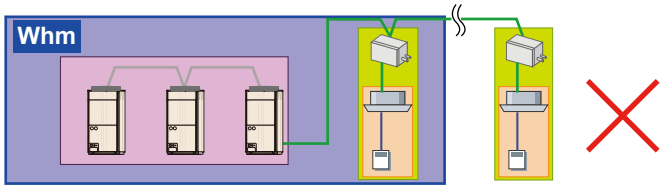

Electricity meter is not connected to some indoor units and RB units

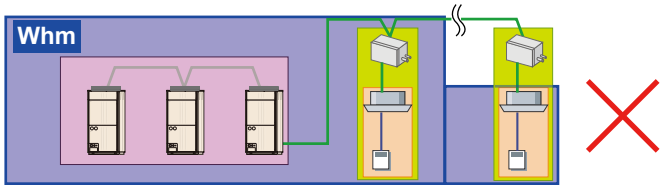

Electricity meter is not connected to some RB units

FUNCTION SETTING

Note

The belows are electricity meter connection methods which can be adapted by the System Controller. However, the previously mentioned setting restrictions must be observed.

(1) Multiple VRF Networks can connect to 1 electricity meter. (with network crossover)

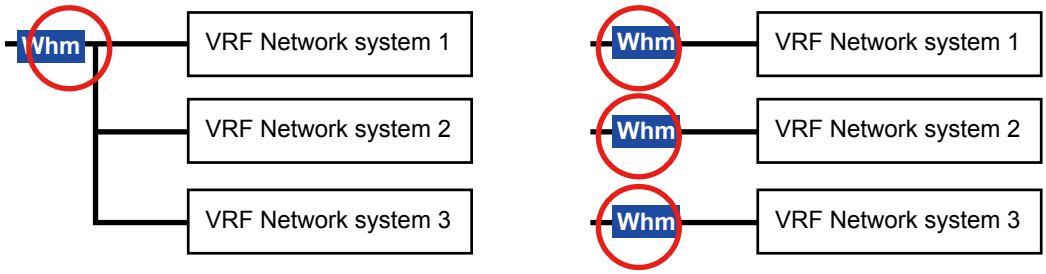

(2) Installation crossing over refrigerant systems is possible.

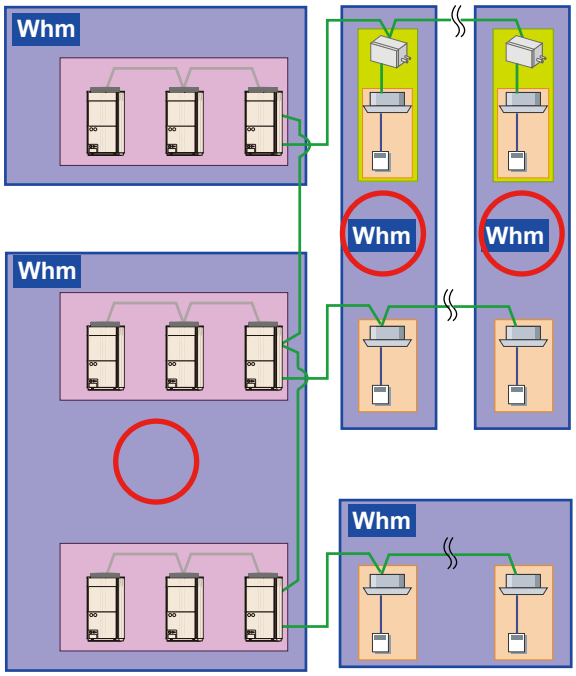

(3) Outdoor unit/indoor unit/RB unit mixed in 1 meter is possible.

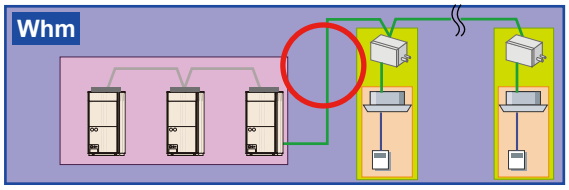

FUNCTION SETTING

■ ELECTRICITY METER SYSTEM

Electricity meter system is the connection configuration of one electricity meter and the air conditioner units which are connected to the power line under it. This is set on the System Controller.

Set the System Controller to match the actual electricity meter installation configuration.

Since the electricity charge apportionment function/energy saving function perform control using the power consumption data from an electricity meter, it is necessary to set an electricity meter system on the System Controller.

When installing electricity meters as shown below, 5 electricity meters systems are set.

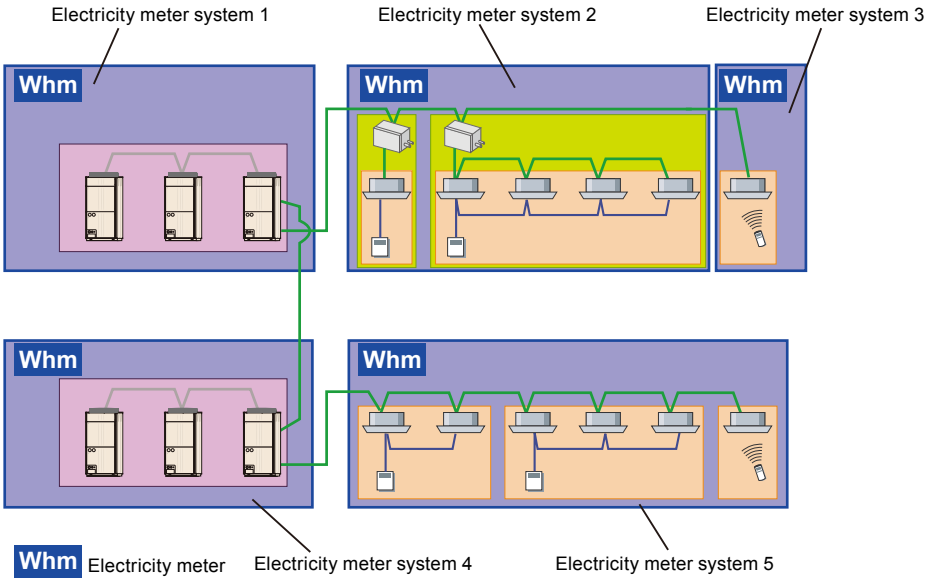

FUNCTION SETTING

■ SETTING OF OUTDOOR UNIT AND SYSTEM CONTROLLER

To obtain the appropriate power consumption by System Controller, the power value measured by an electricity meter must be properly conveyed. To do this, appropriate setting at the electricity meter, outdoor unit, and System Controller is necessary. The method of setting the pulse from the electricity meter received by an outdoor unit and the method of setting the pulse value set by system controller are described here. When electricity meter setting is necessary, perform it in accordance with the instruction manual supplied with the electricity meter.

Below, the setting method of electricity meters specified in pulse units and that specified in pulse constant are described.

(1) When electricity meter used is specified in pulse units
The connection configuration is shown below.

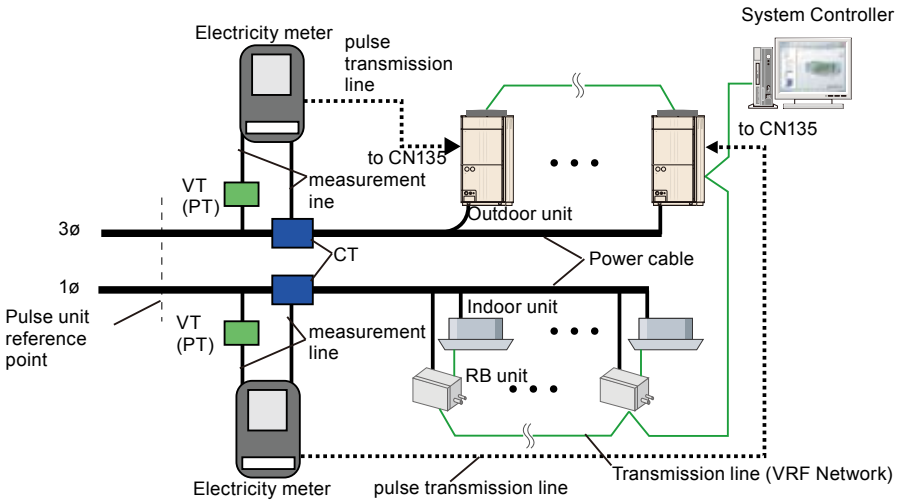

For the electricity meter specified in pulse units, the output pulses are normalized in advance (normally 1kWh/pulse) and is output. In this case, the settings are as follows:

Set point	Set item	Set value	Description	Remarks
Electricity meter	Set in accordance with the product manual.	-	When there is a product unique setting, setting is performed in accordance with the product manual. (Pulse units value, VT/CT ratio, output coefficient, etc.)	
Outdoor unit	Meter No. setting	Arbitrary	Set an unique electricity meter No. for electricity meter identification.	The information will become necessary when setting System Controller later. Refer also to 6-6-1 OUTDOOR UNIT.
	Electricity meter pulse setting	1	Fixed to “1”. When 1 pulse comes from the electricity meter, the outdoor unit communicates “1” to the System Controller.	
System Controller	Electricity meter system setting	Units measured by electricity meter	Set the outdoor unit and indoor unit, measured by the electricity meter of the meter No. set at the outdoor unit.	The value set by each outdoor unit is used.
	Pulse setting	Electricity meter pulse units value (Usually either of 1, 10, or 100 [kWh/ pulse])	Set the pulse units specified by the electricity meter as they are. Set the number of kWh that corresponds to the “1” communicated from the outdoor unit.	Refer to the value set by each outdoor unit.

[Setting example]

Equipment conditions: VT ratio=1 (not used), CT ratio=50(250/5A), electricity meter=1kWh/pulse

Set value: Electricity meter pulse setting=1(fixed), pulse setting=1(corresponds to electricity meter used)

FUNCTION SETTING

(2) When electricity meter used is specified by pulse constant
The connection configuration is shown below.

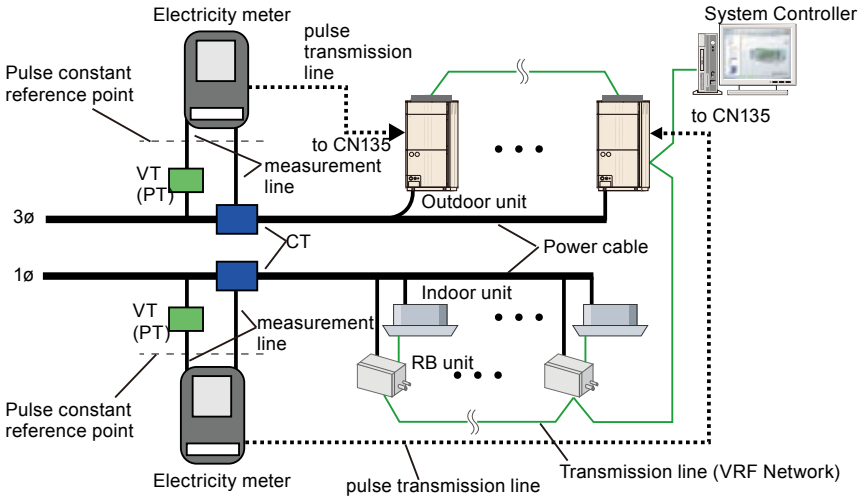

For the electricity meter specified by pulse constant, the power consumption indicated by output pulse must be corrected by VT/CT ratio. In this case, the settings are as follows:

Set point	Set item	Set value	Description	Remarks
Electricity meter	Set in accordance with the product manual.	-	When there is a product unique setting, setting is performed in accordance with the product manual. (Pulse constant value, output coefficient, etc.)	
Outdoor unit	Meter No. setting	Arbitrary	Set an unique electricity meter No. for electricity meter identification.	The information will become necessary when setting System Controller later. Refer also to Chapter 6. 2-1. OUTDOOR UNIT
	Electricity meter pulse setting	The pulse constant value / (VT ratio x CT ratio). However, truncated after the decimal point	Set the approximate number of power meter pulses that are equivalent to 1kWh. When set number of pulses come from the electricity meter, the outdoor unit communicates “1” to the system controller.	
System controller	Electricity meter system setting	Unit to be measured by electricity meter	Sets the outdoor unit and indoor unit, measured by the electricity meter of the meter No. set at the outdoor unit.	The value set by each outdoor unit is used.
	Pulse setting	(Electricity meter pulse setting value) x (VT ratio x CT ratio)/pulse constant Values after the decimal point must be also input. *1	Set the standard number of kWh for the value communicated from the outdoor unit. Set the number of kWh that corresponds to the “1” communicated from the outdoor unit.	Refer to the value set by each outdoor unit.

*1: Input up to 6 decimal digits

[Setting example]

Equipment conditions: VT ratio=1 (not used), CT ratio=500(2500/5A), electricity meter=3200 pulse/kWh

Set value: Electricity meter pulse setting=6 (3200/ (1x500)),
Pulse setting=0.9375 (6x (1x500)/3200) ---Refer to the calculating formula of the table above.

FUNCTION SETTING

Refrigerant R410A INVERTER

AIRSTAGE™
Variable Refrigerant Flow System

8. EXTERNAL INPUT & OUTPUT

DTV_VR2E018E_03--CHAPTER08
2013.04.01

CONTENTS

8. EXTERNAL INPUT & OUTPUT

1. EXTERNAL INPUT & OUTPUT ..... 08 - 01
1-1. OUTDOOR UNIT ..... 08 - 01
1-1-1. EXTERNAL INPUT ..... 08 - 03
1-1-2. EXTERNAL OUTPUT ..... 08 - 05
1-1-3. PARTS ..... 08 - 06
1-1-4. OUTDOOR UNIT EXTERNAL INPUT / OUTPUT FUNCTION SUMMARY ..... 08 - 07
1-2. INDOOR UNIT ..... 08 - 08
1-2-1. EXTERNAL INPUT ..... 08 - 08
1-2-2. EXTERNAL OUTPUT ..... 08 - 21
1-2-3. PARTS ..... 08 - 23
1-2-4. INDOOR UNIT EXTERNAL INPUT / OUTPUT FUNCTION SUMMARY .. 08 - 24
1-3. RB UNIT ..... 08 - 25
1-3-1. EXTERNAL INPUT ..... 08 - 25
1-3-2. PARTS ..... 08 - 28
1-4. TOUCH PANEL CONTROLLER ..... 08 - 29
1-4-1. EXTERNAL INPUT ..... 08 - 29
1-4-2. EXTERNAL OUTPUT ..... 08 - 32
1-4-3. PARTS ..... 08 - 32
1-5. CENTRAL REMOTE CONTROLLER ..... 08 - 33
1-5-1. EXTERNAL INPUT ..... 08 - 33
1-5-2. EXTERNAL OUTPUT ..... 08 - 36
1-5-3. PARTS ..... 08 - 36
1-5-4. CONTROLLER EXTERNAL INPUT / OUTPUT FUNCTION SUMMARY . 08 - 37

1. EXTERNAL INPUT & OUTPUT

Note :

The length regulations of the cable are as shown in the following figures.

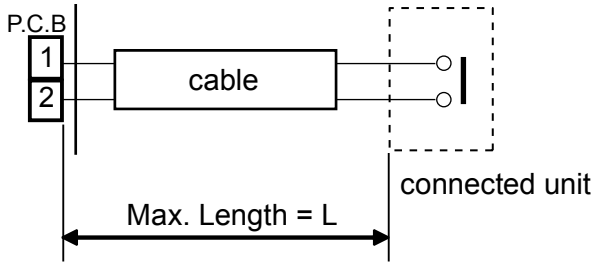

Type	L (m) Input / Output
Outdoor unit	150 / 150
Indoor unit	150 / 25
RB unit	150 / -
Touch Panel Controller	25 / 25
Central Remote Controller	

1-1. OUTDOOR UNIT

External input	External output	Connector	VR-II	V-II	J-II
Low noise mode	-	CN131	○	○	○
Cooling/Heating priority	-	CN132	×	○	○
Outdoor unit operation peak control	-	CN133	○	○	○
Emergency/batch stop	-	CN134	○	○	○
Electricity meter pulse	-	CN135	○	○	○
-	Error status	CN136	○	○	○
-	Operation status	CN137	○	○	○
-	Base heater	CN115	○	○	○

■ TERMINAL POSITION

● VR-II series and V-II series

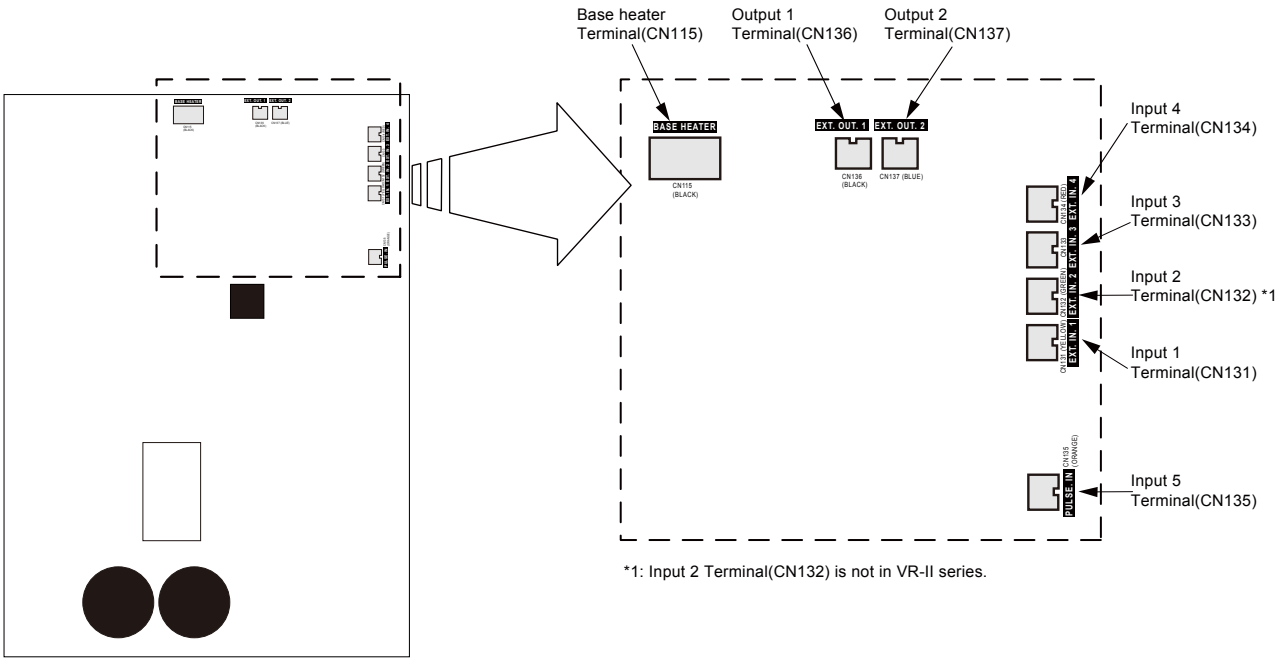

*1: Input 2 Terminal(CN132) is not in VR-II series.

Outdoor unit printed circuit board

EXTERNAL INPUT & OUTPUT

■ TERMINAL POSITION

● J-II series

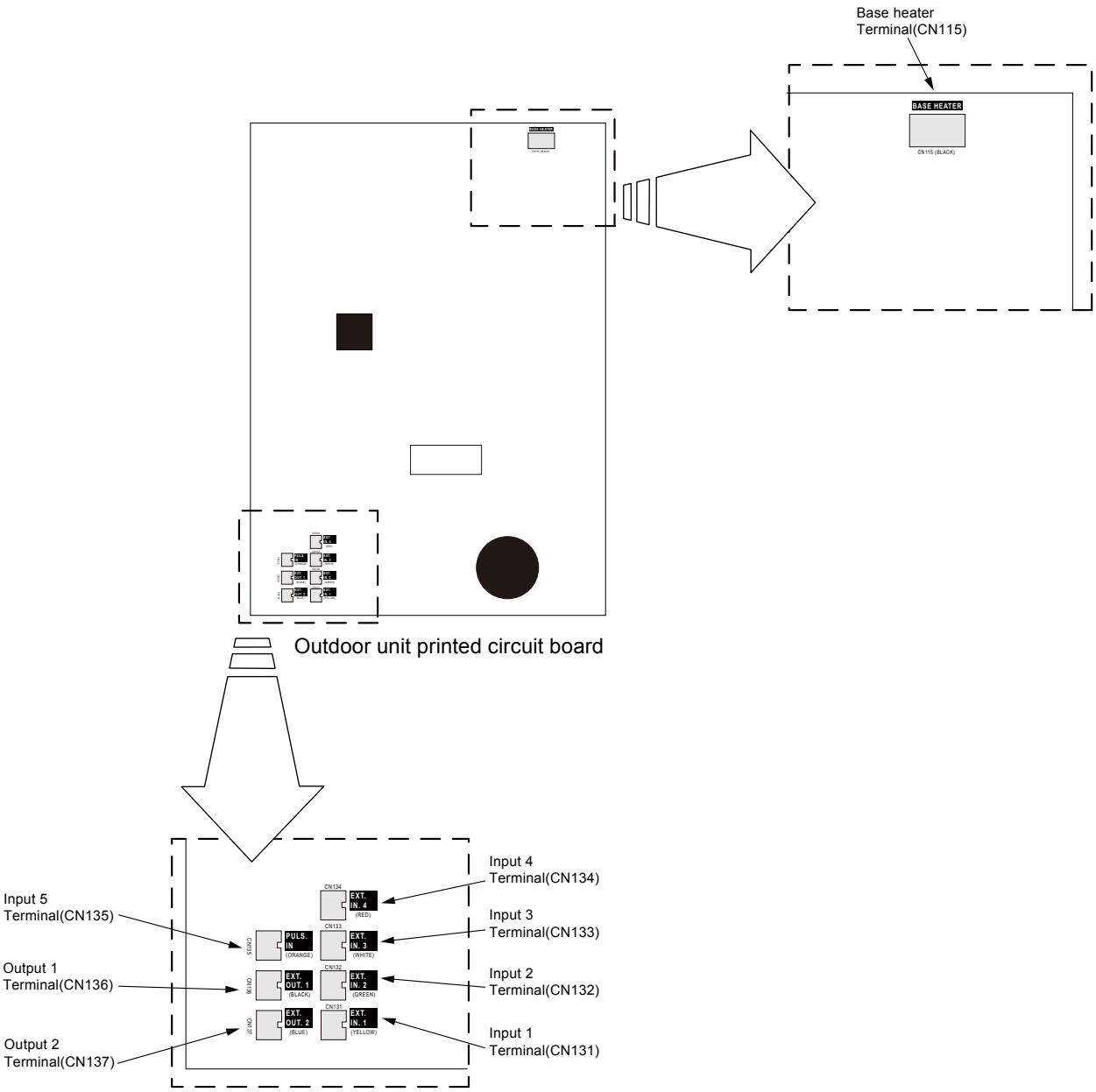

EXTERNAL INPUT & OUTPUT

1-1-1. EXTERNAL INPUT

Setting to "Low noise mode", "Cooling priority/heating priority selection", "Outdoor unit operation peak control", "Emergency/batch stop" and "Electricity meter pulse" are possible from the outside.

■ WIRING METHOD AND SPECIFICATIONS

*A twisted pair cable (22AWG) shoud be used. Maximum length of cable is 150m.

*Use an external input and output cable with appropriate external dimension, depending on the number of cables to be installed

*For each input, pin No.1 is of positive polarity and pin No.2 is of ground level.

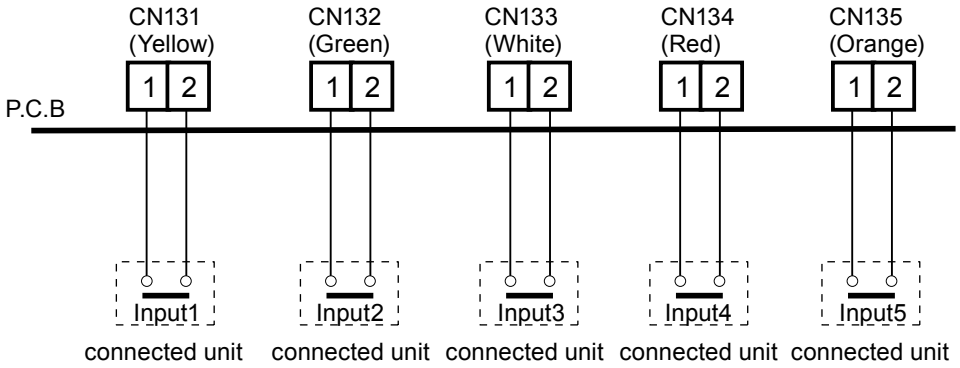

■ OPERATION BEHAVIOR

Connector	Input signal	Status	Outdoor unit	
			Master	Slave
CN131 (Yellow)	OFF	Normal operation	○	×
	ON	Low noise mode operation		
CN132 (Green) *1	OFF	Cooling priority	○	×
	ON	Heating priority		
CN133 (White)	OFF	Normal operation	○	×
	ON	Outdoor unit operation peak control		
CN134 (Red)	OFF	Normal operation	○	×
	ON	Batch stop or Emergency stop operation *2, *3		
CN135 (Orange) *4	No pulse	No information from electricity meter	○	○
	Pulse	Power usage information from electricity meter		

Slave unit can connect only input5 (CN135).

Note :

*1: The "external input priority mode" must be set by pressing push button on PC board of outdoor unit.

*2: Batch stop or Emergency stop pattern can be selected by outdoor unit PC board push button.

*3: The emergency stop function mounted in the V-II does not guarantee the regulations of each country. For this reason, sufficient checking is necessary regarding use.
Especially, since the fact that the equipment may not be emergency-stopped in the case of breaking of the wiring to the external input terminals and communication line, communication error due to noise, VRF external input circuit trouble, etc. must be considered, the provision of double measures that add direct interruption of the power supply by switch, etc. is recommended as a precaution.

*4: Pulse input to CN135 must be width 50ms or more, and must be interval 50ms or more.

EXTERNAL INPUT & OUTPUT

● When function setting is "Batch stop" mode

Connector	Input signal	Command
CN134	OFF → ON	Batch stop
	ON → OFF	-

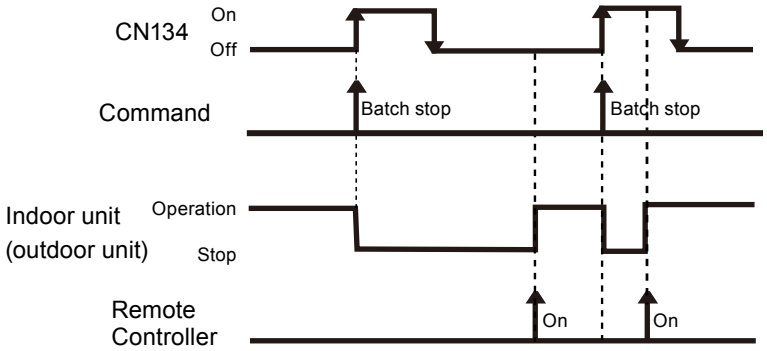

NOTE :

- All indoor units of same refrigerant system stops when Batch stop operates.
- After batch stop operates, the operation by remote controller is possible.

● When function setting is "Emergency stop" mode

Connector	Input signal	Command
CN134	ON	Emergency stop
	OFF	Normal

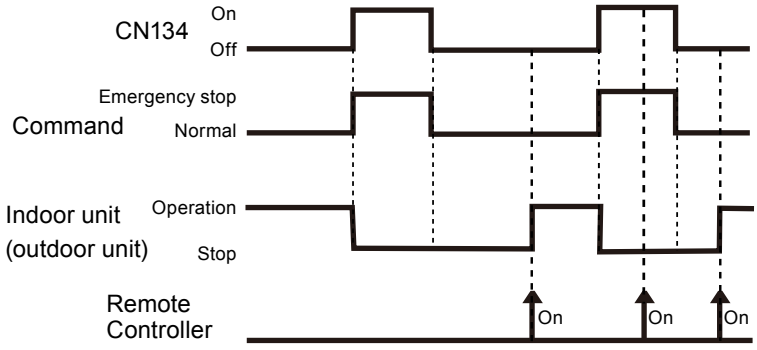

NOTE :

- All indoor units of same refrigerant system stops when Emergency stop operates.
- When the Emergency stop is triggered, indoor unit stops and Start/Stop operation by a remote controller is restricted.

EXTERNAL INPUT & OUTPUT

1-1-2. EXTERNAL OUTPUT

Connector	Output voltage	Status
CN136 (Black)	0V	Normal
	DC 12-24 V *4	Error
CN137 (Blue)	0V	Stop
	DC 12-24 V *4	Operation

■ ERROR STATUS (Master unit only)

This output indicates the outdoor unit and connected indoor unit's "Normal" or "Error" status.

■ OPERATION STATUS (Master unit only)

This output indicates the outdoor unit's "Operation" status.

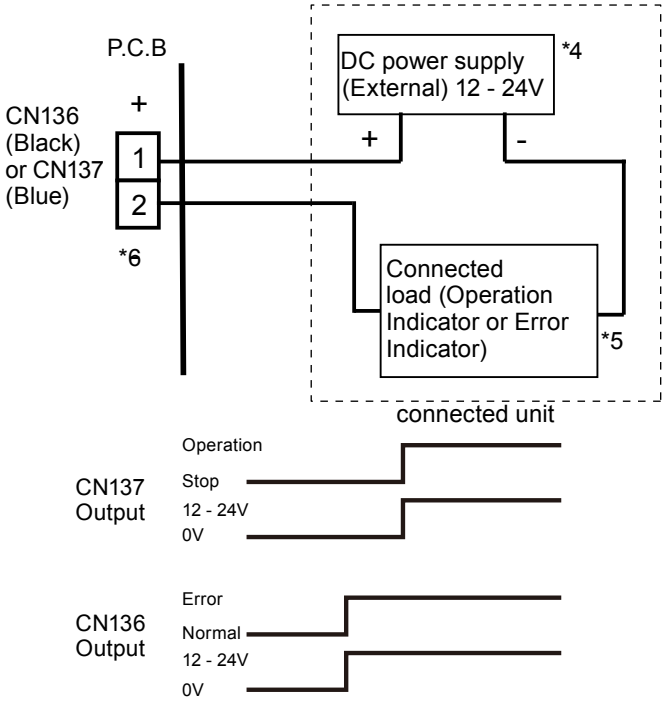

*4: Provide a DC12 to 24V power supply. Select a power supply capacity with an ample surplus for the connected load.

*5: The allowable current is 30mA or less. Provide a load resistance such that the current becomes 30mA or less.

*6: Polarity is [+] for pin 1 and [-] for pin 2. Connect correctly.
Do not impress a voltage exceeding 24V across pins 1-2.

*A twisted pair cable (22AWG) shoud be used. Maximum length of cable is 150m.

*Use an external input and output cable with appropriate external dimension, depending on the number of cables to be installed.

■ BASE HEATER

This is the output signal for base heater. Output signal ON, when the outdoor temperature goes down below 2°C, and signal OFF at the outdoor temperature 4°C.

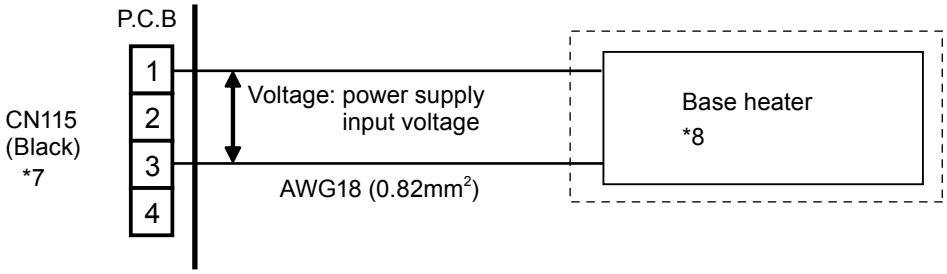

*7: Connect to pin 1 and pin 3. No connection pin2 and pin4.

*8: The allowable current is 1A or less.

EXTERNAL INPUT & OUTPUT

1-1-3. PARTS

To connect base heater, the following cord (service parts) is required. Please use the parts number shown below to order the cord from your sales representative.

Usage	Name and shapes	Q'ty	Parts No.
For external input For external output (Error display, Operation display)	EXTERNAL INPUT WIRE A 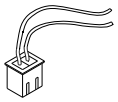	1	9368777005
For external output (Base heater)	WIRE WITH CONNECTOR 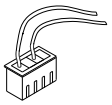	1	9708642000

EXTERNAL INPUT & OUTPUT

1-1-4. OUTDOOR UNIT EXTERNAL INPUT / OUTPUT FUNCTION SUMMARY

■ OUTDOOR UNIT EXTERNAL INPUT FUNCTION

Item	Dry contact / Apply voltage	Function						Specifications	
		Emergency stop	Low noise mode operation	Cooling/ Heating priority	Outdoor unit operation peak control	Batch stop	Power usage information from electricity meter	Terminal	Signal type
Outdoor unit input function specification	Dry contact DC12[V]	-	● *2	-	-	-	-	CN 131 (PIN 1-2)	Edge
		-	-	●	-	-	-	CN 132 (PIN 1-2)	
		-	-	-	● *1	-	-	CN 133 PIN 1-2)	
		● (20-01)	-	-	-	● (20-00)	-	CN 134 (PIN 1-2)	
	-	-	-	-	-	-	●	CN 135 (PIN 1-2)	Pulse

*1 : If you use Outdoor unit operation peak control, select energy saving level from below.
30-00 Energy saving level 1 (Stop)
30-01 Energy saving level 2 (Operated at 40% capacity)
30-02 Energy saving level 3 (Operated at 60% capacity)
30-03 Energy saving level 4 (Operated at 80% capacity)
30-03 Energy saving level 5 (Operated at 100% capacity)

*2 : If you use Low noise mode operation, select low noise level from below.
42-00 Low noise level 1 (lower than rated value)
42-01 Low noise level 2 (lower than level 1)

NOTE :

- For selecting relay, minimum permissible load must be less than 1(mA).
- When you use Apply voltage, Take "+" polarity for PIN 1
- Number inside bracket "()" indicates function number and setting number.
- Expression "●" is equipping function.
- Default setting is Edge signal.
- If you use pulse signal, must be set Dip SW2-2 to ON position.

■ OUTDOOR UNIT EXTERNAL OUTPUT FUNCTION

Item	Dry contact / Apply voltage	Function			Specifications			
		Operation status	Error status	Base heater	Terminal	Terminal output voltage	External power supply	
							Allowable voltage	Allowable current
Outdoor unit output function specification	Apply voltage	-	●	-	CN 136 (PIN 1-2)	-	DC12-24 [V]	30 mA or less
		●	-	-	CN 137 (PIN 1-2)			
	Dry contact	-	-	●	CN 115 (PIN 1-3)	AC240 [V]	-	1 A or less

NOTE :

- When you use Apply voltage, Take "+" porarity for PIN 1
- Expression "●" is equipping function.

EXTERNAL INPUT & OUTPUT

1-2. INDOOR UNIT

External input	External output	Connector
Control input	-	CNA01 or CNA02
Forced thermostat off	-	CNA03 or CNA04
-	Operation status	CNB01
-	Error status	
-	Indoor unit status	
-	Auxiliary heater output	

1-2-1. EXTERNAL INPUT

- Indoor unit can be Operation/Stop or Emergency stop or Forced stop by using indoor unit PCB CNA01 or CNA02.
- "Start/Stop" mode or "Emergency stop" mode or "Forced stop" mode can be selected with function setting of indoor unit.
- Indoor unit can be Forced thermostat off by using indoor unit PCB CNA03 or CNA04.
- A twisted pair cable (22AWG) shoud be used. Maximum length of cable is 150m.
- Use an external input and output cable with appropriate external dimension, depending on the number of cables to be installed.
- The wire connection should be separate from the power cable line.

■ INPUT SELECT

Use either one of these types of terminal according to the application. (Both types of terminals cannot be used simultaneously.)

● Apply voltage terminal ([CNA01], [CNA03])

When a power supply must be provided at the input device you want to connect, use the Apply voltage terminal ([CNA01], [CNA03])

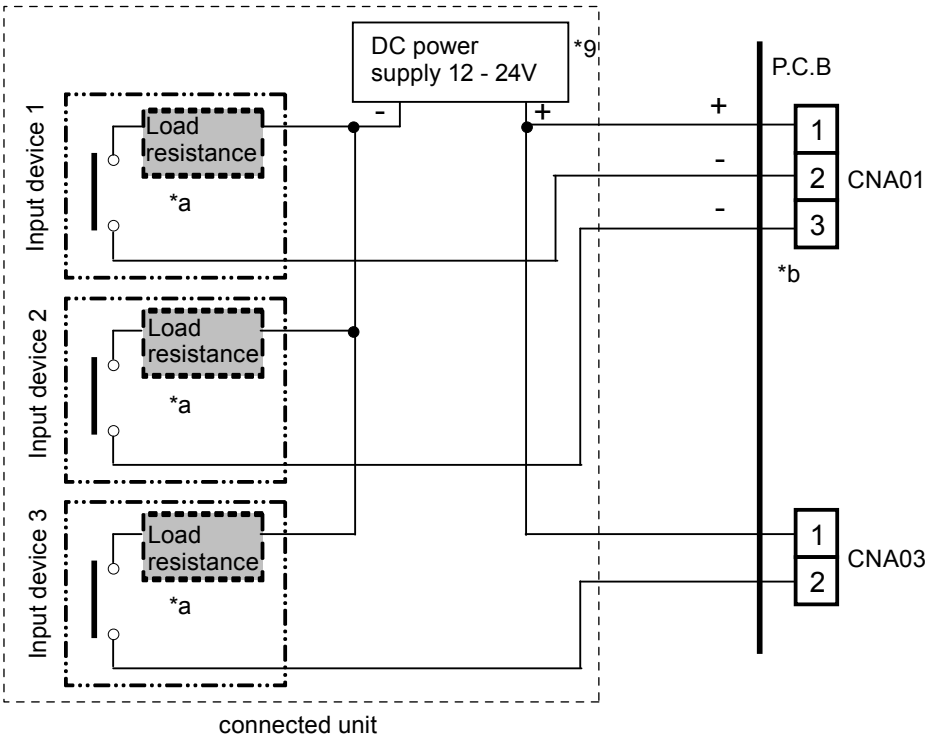

*9: Make the power supply DC12 to 24V. Select a power supply capacity with an ample surplus for the connected load.

Do not impress a voltage exceeding 24V across pins 1-2, and 1-3.

*a: The allowable current is DC 5mA to 10mA. (Recommended: DC5mA)

Provide a load resistance such that the current becomes DC10mA or less.

Select very low current use contacts (usable at DC12V, DC1mA or less).

*b: The polarity is [+] for pin 1 and [-] for pin 2 and 3. Connect correctly.

EXTERNAL INPUT & OUTPUT

When connected to Apply voltage terminals of multiple indoor units with a connected unit, be sure to make a branch outside the indoor unit using a pull box, etc. as shown on below example.

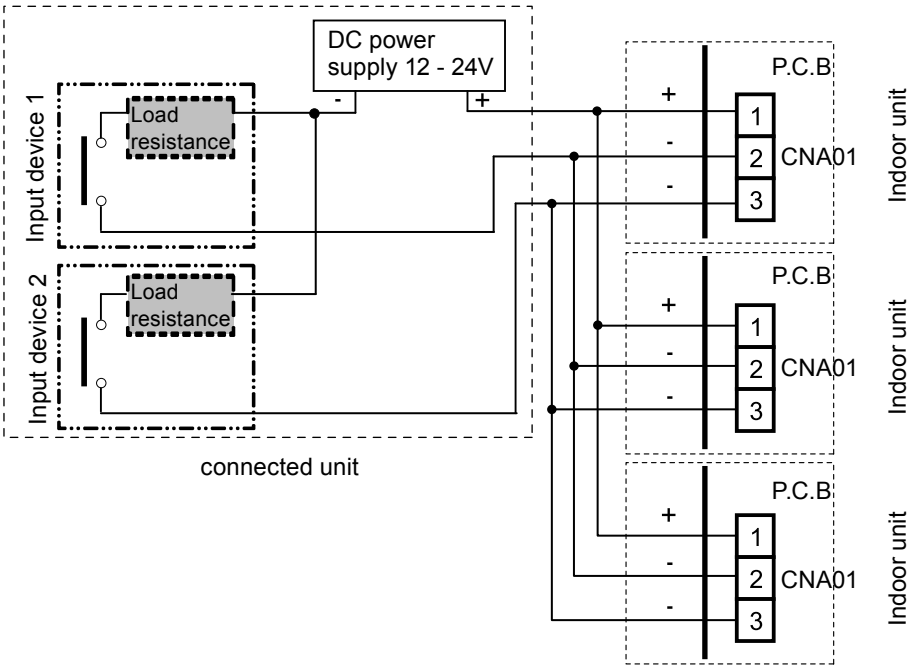

EXTERNAL INPUT & OUTPUT

● Dry contact terminal ([CNA02], [CNA04])

When a power supply is unnecessary at the input device you want to connect, use the Dry contact terminal ([CNA02], [CNA04]).

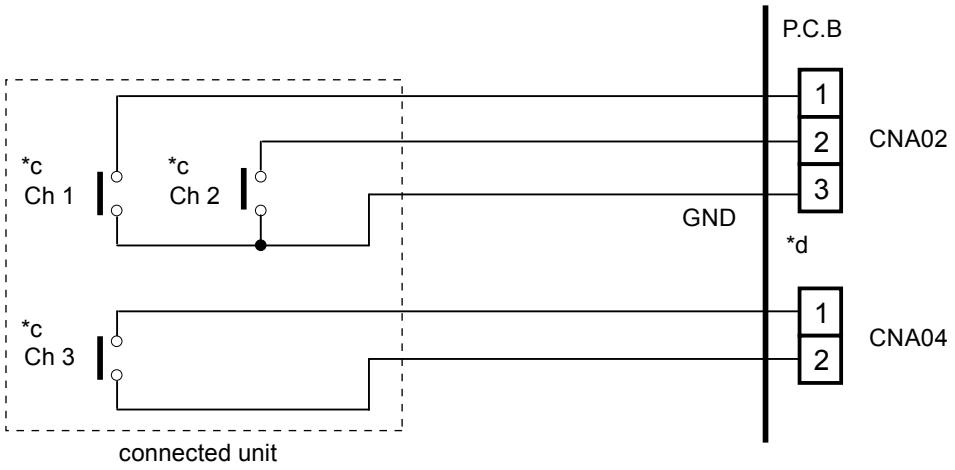

*c: Select very low current use contacts (usable at DC12V, DC1mA or less).

*d: The wiring is different from Apply voltage terminals. Be sufficiently careful when wiring.

When connected to Dry contact terminals of multiple indoor units with a connected unit, insulate each indoor unit with relay, etc. as shown on below example.

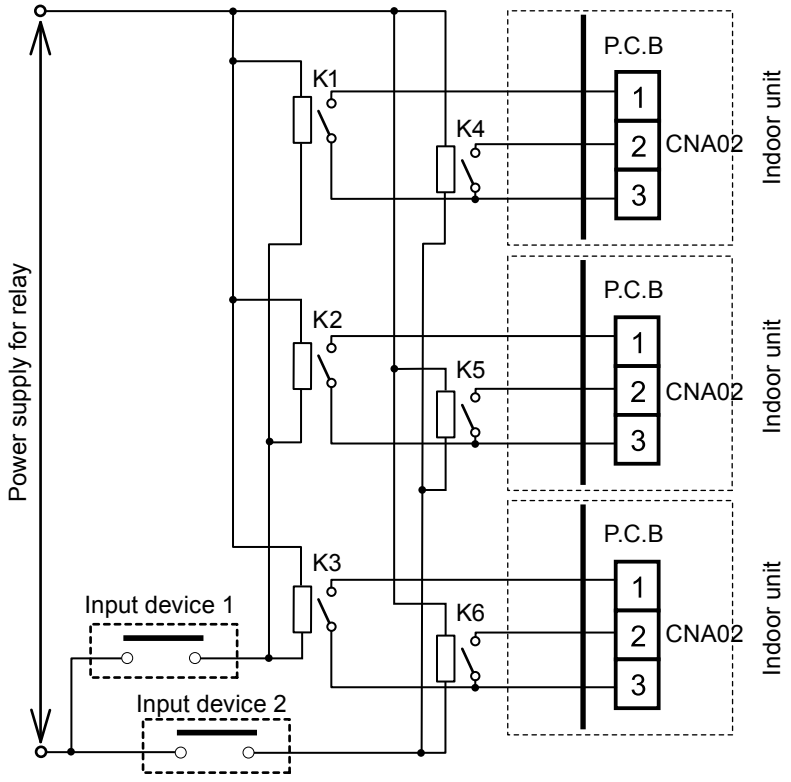

K1 - K6 : Relay
(Device for DC Current)

NOTE :

● When connected to multiple indoor units directly, it will cause breakdown.

EXTERNAL INPUT & OUTPUT

■ INPUT SIGNAL TYPE

The input signal type can be selected.

It is switched by Dip-Sw on the indoor unit PCB.

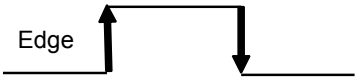

(◆...Factory setting)

	Dip-sw [Set 2-2]	Input signal type
◆	OFF	Edge
	ON	Pulse

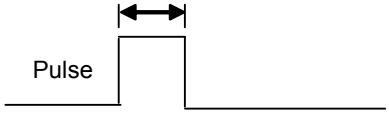

Note: input signal type of Ch3 (Forced thermostat off) is only "Edge".

■ CONTROL INPUT FUNCTION

● When function setting is "Operation/Stop" mode

●In the case of "Edge" input

Connector	Input signal	Command
Ch1 of CNA01 or CNA02	OFF → ON	Operation
	ON → OFF	Stop

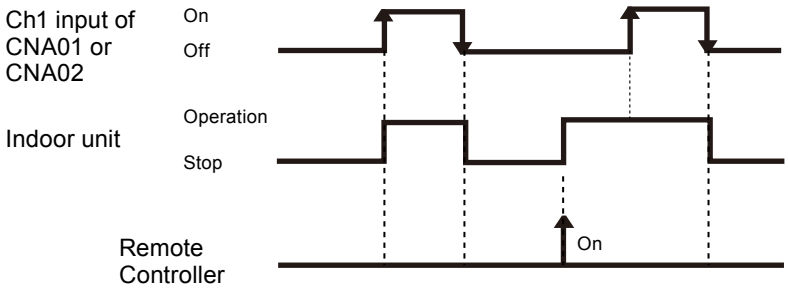

●In the case of "Pulse" input

Connector		Input signal	Command
CNA01 or CNA02	Ch1	OFF → ON	Operation
	Ch2	OFF → ON	Stop

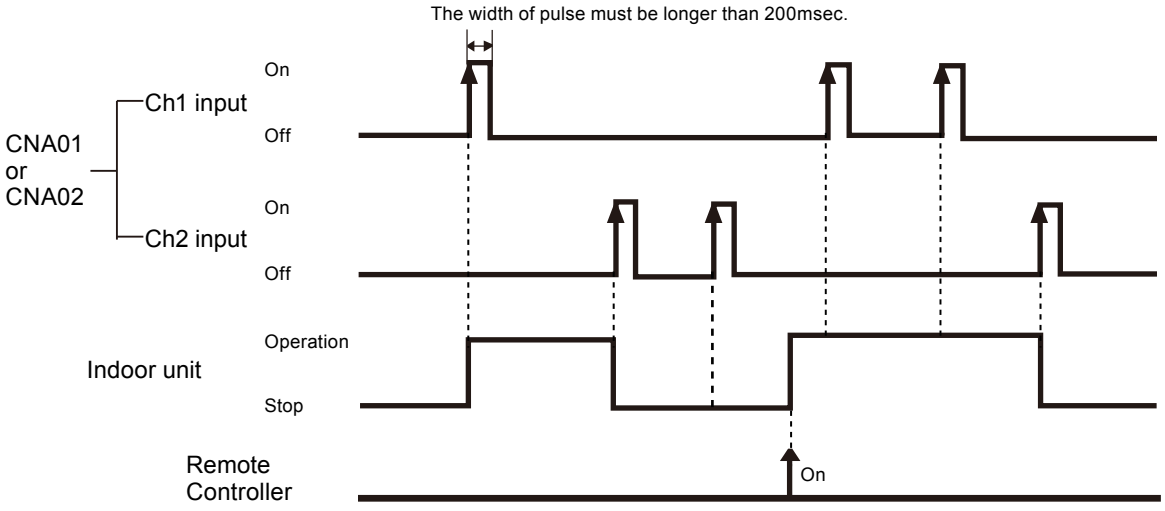

NOTE :

- The last command has priority.
- The indoor units within the same remote controller group operates in the same mode.

EXTERNAL INPUT & OUTPUT

● When function setting is "Emergency stop" mode

●In the case of "Edge" input

Connector	Input signal	Command
Ch1 of	OFF → ON	Emergency stop
CNA01 or CNA02	ON → OFF	Normal

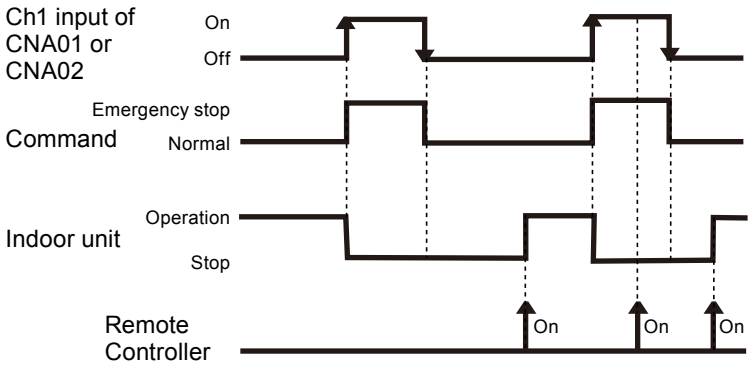

●In the case of "Pulse" input

Connector		Input signal	Command
CNA01 or CNA02	Ch1	OFF → ON	Emergency stop
	Ch2	OFF → ON	Normal

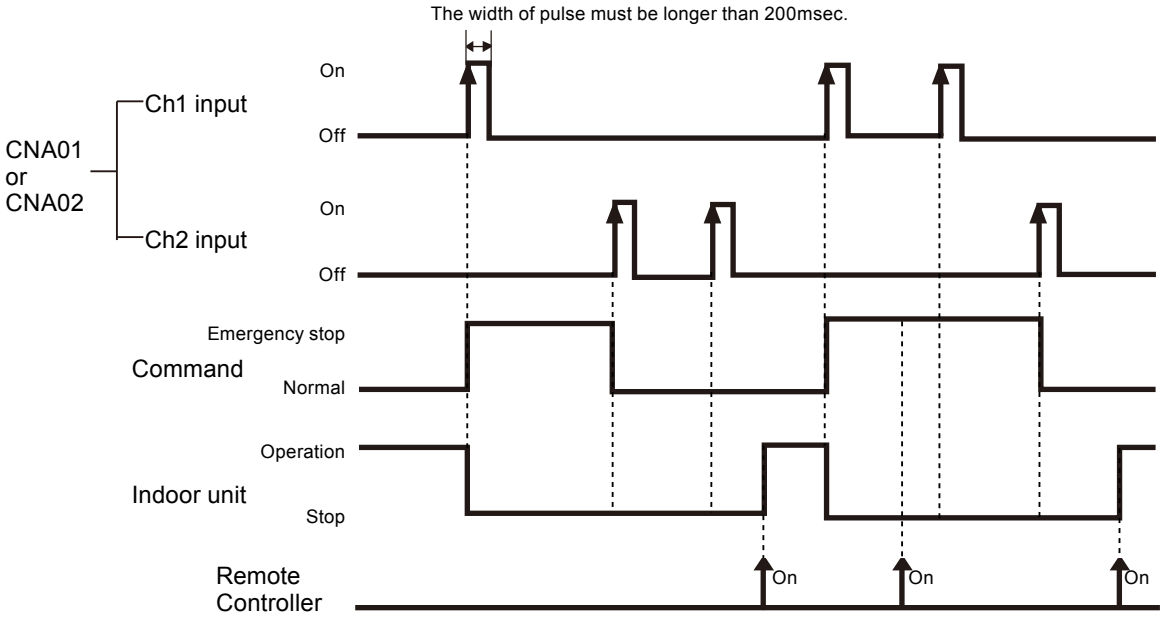

NOTE :

● All indoor units of same refrigerant system stops when Emergency stop operates.

EXTERNAL INPUT & OUTPUT

● When function setting is "Forced stop" mode

●In the case of "Edge" input

Connector	Input signal	Command
Ch1 of CNA01 or CNA02	OFF → ON	Forced stop
	ON → OFF	Normal

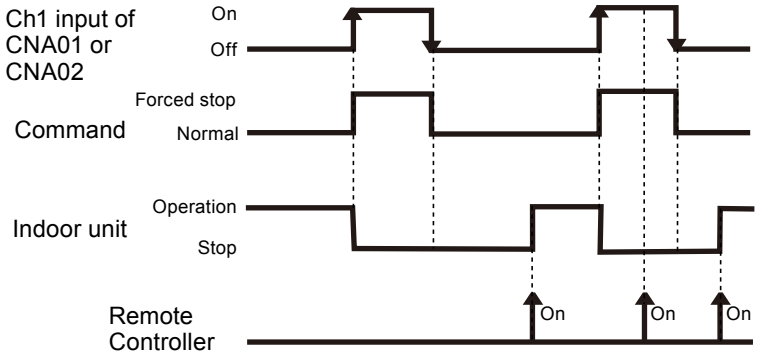

●In the case of "Pulse" input

Connector		Input signal	Command
CNA01 or CNA02	Ch1	OFF → ON	Forced stop
	Ch2	OFF → ON	Normal

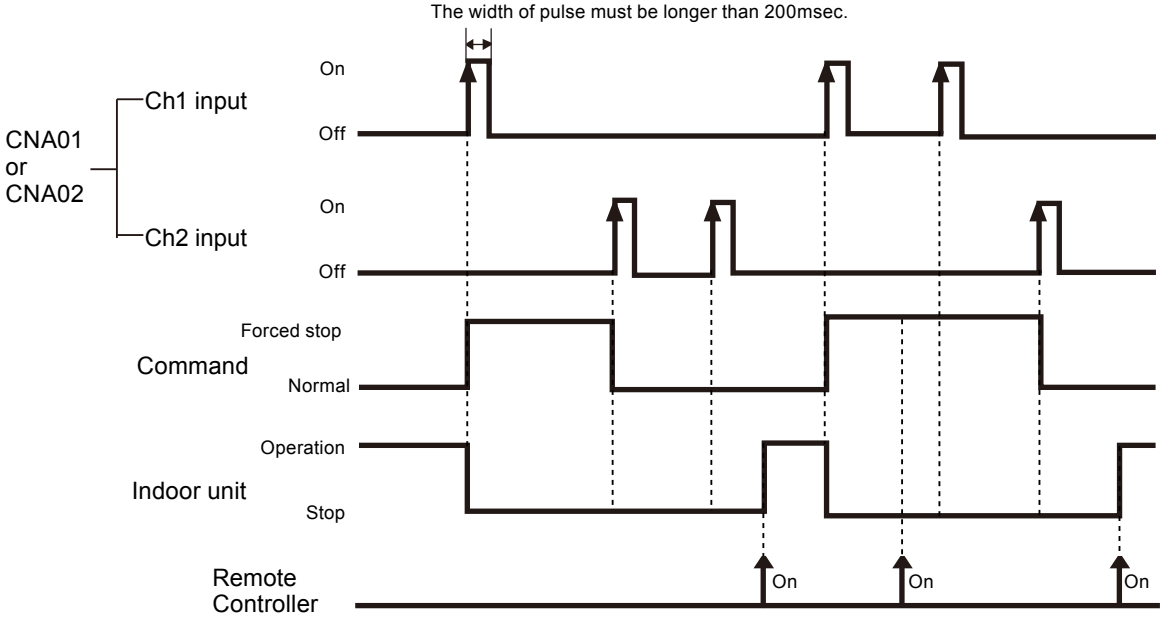

NOTE :

- When the forced stop is triggered, indoor unit stops and Operation/Stop operation by a remote controller is restricted.

EXTERNAL INPUT & OUTPUT

●Considerations when setting forced stop

⚠CAUTION
When forced stop function is used with forming a remote controller group, connect the same equipment to each indoor unit within the group.

Example 1 : OK

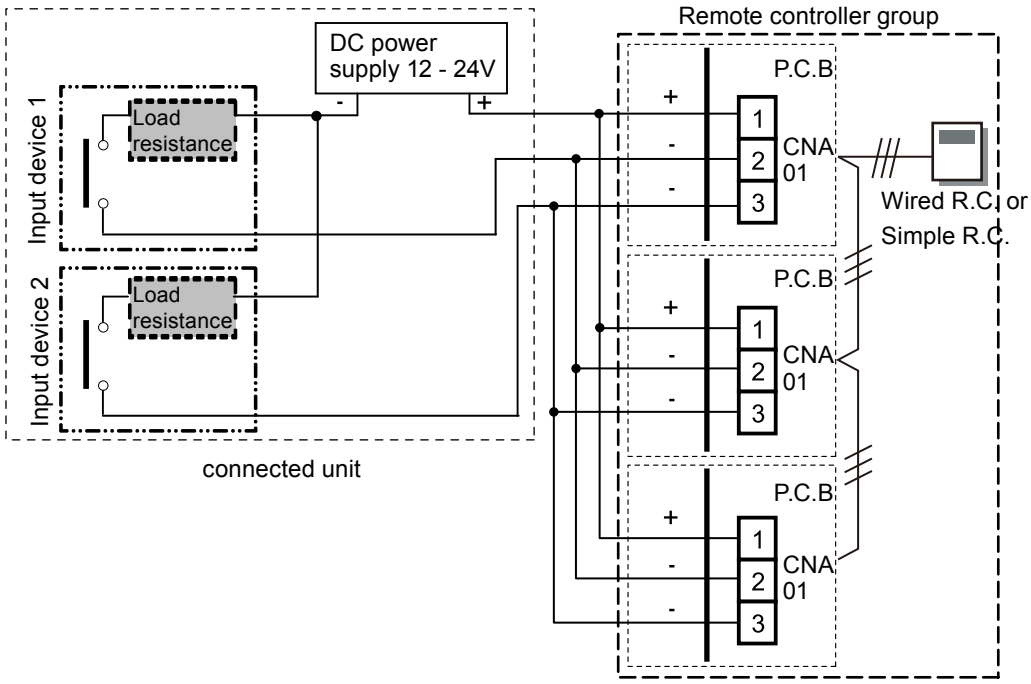

Example 2 : Prohibited

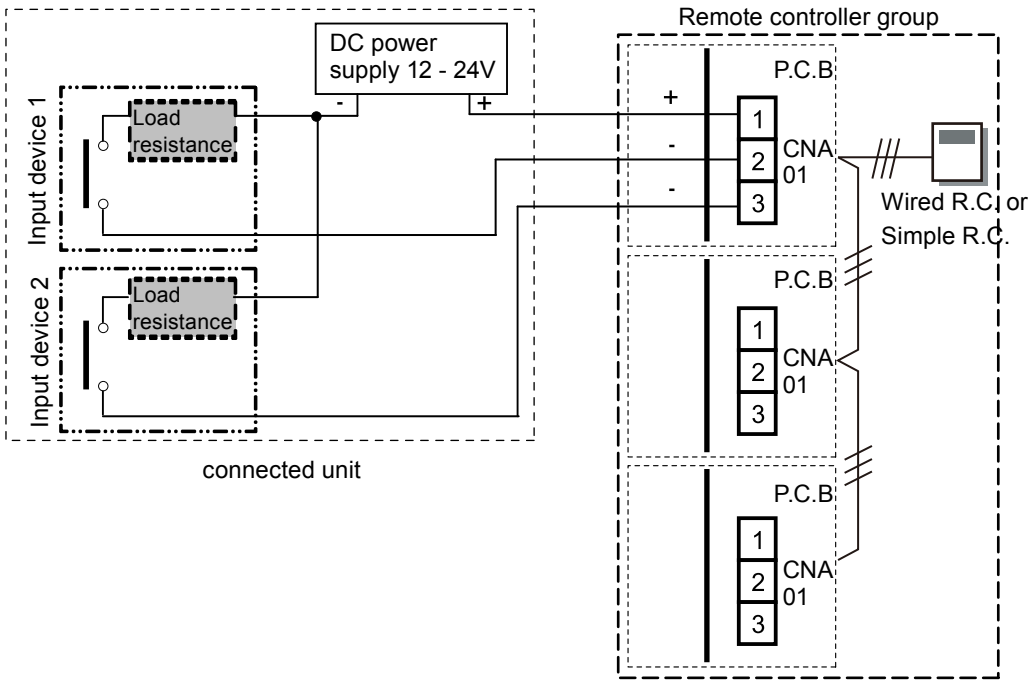

EXTERNAL INPUT & OUTPUT

■ FORCED THERMOSTAT OFF FUNCTION

●"Edge" input only

Connector	Input signal	Command
Ch3 of CNA03 or CNA04	OFF → ON	Thermostat off
	ON → OFF	Normal

Example of cooling mode

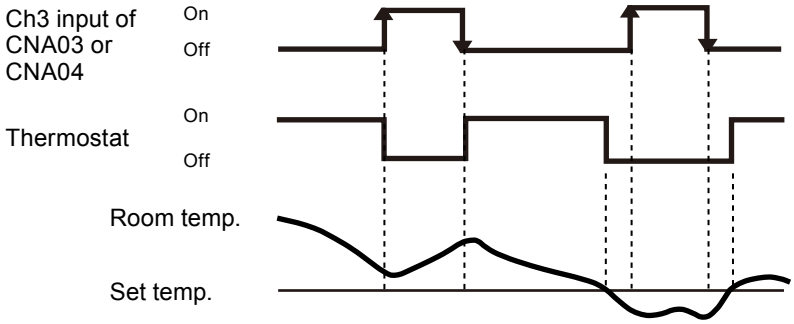

NOTE :

- Indoor unit may not do thermostat off promptly even if receive signal by operating conditions of other indoor unit of same refrigerant system.

● Example 1

Forced thermostat off is one of the function to save energy. For example, case of outdoor temperature is lower than Indoor temperature, Indoor unit of air conditioner worked as Fan operation based upon receiving signal from external controller. (Cooling Only)

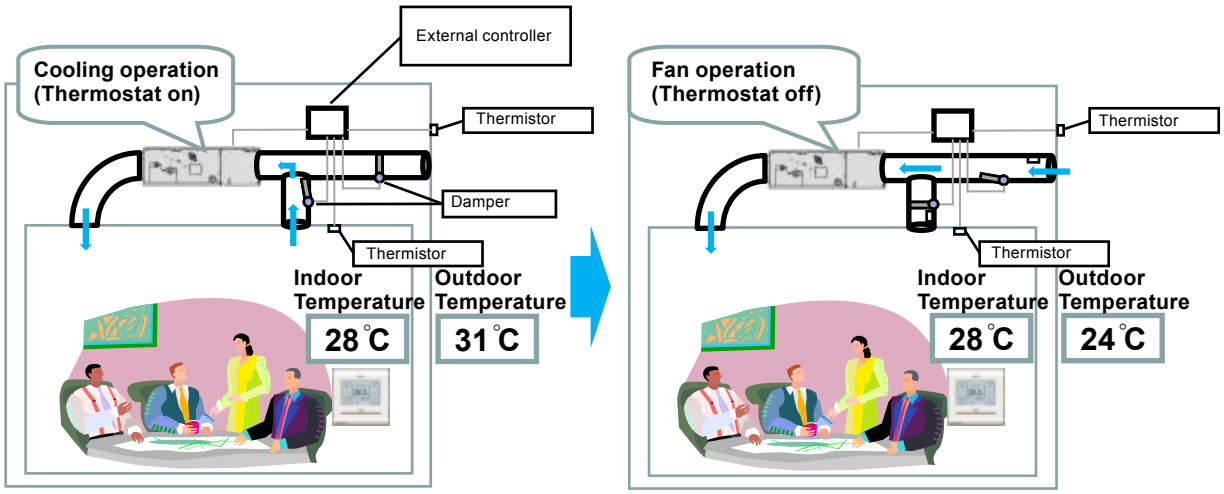

EXTERNAL INPUT & OUTPUT

●System figure example

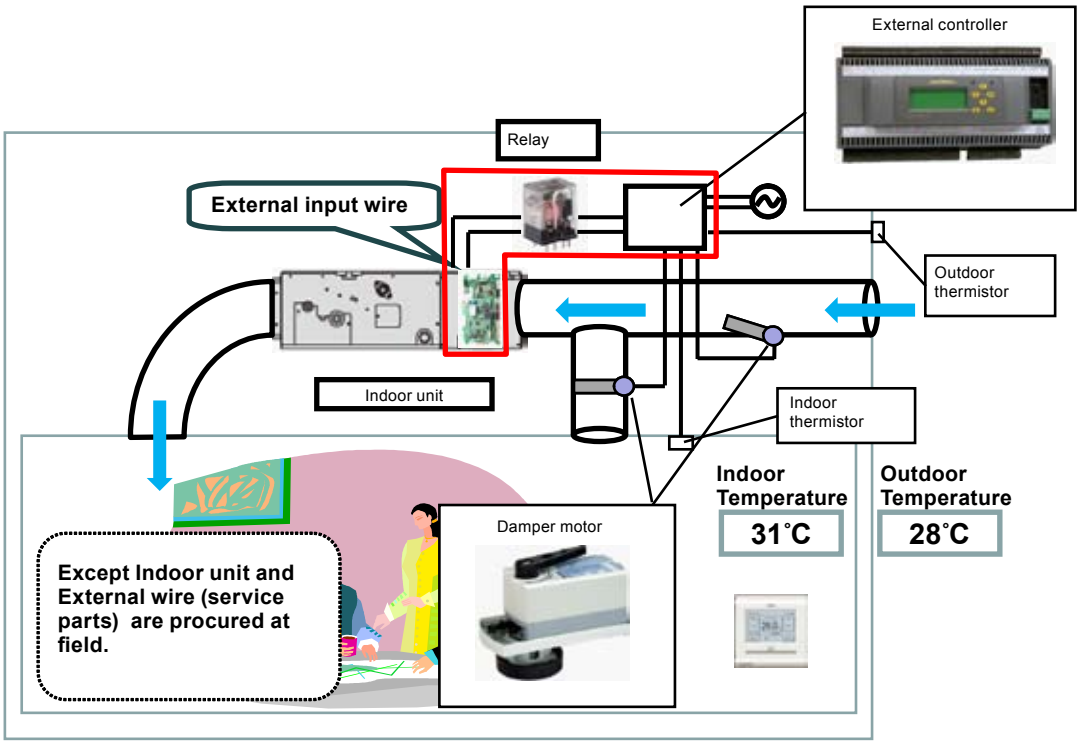

●Operation status

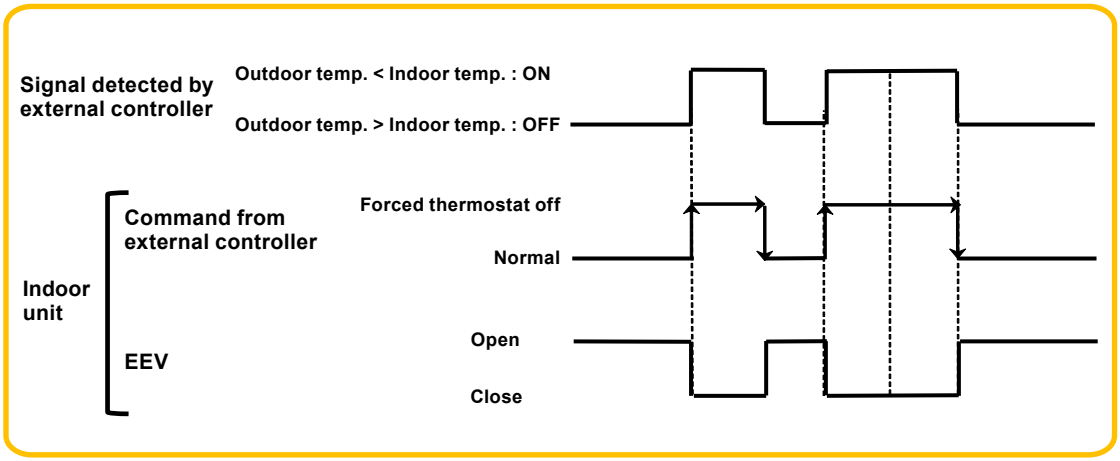

Normal means that Indoor unit is continued appropriate operation until [Forced thermostat off] signal received, at condition which are set by central and individual controller or detected by thermo sensors of indoor unit.

EXTERNAL INPUT & OUTPUT

●Function setting of indoor unit

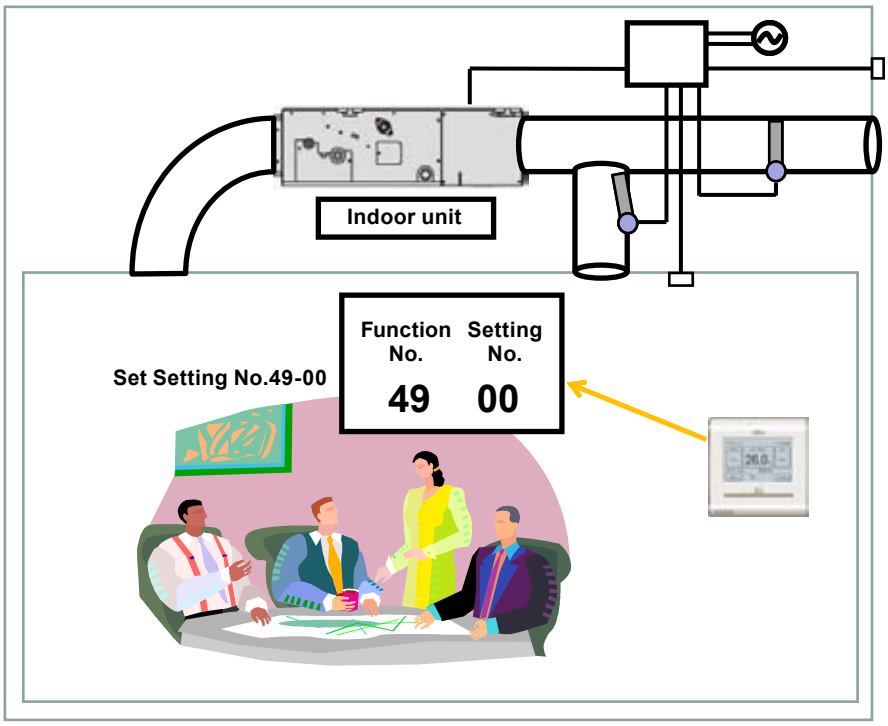

Indoor unit is continued appropriate operation until [Forced thermostat off] signal received, at condition which are set by central and individual controller or detected by thermo sensors of indoor unit. Once received [Forced thermostat off] signal received, Indoor unit start operation under Fan mode.

●Example of Electrical circuit

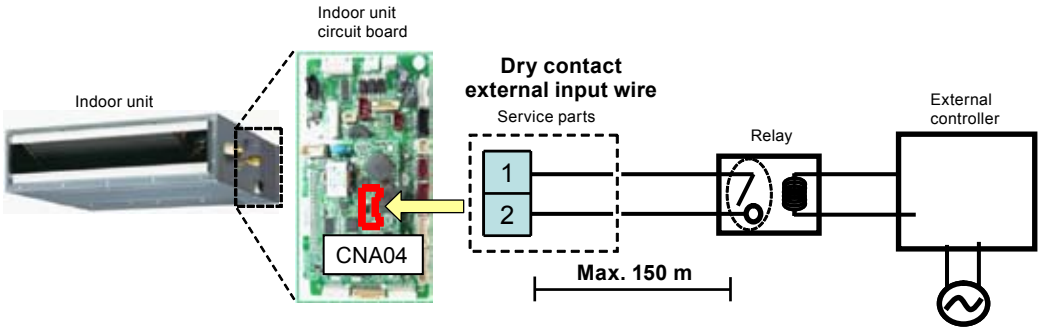

Specification of external input	
Item	Spec
Terminal	CNA04
Output voltage	DC 12V
Wire diameter	AWG22 Twist (0.33mm^2)
Service parts No.	9368778019

Requirement for relay switch	
Item	Spec
Min. permissible load	1mA or less

EXTERNAL INPUT & OUTPUT

● Example 2

Forced thermostat off is one of the function to save energy. For example, case of using ventilator at condition with outdoor temperature is lower than Indoor temperature, Indoor unit of air conditioner stop based upon receiving signal from external controller. (Cooling Only)

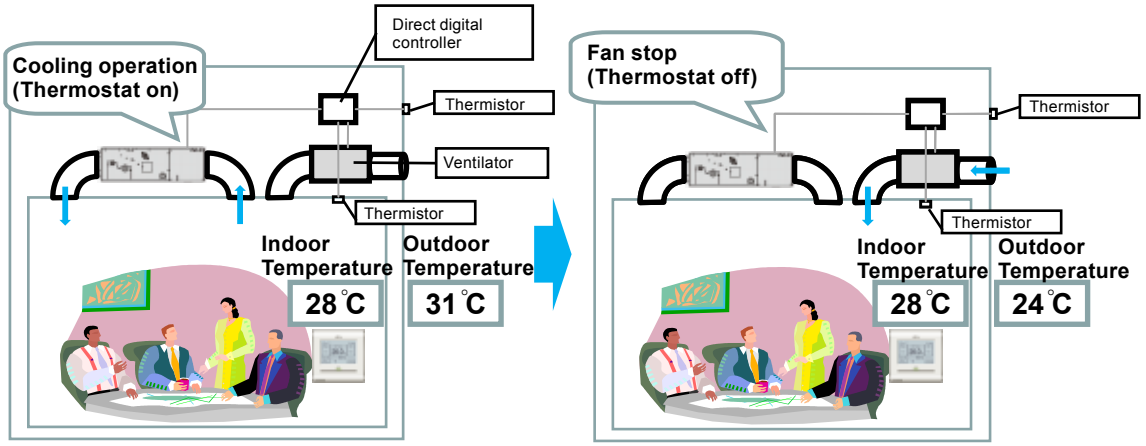

●System figure example

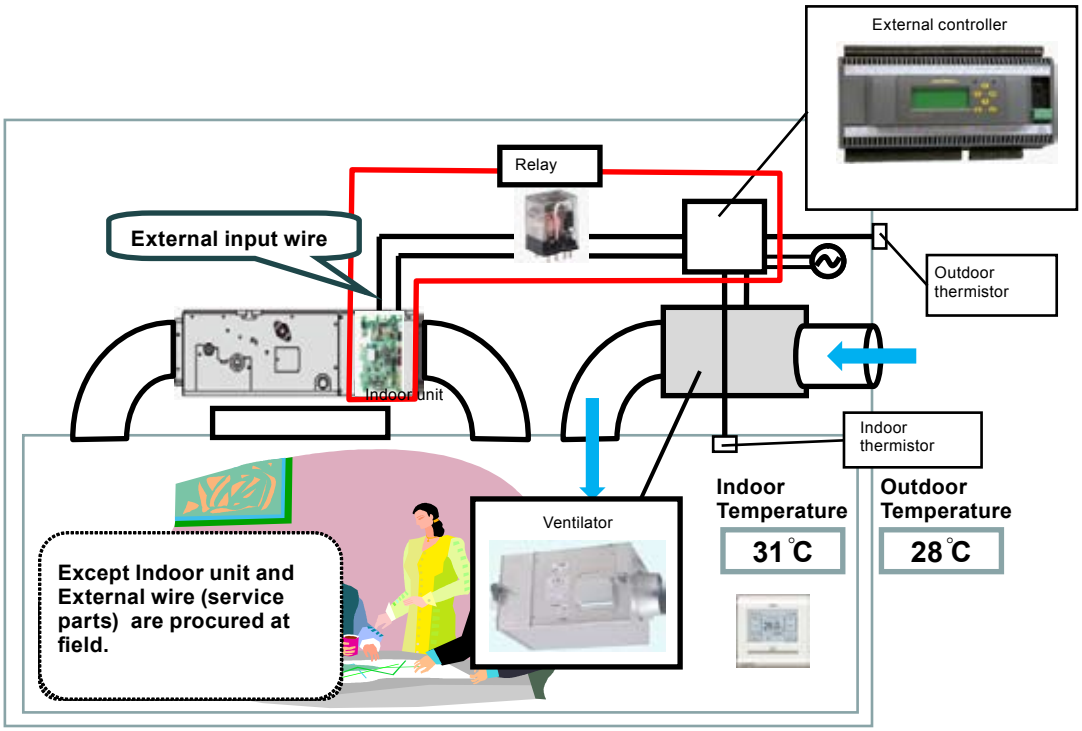

EXTERNAL INPUT & OUTPUT

●Operation status

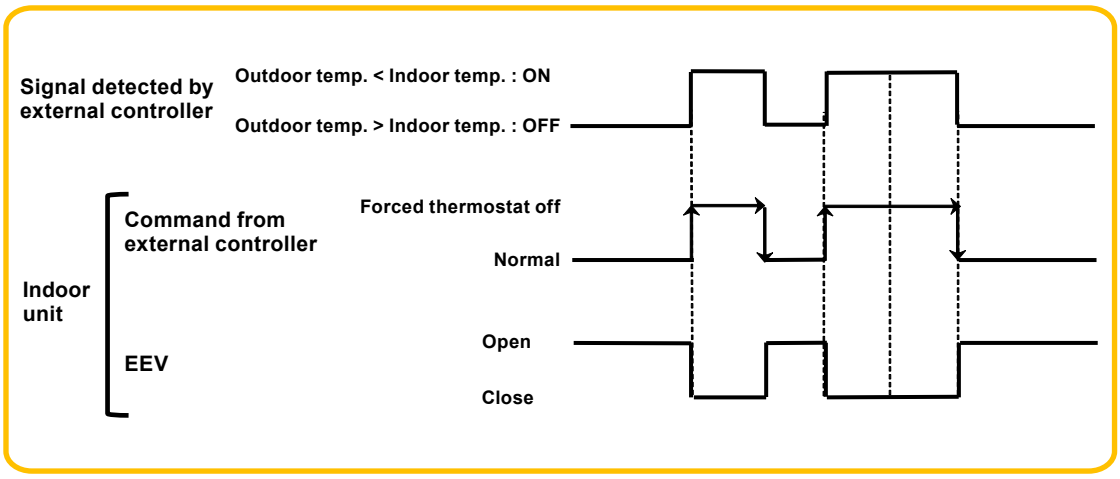

Normal means that Indoor unit is continued appropriate operation until [Forced thermostat off] signal received, at condition which are set by central and individual controller or detected by thermo sensors of indoor unit.

●Function setting of indoor unit

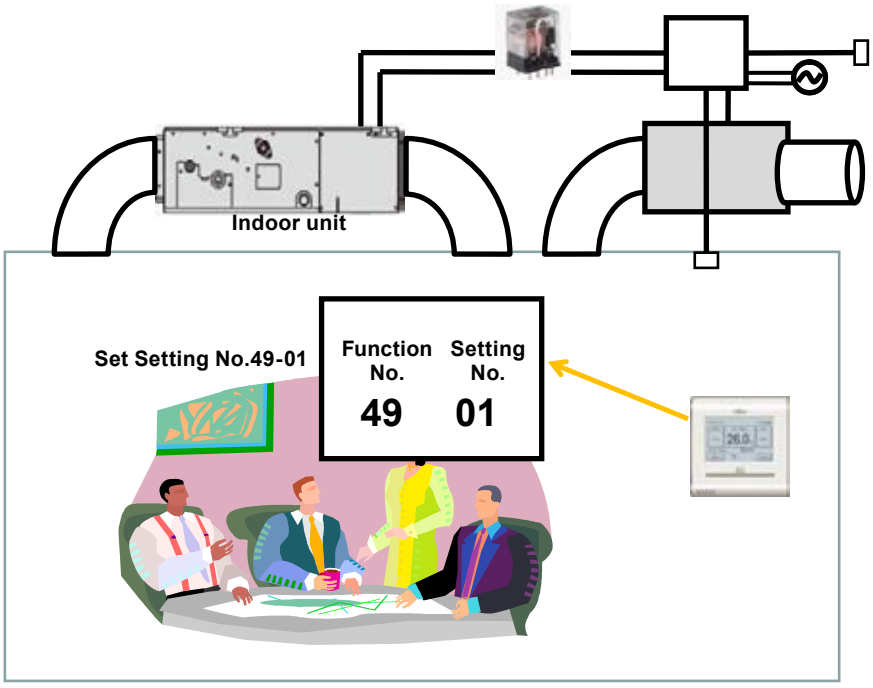

Indoor unit is continued appropriate operation until [Forced thermostat off] signal received, at condition which are set by central and individual controller or detected by thermo sensors of indoor unit. Once received [Forced thermostat off] signal received, Indoor unit stop operation.

EXTERNAL INPUT & OUTPUT

●Example of Electrical circuit

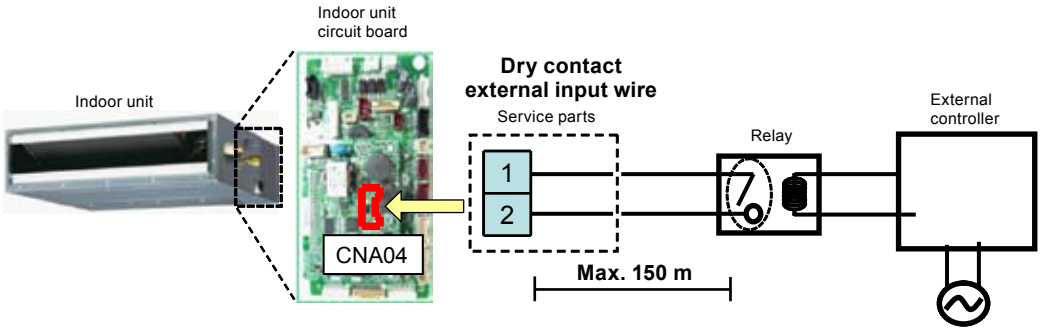

Specification of external input	
Item	Spec
Terminal	CNA04
Output voltage	DC 12V
Wire diameter	AWG22 Twist (0.33mm^2)
Service parts No.	9368778019

Requirement for relay switch	
Item	Spec
Min. permissible load	1mA or less

EXTERNAL INPUT & OUTPUT

1-2-2. EXTERNAL OUTPUT

- A twisted pair cable (22AWG) shoud be used. Maximum length of cable is 25m.
- Use an external input and output cable with appropriate external dimension, depending on the number of cables to be installed.
- Output voltage: Hi DC12V±2V, Lo 0V.
- Permissible current: 50mA

Connector		Output voltage	Status
CNB01	External output1	0V	Stop
	Pins 1-2	DC 12V	Operation
	External output2	0V	Normal
	Pins 1-3	DC 12V	Error
	External output3	0V	Indoor unit fan stop
	Pins 1-4	DC 12V	Indoor unit fan operation
	External output4	0V	Auxiliary heater OFF
	Pins 1-5	DC 12V	Auxiliary heater ON

■ OUTPUT SELECT

● When indicator etc. are connected directly

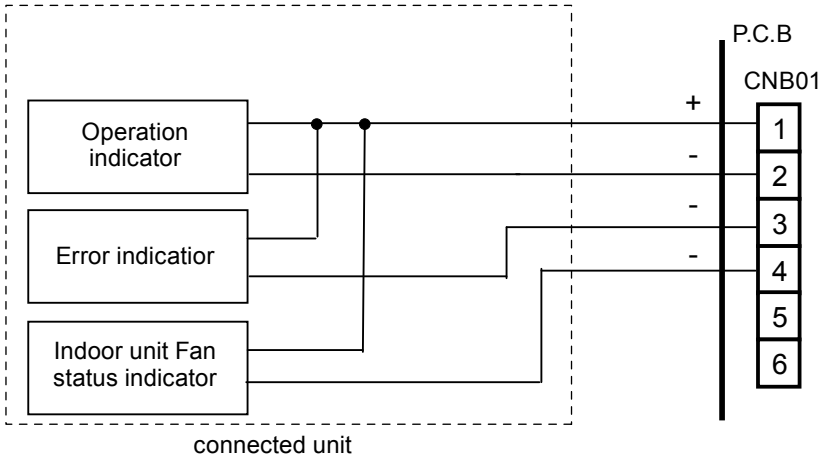

● When connecting with unit equipped with a power supply

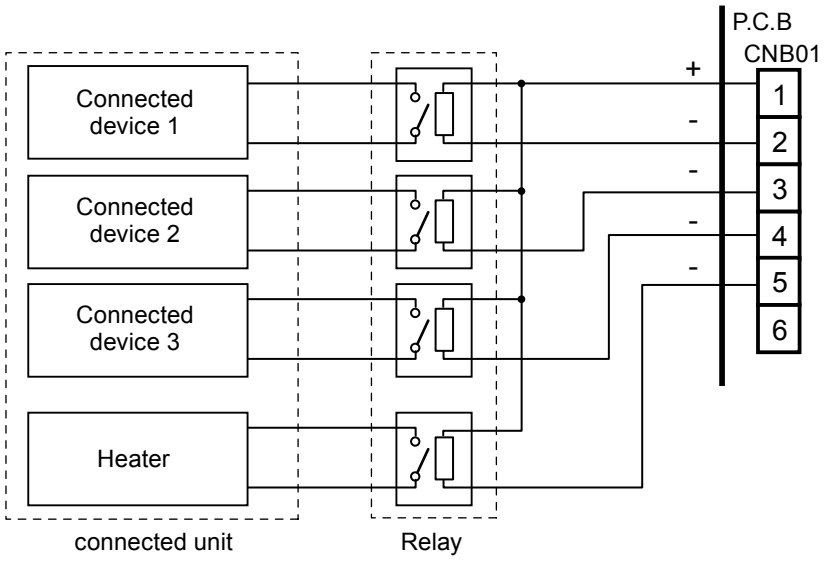

EXTERNAL INPUT & OUTPUT

■ OPERATION STATUS (External output1)

The output for CNB01 (1-2) is ON when the indoor unit is operating.

The output is off when the unit is stopped.

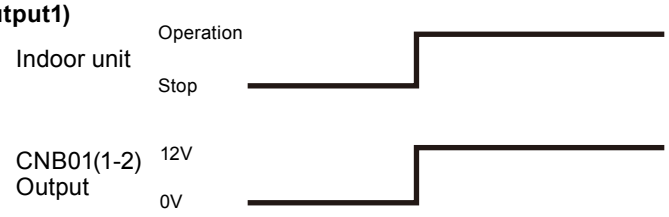

■ ERROR STATUS (External output2)

The output for CNB01 (1-3) is ON when an error is generated for the indoor unit.



■ INDOOR UNIT STATUS (External output3)

The output for CNB01 (1-4) is ON when the indoor unit fan is operating.

The output is off when the fan is stopped or during cold air prevention.

The output for CNB01 (1-4) is OFF during thermostat OFF when DRY mode operation.



Ex) Used for inter lock energize for exhaust fan.

■ AUXILIARY HEATER OUTPUT (External output4)

Corresponding indoor units: All duct type.

A signal is outputed from Connector when indoor fan and thermostat ON under heating operation.

*Signal output performance specifications are as shown on the right

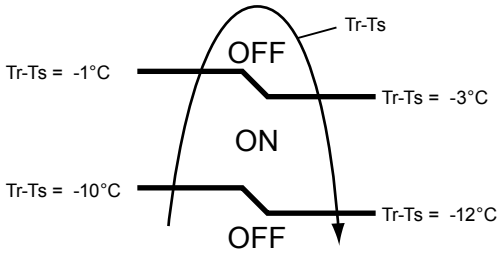

Ex. When Set Temperature(Ts) is 22°C

- ▪and Room Temperature(Tr) increase above 12°C, signal output is on.
- ▪and Room Temperature(Tr) increase above 21°C, signal output is off.
- ▪and Room Temperature(Tr) decrease below 19°C, signal output is on.
- ▪and Room Temperature(Tr) decrease below 10°C, signal output is off.

The output also turns OFF on defrost operation and oil recovery operation.

● Fan delay switch (Indoor Unit)

This is used to continue indoor unit fan operation for 1 minute after thermo OFF in heating mode.

1 minute delay control set by Dip sw2-3 on PCB is ON.

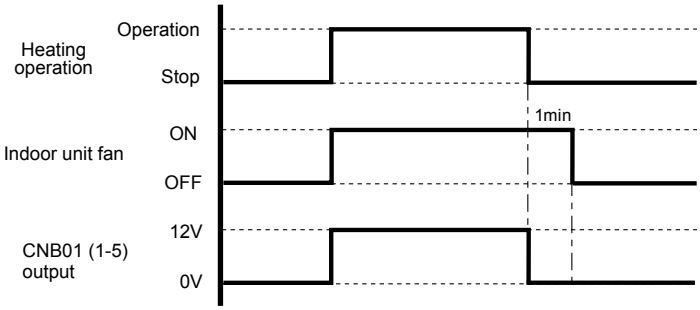

⚠CAUTION

Please install auxiliary heater between the indoor unit and the outlet side.

Please be sure to use delay control of a fan.

Please design and install auxiliary properly considering protection by auxiliary itself.

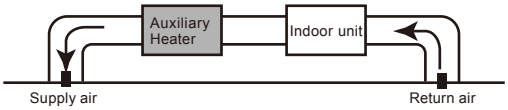

If auxiliary does not design and install properly, it may cause fire by auxiliary's heat.

In case of auxiliary does not design and install properly, our company cannot take responsibility.

EXTERNAL INPUT & OUTPUT

1-2-3. PARTS

Following cord (service parts) is required. Please use the parts number shown below to order the cord from your sales representative.

Usage	Name and shapes	Q'ty	Parts No.
For output port	EXTERNAL OUTPUT WIRE B	1	9379529013
For control input port (Apply voltage terminal)	EXTERNAL INPUT WIRE D 	1	9368779016
For control input port (Dry contact terminal)	EXTERNAL INPUT WIRE F 	1	9368779023
For forced thermostat off port (Apply voltage terminal)	EXTERNAL INPUT WIRE B 	1	9368778002
For forced thermostat off port (Dry contact terminal)	EXTERNAL INPUT WIRE E 	1	9368778019

EXTERNAL INPUT & OUTPUT

1-2-4. INDOOR UNIT EXTERNAL INPUT / OUTPUT FUNCTION SUMMARY

■ INDOOR UNIT EXTERNAL INPUT FUNCTION

Item	Dry contact/ Apply voltage	Function				Specifications				
		Operation / Stop	Emergency stop	Forced Stop	Forced thermostat off	Terminal	Signal type	External power supply		Wire size / length
								Allowable voltage	Allowable current	
Indoor unit input function specification	Dry contact DC12[V]	● (46-00)	● (46-01)	● (46-02)	-	CNA02 (PIN1-3)	Edge	-	-	AWG22 Twist / Max. Cable length 150 [m]
						CNA02 (Ch1:PIN1-3) (Ch2:PIN2-3)	Pulse *1			
		-	-	-	●	CNA04 (PIN1-2)	Edge			
	Apply voltage	● (46-00)	● (46-01)	● (46-02)	-	CNA01 (PIN1-3)	Edge	DC12-24 [V]	10 [mA] or less	
						CNA01 (Ch1:PIN1-3) (Ch2:PIN2-3)	Pulse *1			
		-	-	-	●	CNA03 (PIN1-2)	Edge			

*1 : Default setting is Edge signal, if you use pulse signal, must be set Dip SW2-2 to ON position.

■ INDOOR UNIT EXTERNAL OUTPUT FUNCTION

Item	Dry contact / Apply voltage	Function				Specifications			
		Operation status	Error status	Indoor unit fan operation status	Auxiliary heater output	Terminal	Terminal output voltage	Wire size	Maximum length of cable
Indoor unit output function specification	Dry contact	●	-	-	-	CNB01 (PIN1-2)	DC12 [V]	AWG22 Twist	25 [m]
		-	●	-	-	CNB01 (PIN1-3)			
		-	-	●	-	CNB01 (PIN1-4)			
		-	-	-	● *	CNB01 (PIN1-5)			

* : Auxilary heater is only available for duct type indoor unit.
If you use Auxiliary heater output, must be set Dip SW2-3 to ON position.

EXTERNAL INPUT & OUTPUT

1-3. RB UNIT

External input	External output	Connector
Cooling priority/ Heating priority	-	CNA01 or CNA02

1-3-1. EXTERNAL INPUT

- RB unit can be cooling priority/heating priority selection by using RB unit PCB CNA01 or CNA02.
- The "external input priority mode" must be set by changing DIP SW on PC board of RB unit.
- A twisted pair cable (22AWG) shoud be used. Maximum length of cable is 150m.
- Use an external input cable with appropriate external dimension, depending on the number of cables to be installed.
- The wire connection should be separate from the power cable line.

■ INPUT SELECT

Use either one of these types of terminal according to the application. (Both types of terminals cannot be used simultaneously.)

● Dry contact terminal ([CNA01])

When a power supply is unnecessary at the input device you want to connect, use the Dry contact terminal ([CNA01]).

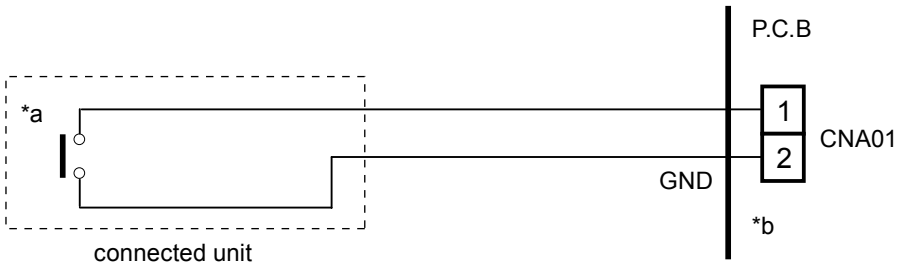

*a: Select very low current use contacts (usable at DC12V, DC1mA or less).

*b: The wiring is different from Apply voltage terminals. Be sufficiently careful when wiring.

EXTERNAL INPUT & OUTPUT

When connected to Dry contact terminals of multiple RB units with a connected unit, insulate each RB unit with relay, etc. as shown on below example.

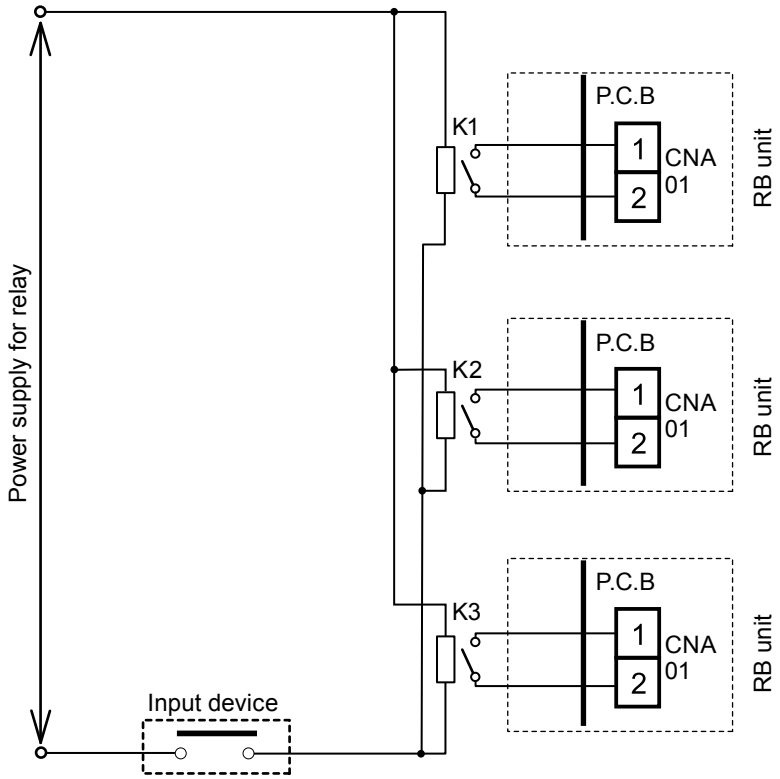

K1 - K3 : Relay
(Device for DC Current)

NOTE :

● When connected to multiple RB units directly, it will cause breakdown.

EXTERNAL INPUT & OUTPUT

● Apply voltage terminal ([CNA02])

When a power supply must be provided at the input device you want to connect, use the Apply voltage terminal ([CNA02])

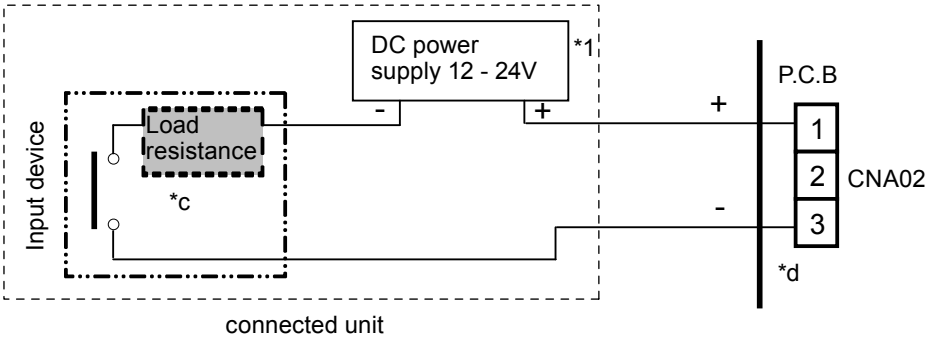

*1: Make the power supply DC12 to 24V. Select a power supply capacity with an ample surplus for the connected load.
Do not impress a voltage exceeding 24V across pins 1-3.

*c: The allowable current is DC 5mA to 10mA. (Recommended: DC5mA)
Provide a load resistance such that the current becomes DC10mA or less.
Select very low current use contacts (usable at DC12V, DC1mA or less).

*d: The polarity is [+] for pin 1 and [-] for pin 3. Connect correctly.

When connected to Apply voltage terminals of multiple RB units with a connected unit, be sure to make a branch outside the RB unit using a pull box, etc. as shown on below example.

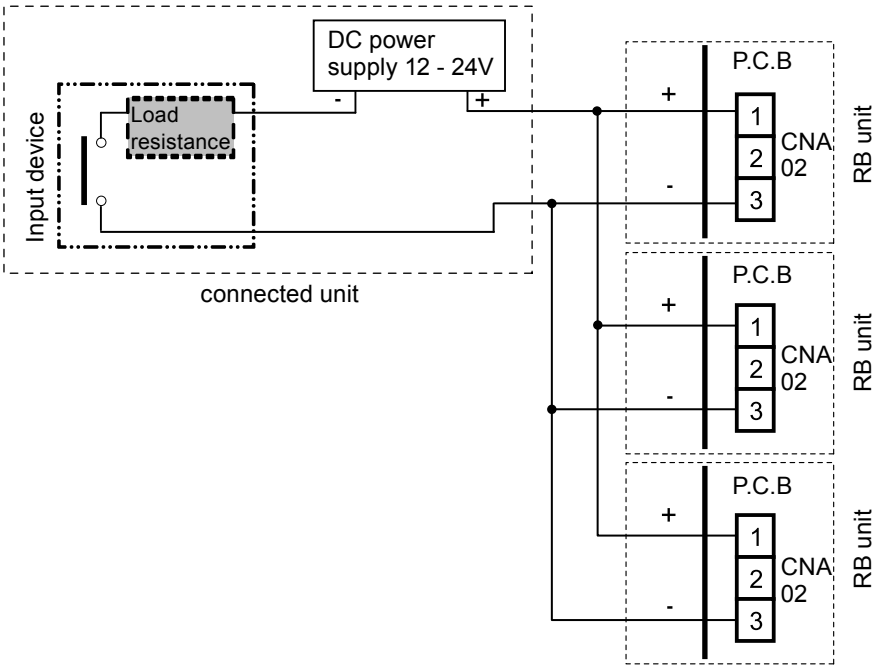

EXTERNAL INPUT & OUTPUT

■ COOLING/HEATING PRIORITY FUNCTION

●"Edge" input only

Connector	Input signal	Command
CNA01 or CNA02	OFF → ON	Heating priority
	ON → OFF	Cooling priority

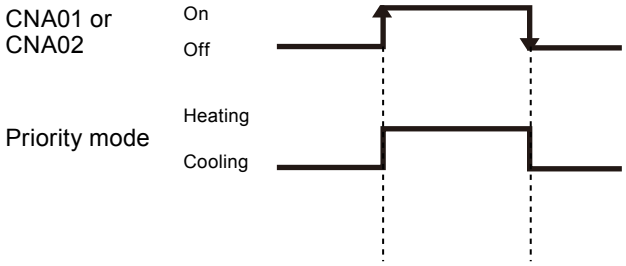

1-3-2. PARTS

Following cord (service parts) is required. Please use the parts number shown below to order the cord from your sales representative.

Usage	Name and shapes	Q'ty	Parts No.
For control input port (Dry contact terminal)	EXTERNAL INPUT WIRE A 	1	9368777005
For control input port (Apply voltage terminal)	EXTERNAL INPUT WIRE D 	1	9368779016

EXTERNAL INPUT & OUTPUT

1-4. TOUCH PANEL CONTROLLER

External input	External output	Connector
Control input	-	TM201 (CN411 or CN412)
-	Operation status	CN410
-	Error status	

1-4-1. EXTERNAL INPUT

- This function performs “Emergency stop” or “All On / All Off” by using the signal to be input externally at external input terminals.

■ INPUT SELECT

Use either one of these types of terminal according to the application. (Both types of terminals cannot be used simultaneously.)

Please see more detail of selection setting by operation manual of Touch Panel Controller.

It is possible to switch to the Dry contact terminal or the Apply voltage terminal by connecting the CN201 on the TM201 printed circuit board to the CN411 or the CN412 on the printed circuit board of the panel side.

* The Dry contact terminal (connected to the CN411) is set when shipped from the factory.

TM201 - K1, K2	Connect with the CN201
Dry contact terminal	CN411
Apply voltage terminal	CN412

● Dry contact terminal TM201 (CN411)

When a power supply is unnecessary at the input device you want to connect, use the Dry contact terminal TM201 (CN411).

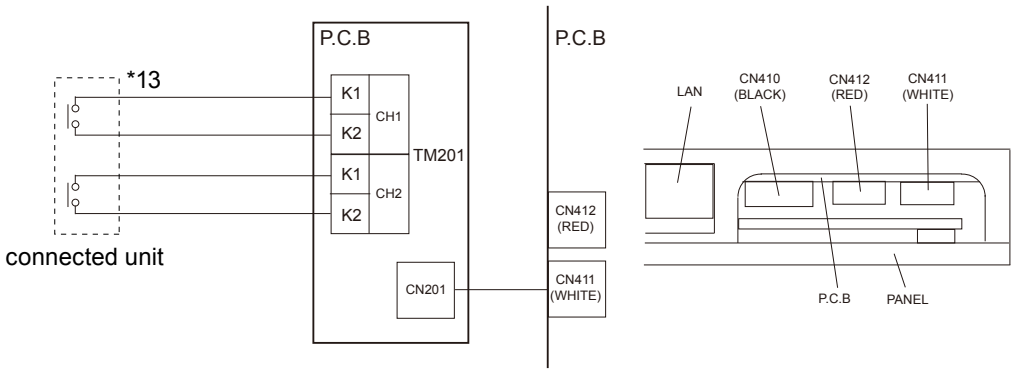

*13 : Short circuit detection resistance (R_{ON}) : ≤ 500 (ohm).
Open circuit detection resistance (R_{OFF}) : ≥ 100 (kilo-ohm).
A twisted pair cable(22AWG) shoud be used. Maximum length of cable is 25m.

EXTERNAL INPUT & OUTPUT

● Apply voltage terminal TM201 (CN412)

When a power supply must be provided at the input device you want to connect, use the Apply voltage terminal TM201 (CN412).

*A twisted pair cable(22AWG) shoud be used. Maximum length of cable is 25m.

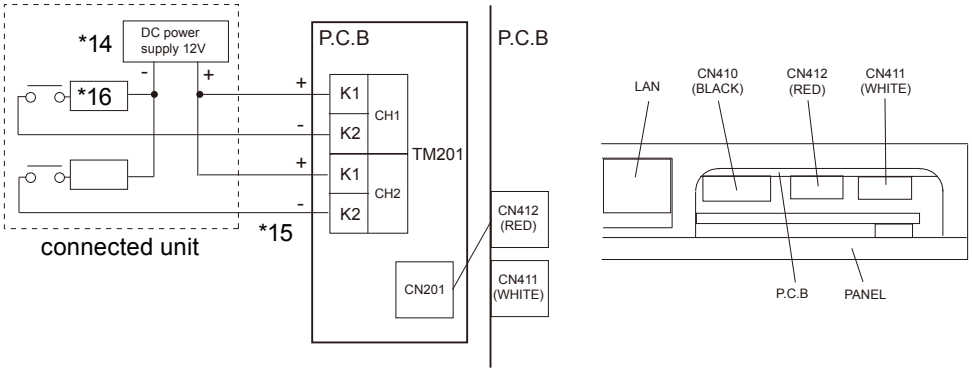

*14 : Make the power supply DC12V.
*15 : Do not impress a voltage exceeding 12V across pins K1, and K2.
*16 : The allowable current is 10mA or less (Recommended : DC5mA).

■ INPUT SIGNAL TYPE

The input signal type can be selected.



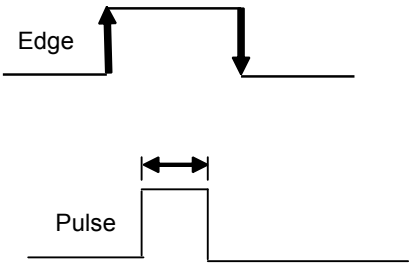

EXTERNAL INPUT & OUTPUT

■ CONTROL INPUT FUNCTION

●In the case of "Edge" input

Connector	Input signal	Command
Ch1 of TM201	OFF → ON	All on / Emergency stop
	ON → OFF	All off / Normal

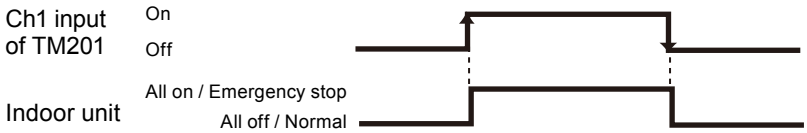

●In the case of "Pulse" input

Connector		Input signal	Command
TM201	Ch1	OFF → ON	All on / Emergency stop
	Ch2	OFF → ON	All off / Normal

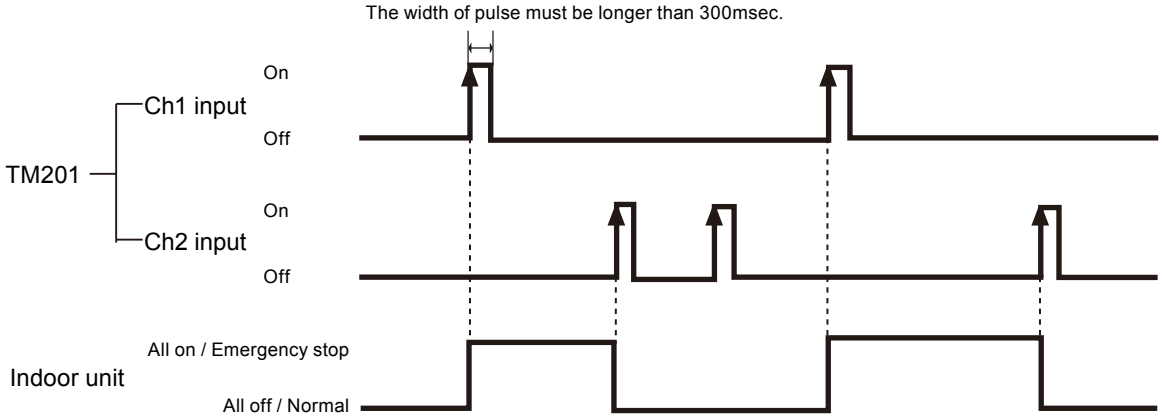

EXTERNAL INPUT & OUTPUT

1-4-2. EXTERNAL OUTPUT

Connector		Output voltage	Status
CN410 (Black)	Ch1	0V	All of indoor units "Stop"
	Pins1-2	DC12V *17	At least one more indoor units "Operation"
	Ch2	0V	Normal
	Pins3-4	DC12V *17	Error

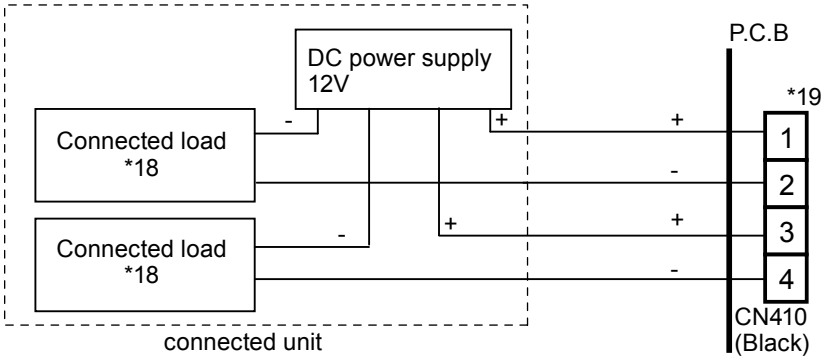

*17: Provide a DC12V power supply. Select a power supply capacity with an ample surplus for the connected load.
Do not impress a voltage exceeding 12V across pins 1-2, and 3-4

*18: The allowable current is DC15mA or less. Provide a load resistance such that the current becomes DC15mA or less.

*19: Polarity is [+] for pins 1,3 and [-] for pins 2,4.

■ OPERATION STATUS (External output1)

The output for CN410(1-2) is ON when at least one more indoor units is operating.

The output is OFF when all of indoor units is stopped.



■ ERROR STATUS (External output2)

The output for CN410(3-4) is ON when Error of at least one more indoor unit or outdoor unit or Touch panel controller is generated.



1-4-3. PARTS

Following cord (service parts) is required. Please use the parts number shown below to order the cord from your sales representative.

Name and shapes	Q'ty	Parts No.
External output wire 	1	9379529006

EXTERNAL INPUT & OUTPUT

1-5. CENTRAL REMOTE CONTROLLER

External input	External output	Connector
Control input	-	CN6 (and CN7) or CN11 (and CN12)
-	Operation status	CN9
-	Error status	

1-5-1. EXTERNAL INPUT

- This function performs “Emergency stop” or “All On / All Off” by using the signal to be input externally at external input terminals.

■ INPUT SELECT

There are 2 kinds of input method of External input terminal: “Dry contact” or “Apply voltage contact”.

● Dry contact

When a power supply is unnecessary at the input device you want to connect, connect to CN6 and CN7.

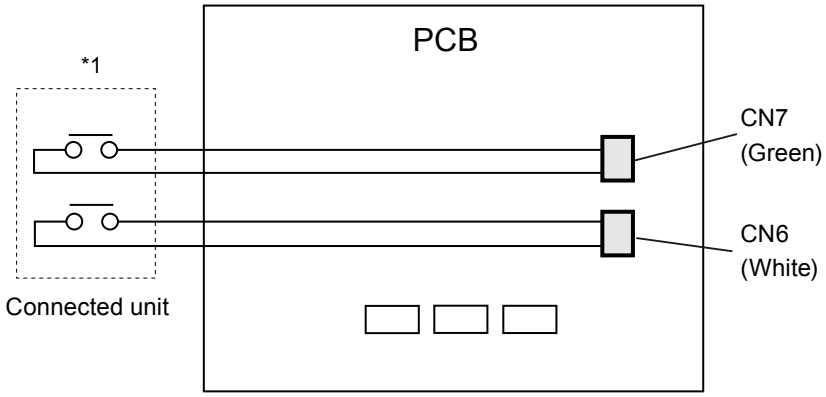

*1 : Short circuit detection resistance (R_{ON}) : ≤ 500 (ohm).
Open circuit detection resistance (R_{OFF}) : ≥ 100 (kilo-ohm).

* A twisted pair cable(22AWG) shoud be used. Maximum length of cable is 25m.

EXTERNAL INPUT & OUTPUT

● Apply voltage contact

When a power supply must be provided at the input device, connect to CN11 and CN12.

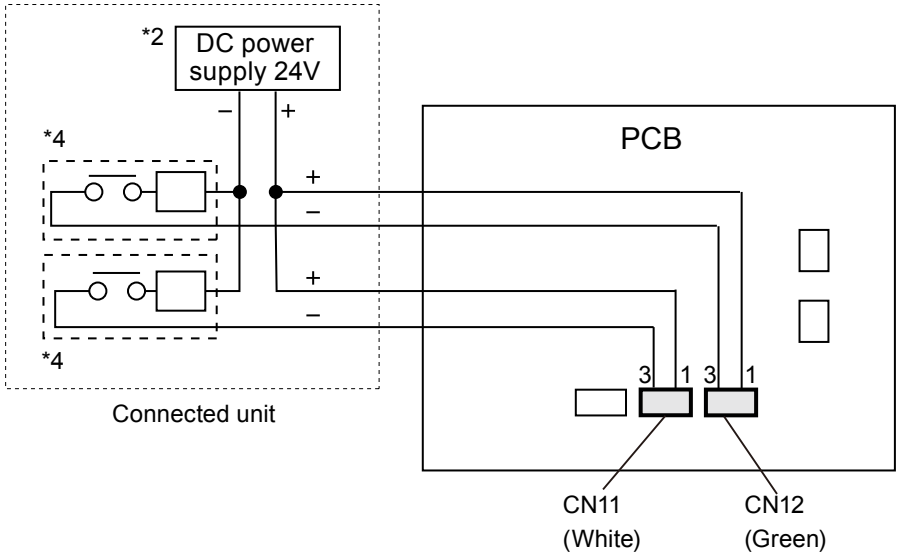

*2 : Make the power supply 24V. Select a power supply capacity with an ample surplus for the connected load.
*3 : Do not impress a voltage exceeding 24V across pin 1, 3.
*4 : The allowable current is DC5mA or less. (Recommended DC5mA)
Provide a load resistance such that the current becomes DC5mA or less.

* A twisted pair cable(22AWG) shoud be used. Maximum length of cable is 25m.

■ INPUT SIGNAL TYPE

The input signal type can be selected.

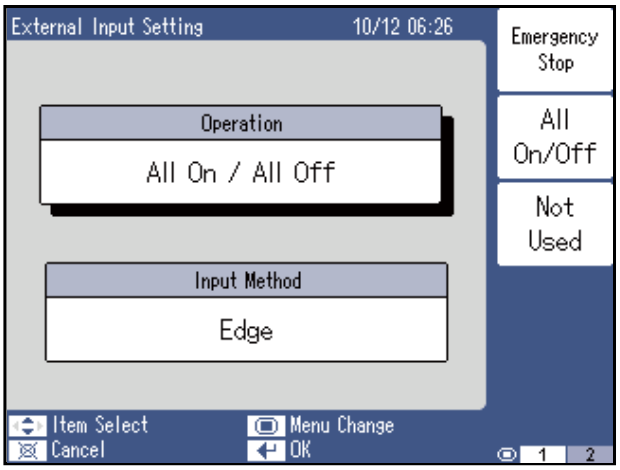

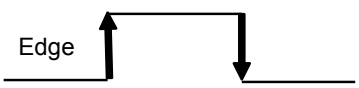

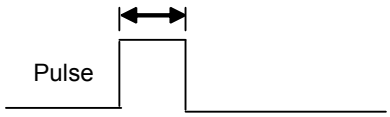

- Press the [ ] button and move the cursor to the “Operation” menu.
  [Emergency Stop] button : Enables Emergency stop by external input.
  [All On/All Off] button : Enables batch operation On/Off by external input.
  [Not Used] button : Does not receive external input signals.
- Press the [ ] button and move the cursor to the “Input Method” menu.
  [Edge] button : Detects the signal rise and fall.
  [Pulse] button : Detects the signal level.
- When the [ ] button is pressed, setting is complete.

EXTERNAL INPUT & OUTPUT

■ CONTROL INPUT FUNCTION

●In the case of "Edge" input

Connector	Input signal	Command
CN6 or CN11	OFF → ON	All on / Emergency stop
	ON → OFF	All off / Normal

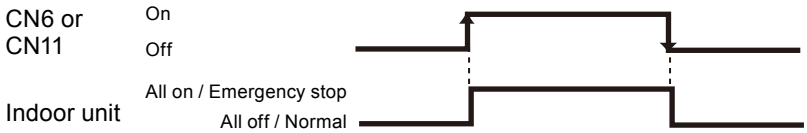

●In the case of "Pulse" input

Connector	Input signal	Command
CN6 or CN11	OFF → ON	All on / Emergency stop
CN7 or CN12	OFF → ON	All off / Normal

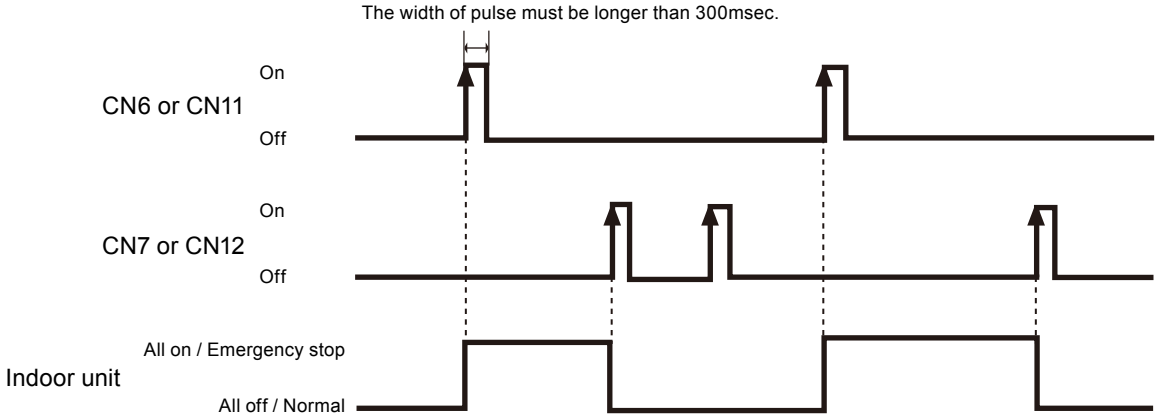

EXTERNAL INPUT & OUTPUT

1-5-2. EXTERNAL OUTPUT

Connector		Output voltage	Status
CN9 (Black)	Ch1	0V	All of indoor units "Stop"
	Pins3-4	DC12V *5	At least one more indoor units "Operation"
	Ch2	0V	Normal
	Pins1-2	DC12V *5	Error

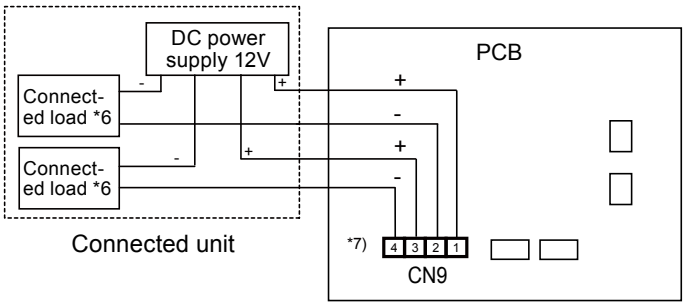

*5: Provide a DC12V power supply. Select a power supply capacity with an ample surplus for the connected load.
Do not impress a voltage exceeding 12V across pins 1-2, and 3-4

*6: The allowable current is DC15mA or less. Provide a load resistance such that the current becomes DC15mA or less.

*7: Polarity is [+] for pins 1,3 and [-] for pins 2,4.

■ OPERATION STATUS (External output1)

The output for CN9 (3-4) is ON when at least one more indoor units is operating.

The output is OFF when all of indoor units is stopped.



■ ERROR STATUS (External output2)

The output for CN9 (1-2) is ON when Error of at least one more indoor unit or outdoor unit or Central remote controller is generated.



1-5-3. PARTS

Following cord (service parts) is required. Please use the parts number shown below to order the cord from your sales representative.

Usage	Name and shapes	Q'ty	Parts No.
For control input port (Dry contact terminal)	External input wire 	2	9368778002
For control input port (Apply voltage terminal)	External input wire 	2	9368779009
For output port	External output wire 	1	9379529006

EXTERNAL INPUT & OUTPUT

1-5-4. CONTROLLER EXTERNAL INPUT / OUTPUT FUNCTION SUMMARY

■ CONTROLLER EXTERNAL INPUT FUNCTION

Central controller (Input function)	Dry contact / Apply voltage	Function		Specifications				
		Emergency stop	All on / All off	Terminal	Signal type	External power supply		Wire size / length
						Allowable voltage	Allowable current	
Touch Panel Controller	Dry contact	● (Screen icon)	● (Screen icon)	TM201 (CH1-K1,K2) [CN201 ↔ CN411]	Edge	-	-	AWG22 Twist / 25 [m]
				TM201 (CH1-K1,K2) (CH2-K1,K2) [CN201 ↔ CN411]	Pulse *1			
	Apply voltage	● (Screen icon)	● (Screen icon)	TM201 (CH1-K1,K2) [CN201 ↔ CN412]	Edge	DC12 [V]	10mA or less	
				TM201 (CH1-K1,K2) (CH2-K1,K2) [CN201 ↔ CN412]	Pulse *1			
Central Remote Controller	Dry contact	● (Screen icon)	● (Screen icon)	CN6 (PIN1-2)	Edge	-	-	
				CN6 (Ch1:PIN1-2) CN7 (Ch2:PIN1-2)	Pulse *1			
	Apply voltage	● (Screen icon)	● (Screen icon)	CN11 (PIN1-3)	Edge	DC24 [V]	5mA or less	
				CN11 (Ch1:PIN1-3) CN12 (Ch2:PIN1-3)	Pulse *1			

*1 : Default setting is Edge signal, if you use pulse signal, must be set pulse signal from screen icon.

■ CONTROLLER EXTERNAL OUTPUT FUNCTION

Central Controller (Output Function)	Dry contact / Apply voltage	Function		Specifications			
		Operation status	Error status	Terminal	External power supply		Wire size/ length
					Allowable voltage	Allowable current	
Touch Panel Controller	Apply voltage	●	-	CN410 (PIN1-2)	DC12 [V]	15mA or less	AWG22 Twist / Max. 25 [m]
		-	●	CN410 (PIN3-4)			
Central Remote Controller	Apply voltage	●	-	CN9 (PIN3-4)			
		-	●	CN9 (PIN1-2)			

EXTERNAL INPUT & OUTPUT

Refrigerant R410A INVERTER

AIRSTAGE™
Variable Refrigerant Flow System

9. NOTES

CONTENTS

9. NOTES

1. REFRIGERANT LEAKAGE CAUTION ..... 09 - 01
   1-1. INTRODUCTION ..... 09 - 01
   1-2. CHECKING CONCENTRATION LIMIT ..... 09 - 02

2. INSTALLATION PRECAUTIONS ..... 09 - 04
   2-1. INDOOR UNIT INSTALLATION PRECAUTIONS ..... 09 - 04
   2-2. OUTDOOR UNIT INSTALLATION PRECAUTIONS ..... 09 - 07

3. COMPATIBILITY OF VRF SYSTEM ..... 09 - 08

4. ABOUT CONNECTION BETWEEN SERIES ..... 09 - 11
   4-1. PIPING CONNECTION ..... 09 - 11
   4-2. WIRING CONNECTION ..... 09 - 12

1. REFRIGERANT LEAKAGE CAUTION

The installer and system specialist shall secure safety against leakage according to local regulations or standards. The following standards may be applicable if local regulations are not available.

1-1. INTRODUCTION

This air conditioners use R410A as refrigerant. Though R410A is harmless and incombustible in itself, the room in which the air conditioner is installed should be large enough that the refrigerant gas will not exceed the concentration limit even if the refrigerant gas leaks.

● Concentration limit

Concentration limit is the limit of Freon gas concentration where immediate measures can be taken without hurting the human body when refrigerant leaks in to the air.

The concentration limit shall be described in units of Kg/m^3 (Freon gas weight in per m^3 air) to facilite calculation.

Concentration limit : $0.44kg/m^3$

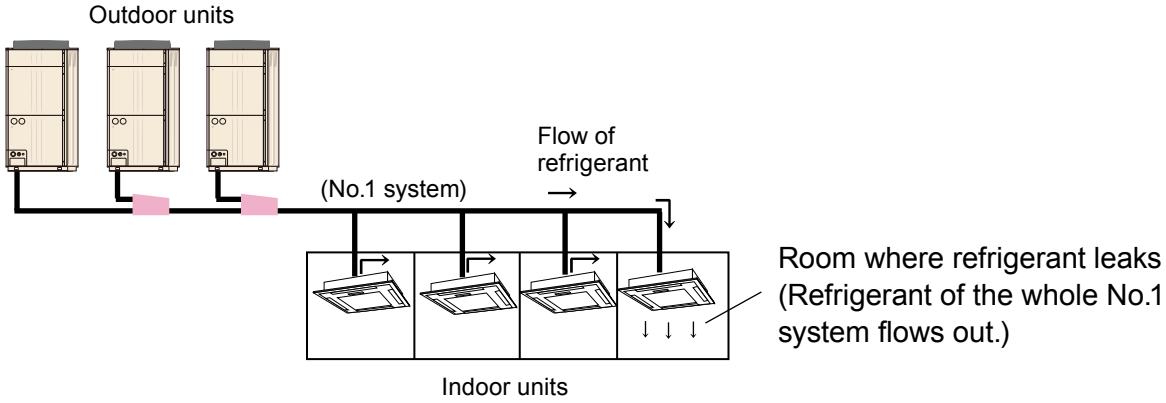

NOTES

NOTES

1-2. CHECKING CONCENTRATION LIMIT

Check concentration limit following steps ①②, and take appropriate measures depending on the situation.

① Calculate amount of all replenished refrigerant (kg) per refrigerant system.

Amount of replenished refrigerant per refrigerant system	+	Amount of additional replenished refrigerant	=	Total amount of replenished refrigerant in refrigerant system (kg)

Amount of replenished refrigerant at factory shipment

Amount of additionally replenished refrigerant depending on piping length , piping diameter and indoorunit model at customer.

Note : When one refrigerant system is divided into 2 or more refrigerant systems and each system is independent, total amount of replenished refrigerant of each system shall be adopted.

② Smallest room volume.

Calculate room volume by regarding ▭ portion as one room or the smallest room.

(a) Without partition

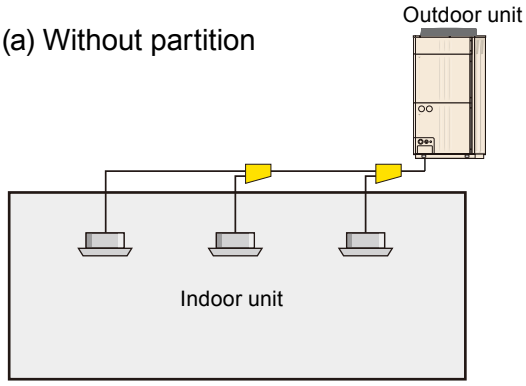

(b) When there are partitions, but there is an effective opening for ventilation between the rooms.

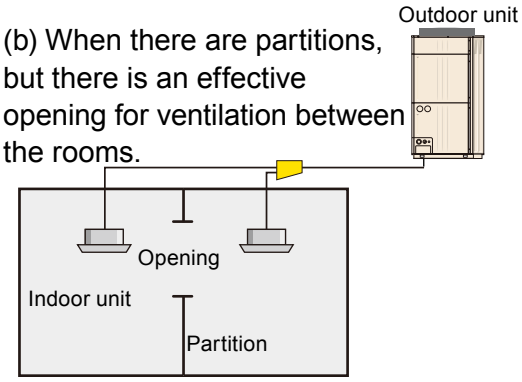

(c) With partition and without opening which serve as passage of air to adjoining room.

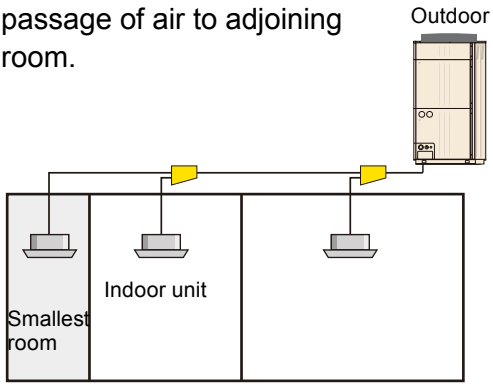

(d) When a mechanical ventilation device linked to a gas leak detection warning device is mounted in the smallest room. The room with the second smallest area is the target.

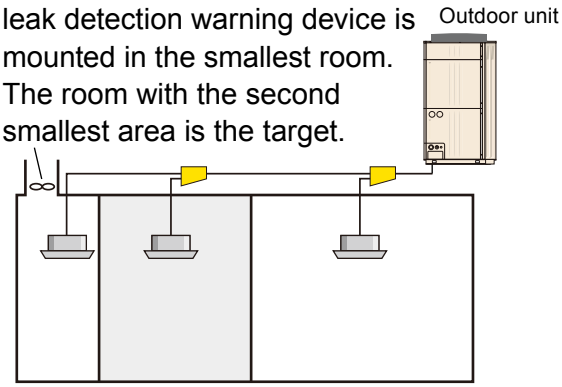

③ Calculate refrigerant concentration from the results of ① and ②

$$\frac{\text{Total amount of replenished refrigerant in refrigerant facility (kg)}}{\text{Capacity of smallest room where indoor unit is installed (m}^3\text{)}} \leq \text{Refrigerant concentration (kg/m}^3\text{)}$$

(R410A)

When the result of calculation exceeds the limiting concentration,perform the same calculations by shifting to the second smallest,and the third smallest rooms until the final result is below the limiting concentration.

NOTES

NOTES

When concentration limit is exceeded

When the concentration limit is exceeded,change the original plan or take one of the countermeasures shown below.

● Countermeasure 1

Provide opening for ventilation.

Provide 0.15% or more opening to floor space both above and below or provide opening without door.

● Countermeasure 2

Reduce the total refrigerant charging amount of the refrigerant equipment

(1) Shorten the length of the refrigerant pipes

Move the location of the outdoor unit closer to the indoor unit, and reduce the total refrigerant charging amount by shortening the length of the refrigerant pipes.

(2) Lower the capacity of the outdoor unit.

Separate the outdoor unit into multiple units to lower the outdoor unit capacity for each refrigerant system and reduce the refrigerant charging amount.

For example, by changing a 20HP × 1 unit system to a 10HP × 2 units system, the refrigerant amount for each refrigerant system can be reduced by about half.

● Countermeasure 3

Provide gas leak alarm linked with mechanical ventilator.

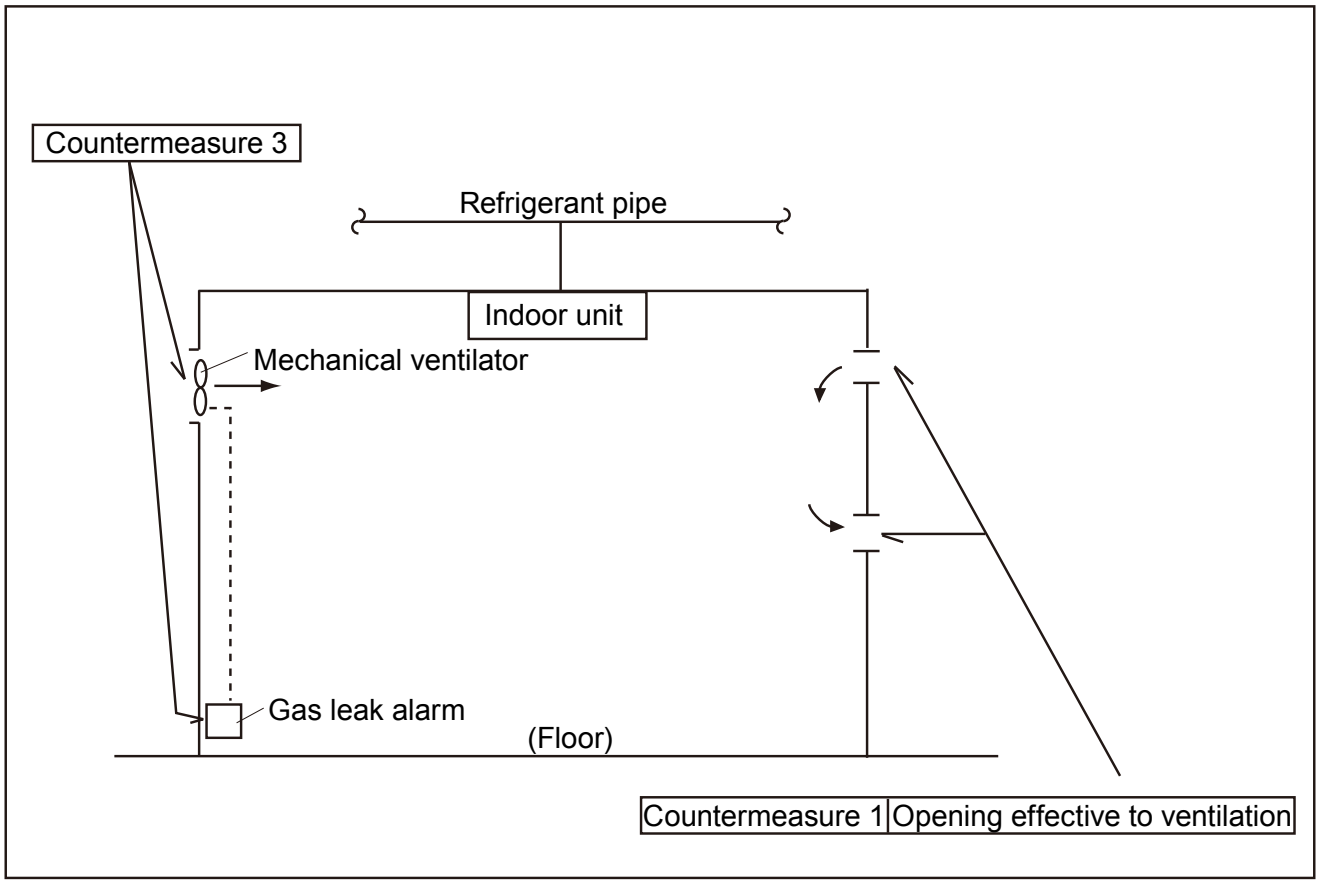

Pay special attention to the place, such as a basement, etc. When refrigerant can accummalate, since refrigerant is heavier than air.

NOTES

NOTES

2. INSTALLATION PRECAUTIONS

2-1. INDOOR UNIT INSTALLATION PRECAUTIONS

Note: The information listed below are general precautions. Some models also include items that do not apply.

■ PLACES WHERE USE PROHIBITED

- Places where there is the danger of combustible gas leakage.
- Places where sulfur gas, chlorine gas, acid, alkali, or other matter which effects equipment is generated
- Places where there is a lot of oil splash and steam (kitchen, machinery room, etc.)
- Places where machinery which generates high frequencies is used
- Ocean beaches and other areas where there is a lot of salt
- Places where carbon fibers and metal powder, powder, etc. suspended in the air
- Installation in vehicles, ships, and other conveyances
- Factory, etc. where voltage fluctuations are large

■ POINTS TO REMEMBER WHEN INSTALLING

1) The set shall be installed at a place which can withstand the weight and vibration of the indoor unit

2) To allow maintenance after refrigerant piping, drain piping, and electric wiring connection and installation, provide an installation service space and an inspection port, as required.

*Installation service space is shown on " DIMENSIONS ".

3) Be careful when installing the set at the following places.

[Installation precautions]

	Contents	Countermeasures (Reference)
When the ceiling is high	If the indoor unit is installed where the installation height given in the installation manual is exceeded, the temperature difference between the floor and ceiling of the room will be large and the heating effect will be poor. Moreover, even if the indoor unit is installed within the installation height, a similar phenomena will occur when installed in a room in which the doors are opened and closed frequently and hot air circulation is obstructed by desks, chairs, etc.	1) Switch the setting to the high ceiling mode. 2) Install a circulator. 3) Arrange the furniture in the room so that it does not obstruct the hot air.
When lower level directly contacts the outside air.	When the lower level of the shop and office is a warehouse, parking lot, etc., the surface temperature of the flooring will become low and the radiation of cold from the floor will increase. In this case, your feet will feel cold even if the room temperature is suitable.	
When the air flow distribution is poor	When an indoor unit is installed in a position where the outlet air flow will directly contact people, a draft may be felt. In addition, when there are obstructions in the path of the intake and outlet air flow, the air distribution may become extremely bad.	1) Adjust the louver fins or take other measures matched to the site. 2) Change the indoor unit outlet.

NOTES

NOTES

[Installation precautions]

	Contents	Countermeasures (Reference)
When inside the ceiling is high temperature and high humidity	When the indoor unit is installed where the inside of the ceiling is 30°C (86°F) RH80% or greater, the dew point temperature of the outer perimeter may become higher than the cabinet surface temperature and moisture will condense on the surface of the cabinet and water drops may fall inside the room. →Refer to Fig.A In addition, the humidity may vary considerably the same as when the inside of the ceiling is close to hermetically sealed and used as the outside air intake path.	1) Add heat insulating material to the outside of the indoor unit cabinet. *Regarding the cassette type, use of the “high humidity correspondence kit (option)” is recommended. 2) Strengthen the heat insulating material of the refrigerant piping and drain piping also →Refer to Fig.B 3) When the humidity inside the ceiling changes considerably, install a ventilation port

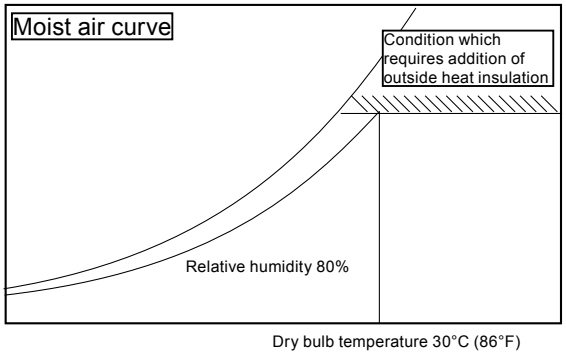

Fig.A

Work method when reinforcing the heat insulation of on-site piping

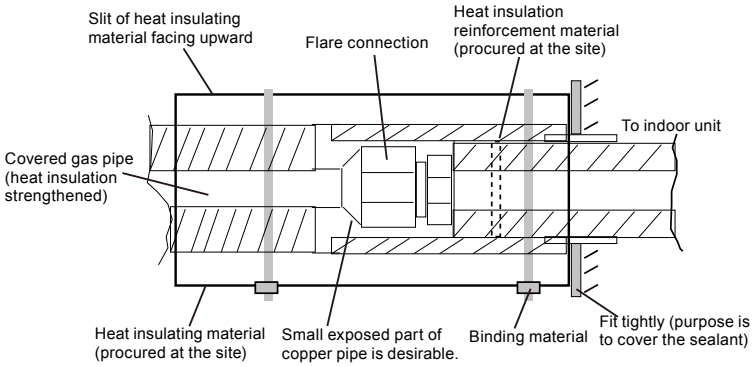

Fig.B

	Contents	Countermeasures (Reference)
When using an external duct	When using an external duct to take in new fresh air, etc., condensation may form on the surface of the duct due to the effect of the outside air temperature and the humidity inside the ceiling.	1) Always perform heat insulation processing. (Heat insulating material: Glass wool 25mm (31/32in) thick or more.)
When the remote controller installation site is bad	If the cold or warm air blown out from the air conditioner directly contacts the thermostat section of the remote controller, the outlet temperature of the air conditioner may be sensed and room temperature control will be different from the room temperature and “not cooled” or “not heated” or other trouble may occur. In addition, there is the possbility that the same kind of trouble may also occur when the remote controller is effected by direct sunlight.	1) Install the remote controller where it will not be directly exposed to the cold or hot air. 2) Install the remote controller where it will not be directly exposed to sunlight or strong lighting

NOTES

NOTES

[Installation precautions]

	Contents	Countermeasures (Reference)
When installation environment is quiet	When the wall mounting type was installed in a bedroom, living room, or other quiet place, the sound of the refrigerant flow may be sensed as noise and must be taken into accunt.	1) Plan installation of a model with external expansion valve. 2) Plan installation of a branch box farther from indoor unit. 3) Plan installation using another air conditioner.
When installing duct type in ceiling chamber system	In the case of the ceiling chamber system (duct is not installed at indoor unit inlet side and room air is sucked into the indoor unit through the inside of the ceiling), the thermistor inside the indoor unit may not correctly detect the room temperature. Heating operation: Room is not heated because the indoor unit is easily turned off by the thermostat. Cooling operation: Room is too cold because the indoor unit is difficult to turn off by the thermostat.	1) Replace the indoor unit thermistor with a Remote sensor unit (optional parts) and install the sensor where the room temperature can be correctly detected
When the outlet air is sucked in at duct type	Cooling operation does not cool the room and heating operation does not heat the room because the short circuited indoor unit is not turned on by the thermostat.	1) Reconsider the ventilation port construction 2) Replace the indoor unit thermistor with a Remote sensor unit (optional parts) and install the sensor where the room temperature can be correctly detected.
When using the wireless remote controller	Signals may not be received when using it in a room illuminated by an inverter fluorescent lamp.	1) Turn on the fluorescent lamp and check if the indoor unitreceives the signals from the remote controller. If the indoor unit does notreceive the signals, consult an authorized service personnel.
When installing the inverter type	It may generate noise in TV sets, stereos and PCs.	1) The inverter type should be installed at a sufficient distance from these equipments.

NOTES

NOTES

2-2. OUTDOOR UNIT INSTALLATION PRECAUTIONS

Note: The information listed below are general precautions. Some models also include items that do not apply.

■ PLACES WHERE USE PROHIBITED

- Places where there is the danger of combustible gas leakage
- Places where sulfur gas, chlorine gas, acid, alkali, or other matter which effects equipment is generated
- Places not affected by heat radiation from other heat sources
- Places where the air is not stagnant
- Places where machinery which generates high frequencies is used
- Ocean beaches and other areas where there is a lot of salt
- Installation in vehicles, ships, and other conveyances
- Factory, etc. where voltage fluctuations are large

■ POINTS TO REMEMBER WHEN INSTALLING

1) The set shall be installed at a place which can withstand the weight and vibration of the outdoor unit

2) To allow maintenance after refrigerant piping, drain piping, and electric wiring connection and installation, provide an installation service space.

*Installation service space is shown on "3-3.INSTALLATION SPACE"

3) Be careful when installing the set at the following places.

[Installation precautions]

	Contents	Countermeasures (Reference)
When installed near adjacent houses	Perform installation work so that operating sound does not disturb the neighbors.	1) Install a soundproof barrier 2) Change the installation site
When there is the possibility of strong wind	1) If the outdoor unit is exposed to strong wind, capacity may drop, frost may form during heating, and operation may be stopped by high pressure rise. In addition, when a very strong wind blows, the fan may be damaged. 2) When a very strong wind blows, there is the possibility of the outdoor unit being toppled over if held only by foundation bolts	1) Install with the outlet side keep a sufficient distance away from a facing wall or fence. 2) Make the outlet direction and wind direction perpendicular. 3) Fasten the outdoor unit using toppling prevention hardware (procured at the site).
When snow accumulates	If the outdoor unit is covered by accumulated snow, it may not be able to operate.	1) Make the foundation as high as possible. 2) Perform snow prevention work.
When installing the inverter type	It may generate noise in TV sets, stereos and PCs.	1) The inverter type should beinstalled at a sufficient distance from these equipments.

NOTES

NOTES

3. COMPATIBILITY OF VRF SYSTEM

■ COMPATIBILITY OF OUTDOOR UNIT AND INDOOR UNIT

● OUTDOOR UNIT AND INDOOR UNIT

Compatibility of outdoor unit and indoor unit in refrigerant system as follows.

			Indoor unit	
			VR- II series	V- II series *1 J- II series *1
Outdoor unit	VR- II series	Heat Recovery	○ OK	× Prohibited
	V- II series	Heat Pump Cooling Only	○ OK	○ OK
	J- II series	Heat Pump Cooling Only	○ *2 OK	○ *2 OK

*1: V-II series and J-II series Indoor unit model name is
"A*****LA*H" or "A*****LB*H" (*: arbitrary character)

*2 : Following indoor units cannot be connected. (ARXC60 / 72 / 90)

● Example cases for compatibility

	Outdoor unit	Indoor unit	Judgement
Case 1	 VR- II series	 ARXA24GBLH (VR- II series)	○ OK
Case 2		 ARXA24LATH (V- II series or J- II series)	× Prohibited
Case 3	 V- II series	 ARXA24GBLH (VR- II series)	○ OK
Case 4		 ARXA24LATH (V- II series or J- II series)	○ OK
Case 5	 J- II series	 ARXA24GBLH (VR- II series)	○ OK
Case 6		 ARXA24LATH (V- II series or J- II series)	○ OK

NOTES

NOTES

■ COMPATIBILITY OF CONTROLLER SYSTEM

				Model	VR- II series	V- II series J- II series
Controller	Central Controller	System Controller		UTY-APGX	○ *1 OK	○ *1 OK
		Touch Panel Controller		UTY-DTG∗	○ OK	○ OK
		Central Remote Controller		UTY-DCG∗	○ OK	○ OK
		Group Remote Controller		UTY-CGG∗	○ OK	○ OK
	Individual Controller	Wired Remote Controller (Touch panel)		UTY-RNR∗	○ OK	○ *2 OK
		Wired Remote Controller		UTY-RNK∗	○ OK	○ OK
		Simple Remote Controller (with master control)		UTY-RSK∗	○ OK	○ OK
		Simple Remote Controller (without master control)		UTY-RHK∗	○ OK	○ OK
		Wireless Remote Controller		UTY-LNH∗	○ OK	○ OK

*1: Different VRF series may be connected for each of the 4 VRF networks supported by the unit.

*2: It is not connectable with indoor unit ("A*****LA*H" or "A*****LB*H" (*: arbitrary character)) of the old type.

NOTES

NOTES

			Model	VR- II series	V- II series J- II series
Adaptor / Convertor	External Switch Controller		UTY-TEKX	○ OK	○ OK
	IR Receiver unit (for all Duct type)		UTB-∗WB UTB-∗WC	○ OK	○ OK
	IR Receiver unit (for Cassette type)		UTY-LRH∗B1	○ OK	○ OK
	Signal amplifier		UTY-VSGXZ1	○ OK	○ OK
	Signal amplifier		UTY-VSGX	○ *1 OK	○ *1 OK
	Network Convertor		UTY-VGGXZ1	○ OK	○ OK
	Network Convertor		UTY-VGGX	○ OK	○ OK
	Network Convertor for LonWorks®		UTY-VLGX	○ OK	○ OK
	BACnet® Gateway		UTY-ABGX	○ *2 *3 OK	○ *2 *3 OK
Service and Maintenance	Service Tool		UTY-ASGX	○ OK	○ OK
	Web Monitoring Tool		UTY-AMGX	○ *2 OK	○ *2 OK

*1: Since Signal filter mode is not contained, please use "UTY-VSGXZ1", when use Signal filter mode.

*2: Different VRF series may be connected for each of the 4 VRF networks supported by the unit, but different series may not coexist within the same network.

*3: There are differences in the interface specification between UTY-ABGX / UTR-YLBA.

NOTES

NOTES

4. ABOUT CONNECTION BETWEEN SERIES

4-1. PIPING CONNECTION

Note: VR-II, V-II and J-II cannot be connected by the piping in the same refrigerant system

■ EXAMPLE1 (OK)

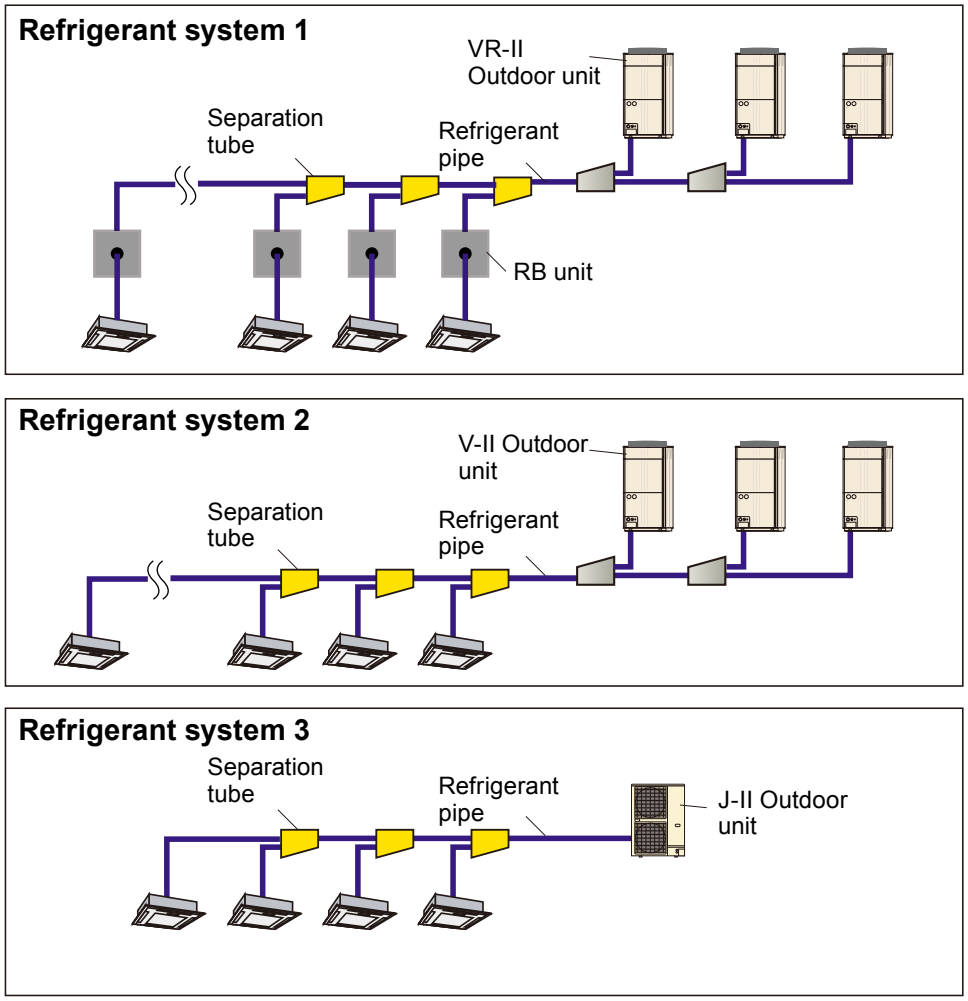

■ EXAMPLE2 (Prohibited)

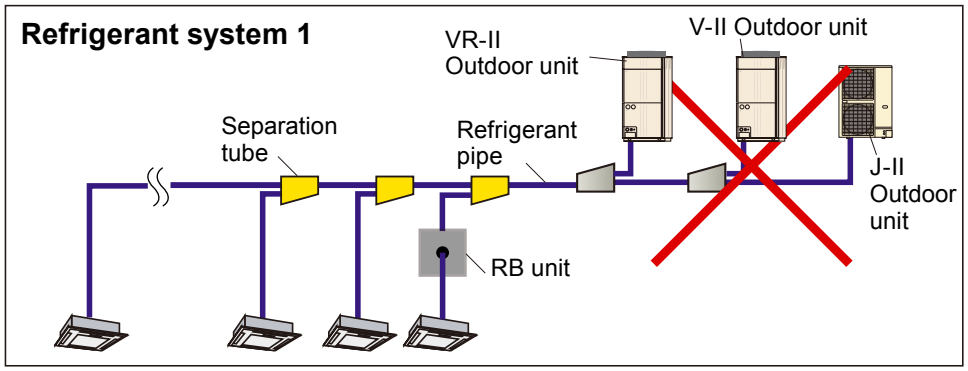

NOTES

NOTES

4-2. WIRING CONNECTION

Note: VR-II, V-II and J-II can be connected by the wiring in the same VRF network system

■ EXAMPLE1 (OK)

When wiring to each refrigerant system

VRF network system

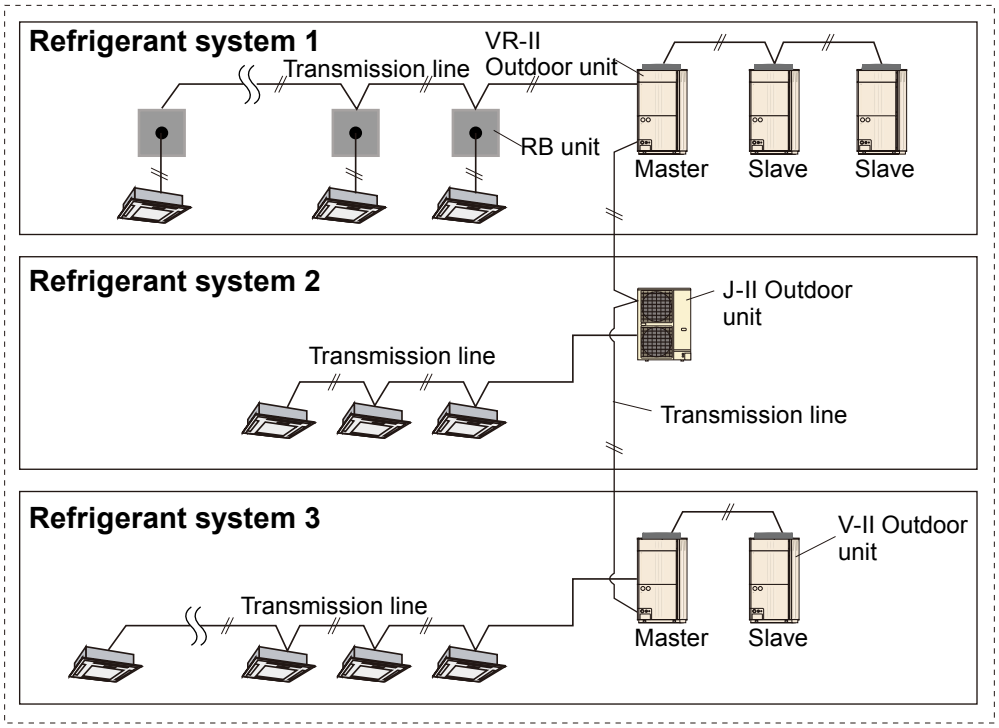

● Connection method to terminal

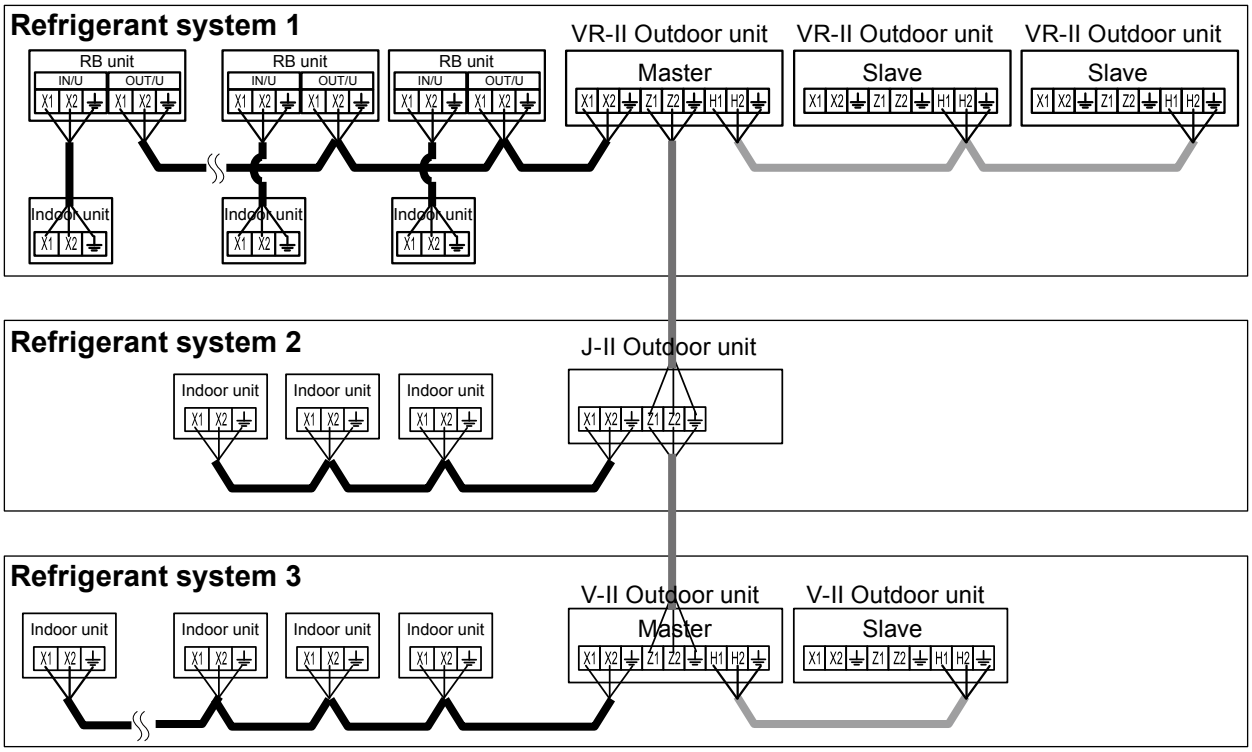

NOTES

NOTES

■ EXAMPLE2 (OK)

When stepping over, and wiring to the refrigerant system

VRF network system

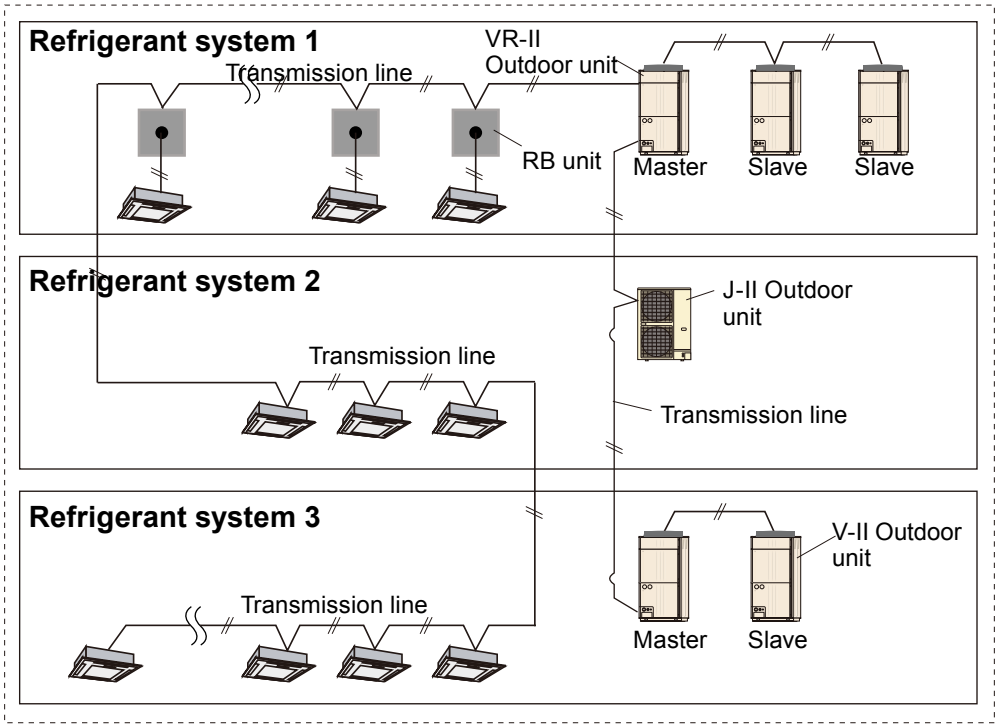

● Connection method to terminal

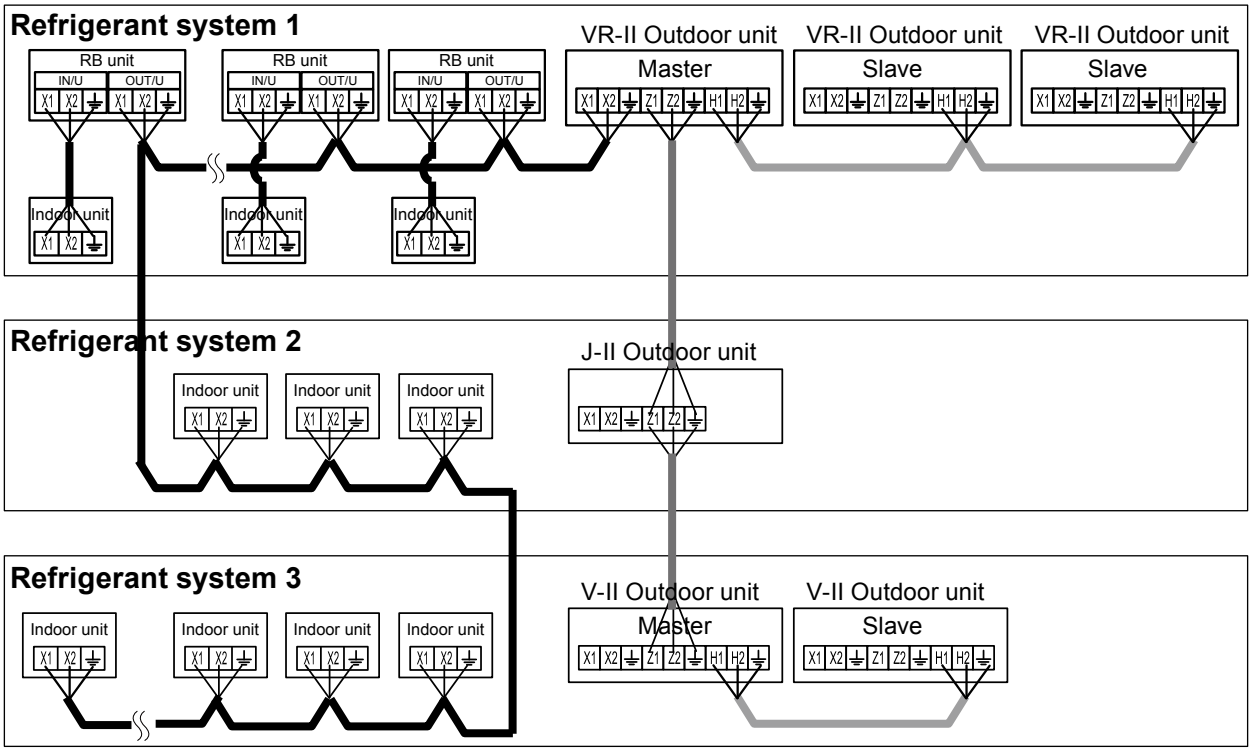

NOTES

NOTES

■ EXAMPLE3 (Prohibited)

Note: Slave unit of VR-II, V-II and J-II cannot be connected

VRF network system

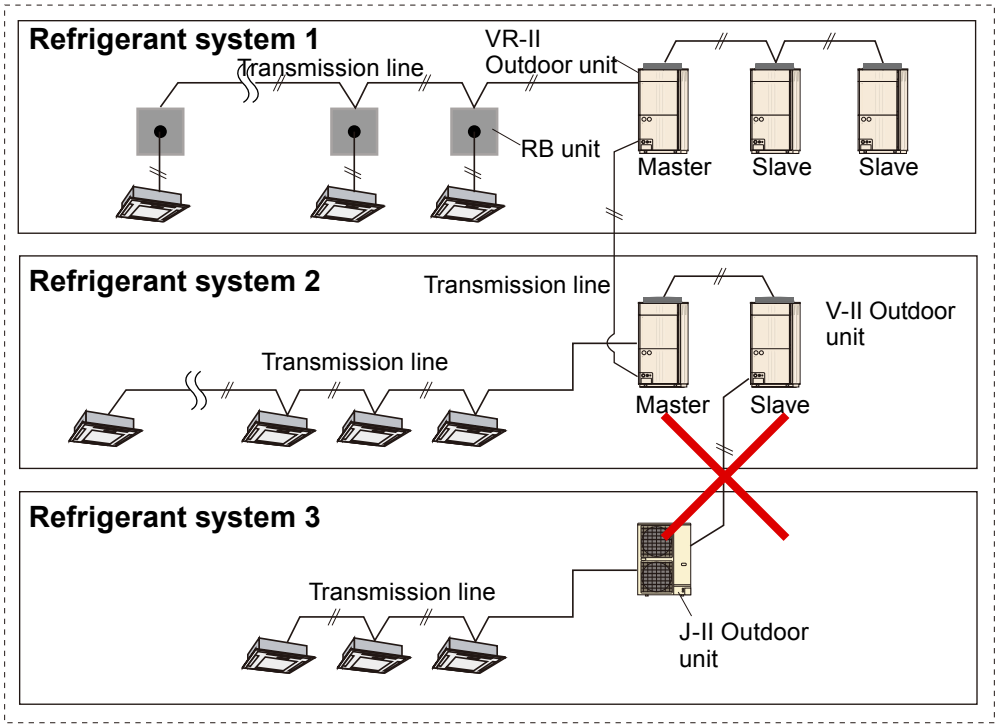

● Connection method to terminal

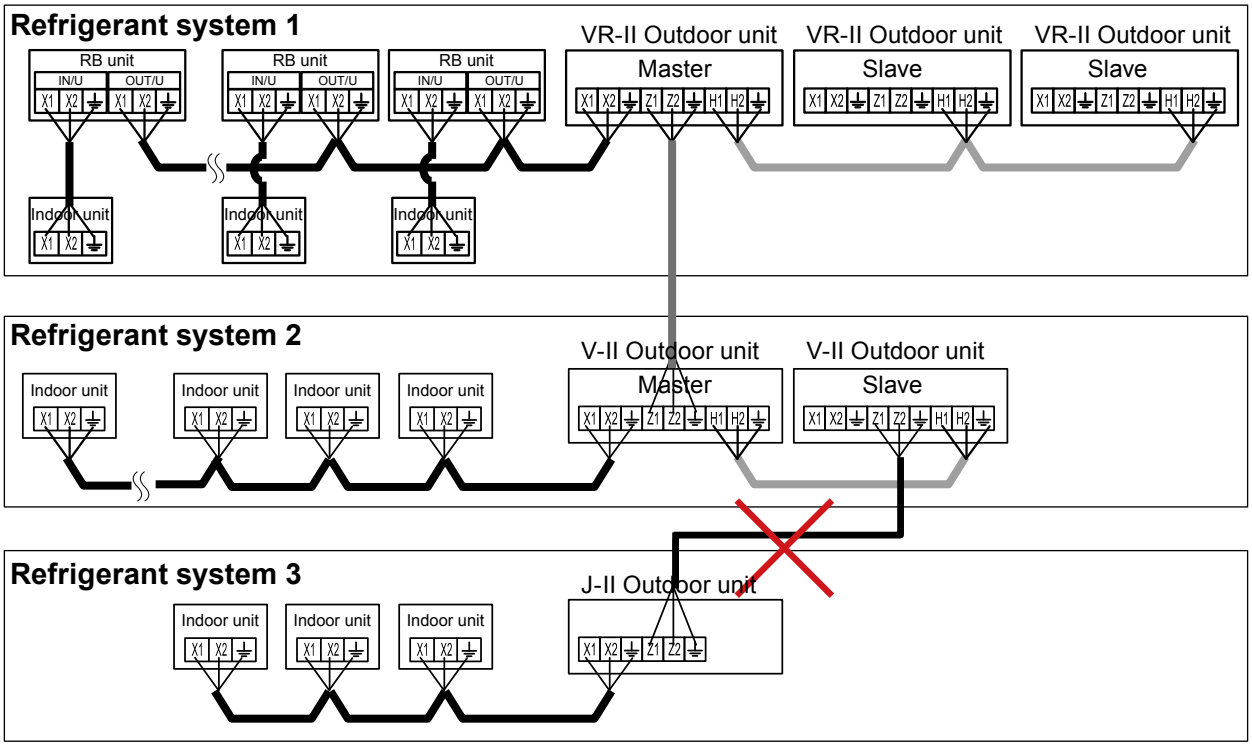

NOTES

NOTES

Refrigerant R410A INVERTER

AIRSTAGE™
Variable Refrigerant Flow System

10. OPTIONAL PARTS

DTV_VR2E018E_03--CHAPTER10
2013.04.01

CONTENTS

10. OPTIONAL PARTS

1. SEPARATION TUBE ..... 10 - 01
   1-1. SEPARATION TUBE FOR 2 PIPES ..... 10 - 04
   1-2. SEPARATION TUBE FOR 3 PIPES ..... 10 - 10
2. OUTDOOR UNIT BRANCH KIT ..... 10 - 16
3. HEADER ..... 10 - 18
   3-1. HEADER FOR 2 PIPES ..... 10 - 19
   3-2. HEADER FOR 3 PIPES ..... 10 - 23
4. EV KIT ..... 10 - 31
5. RB UNIT ..... 10 - 32
   5-1. SPECIFICATIONS ..... 10 - 32
   5-2. DIMENSIONS ..... 10 - 33
   5-3. INSTALLATION ..... 10 - 35
   5-4. REFRIGERANT CIRCUIT ..... 10 - 37
   5-5. WIRING DIAGRAMS ..... 10 - 39
   5-6. ELECTRIC CHARACTERISTICS ..... 10 - 42
   5-7. SAFETY DEVICES ..... 10 - 43
6. CONTROLLER ..... 10 - 44
7. ADAPTOR / CONVERTOR / MAINTENANCE ..... 10 - 45
8. CASSETTE GRILLE ..... 10 - 46
9. OTHERS ..... 10 - 47
   9-1. PARTS LIST ..... 10 - 47
10. OPTIONAL PARTS INSTALLATION ..... 10 - 53
   10-1. DRAIN PUMP UNIT ..... 10 - 53
   10-2. FRESH AIR INTAKE KIT (MODEL : UTZ-VXAA) ..... 10 - 60
   10-3. FRESH AIR INTAKE KIT (MODEL : UTZ-VXGA) ..... 10 - 67
   10-4. AUTO LOUVER GRILLE KIT ..... 10 - 74

1. SEPARATION TUBE

■ CONNECTION CAPACITY

Total cooling capacity of indoor units (kW) *1	Separation tube	
	For 2 pipes	For 3 pipes
28.0 or less	UTR-BP090X or UTP-AX090A	UTP-BX090A
28.1 to 56.0	UTR-BP180X or UTP-AX180A	UTP-BX180A
56.1 or more	UTR-BP567X or UTP-AX567A	UTP-BX567A

Each Value above such as 28.0, 28.1, 56.0 and 56.1[kw] means total cooling capacity at rated condition of indoor unit connected under the targeted separation tube.

*1: Calculate the cooling capacity of indoor unit with model code 04 (Ex. AUXB04) as “2.2 kW”.

● For 2 pipes

(UNIT : kW)

UTR-BP090X

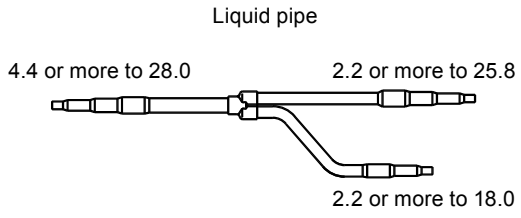

UTR-BP180X

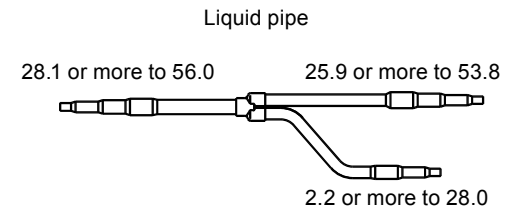

UTR-BP567X

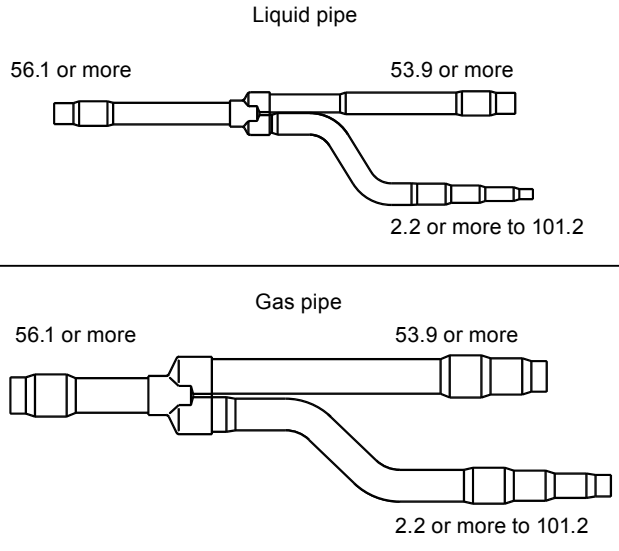

OPTIONAL PARTS

● For 2 pipes

(UNIT : kW)

UTP-AX090A	UTP-AX180A
Liquid pipe 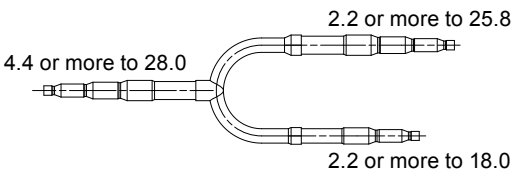 	Liquid pipe 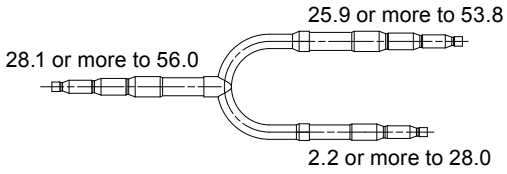
Gas pipe 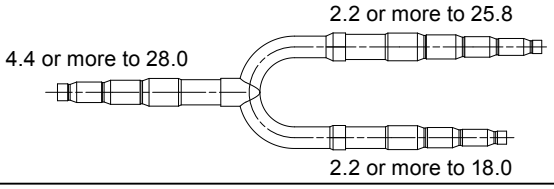 	Gas pipe 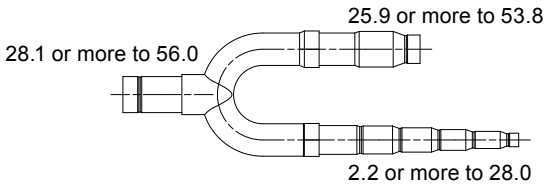

UTP-AX567A
Liquid pipe 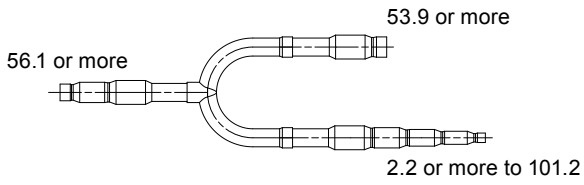
Gas pipe 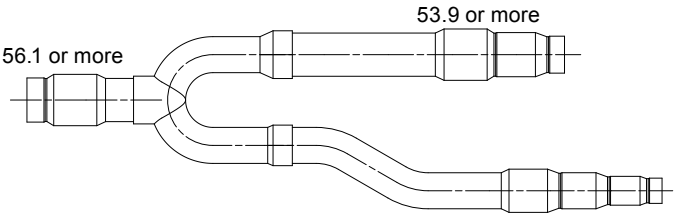

● For 3 pipes

(UNIT : kW)

UTP-BX090A	UTP-BX180A
Liquid pipe 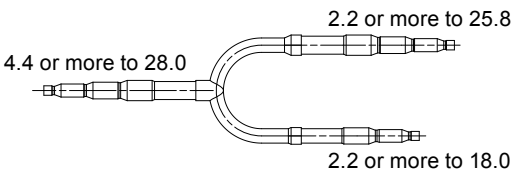 	Liquid pipe 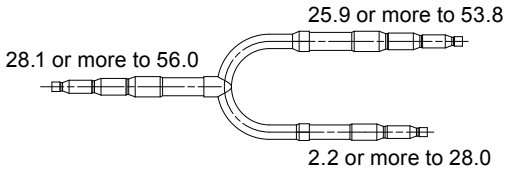
Discharge gas pipe 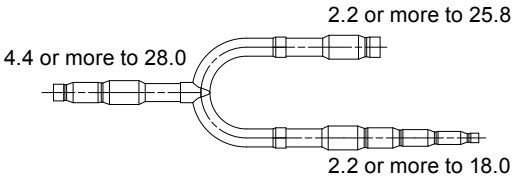 	Discharge gas pipe 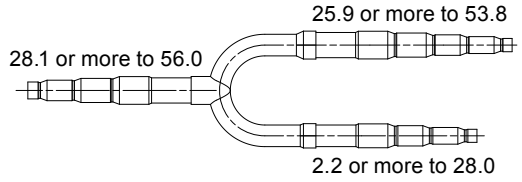
Suction gas pipe 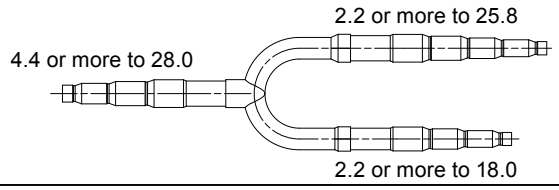 	Suction gas pipe 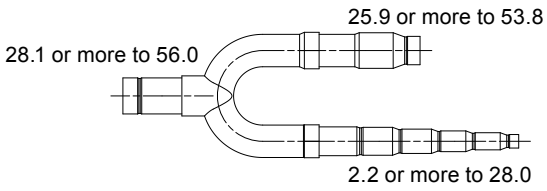

UTP-BX567A
Liquid pipe 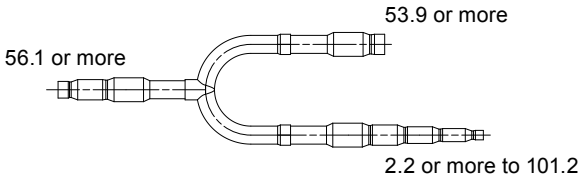
Discharge gas pipe 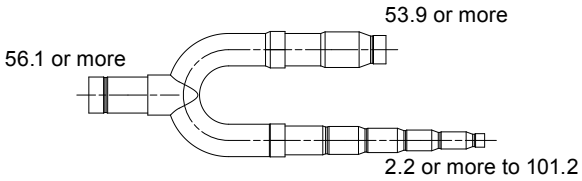
Suction gas pipe 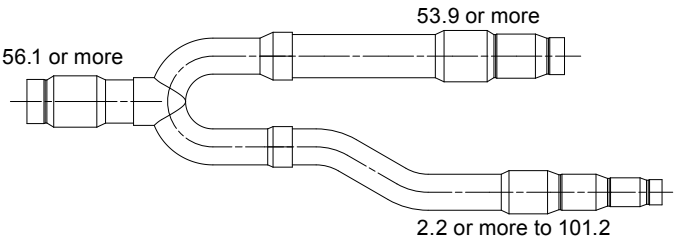

OPTIONAL PARTS

1-1. SEPARATION TUBE FOR 2 PIPES

■ UTR-BP090X

(Unit : mm)

● Port diameters

Liquid pipe	Q'ty	Gas pipe	Q'ty
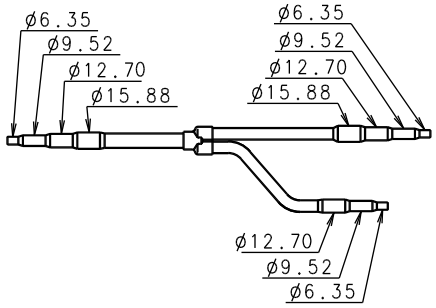	1	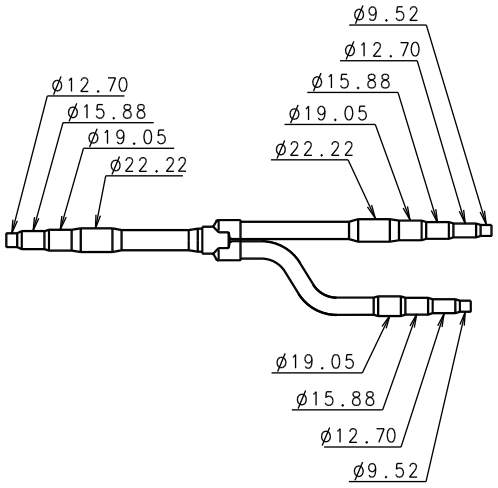	1

● Heat insulation

Heat insulation	Q'ty	Application
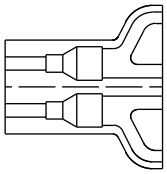	2	Large x 1 (for gas pipe) Small x 1 (for liquid pipe)

Tape	Q'ty
	8

● Dimensions

Liquid pipe	Gas pipe
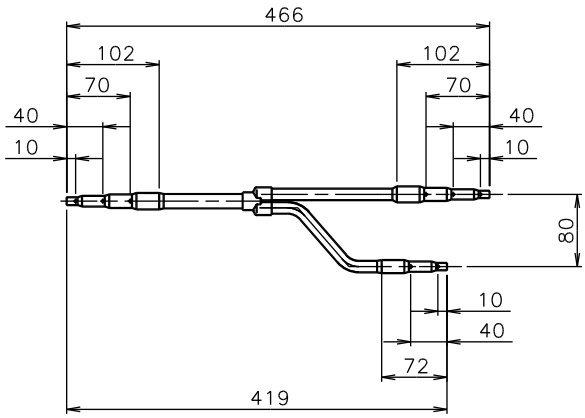	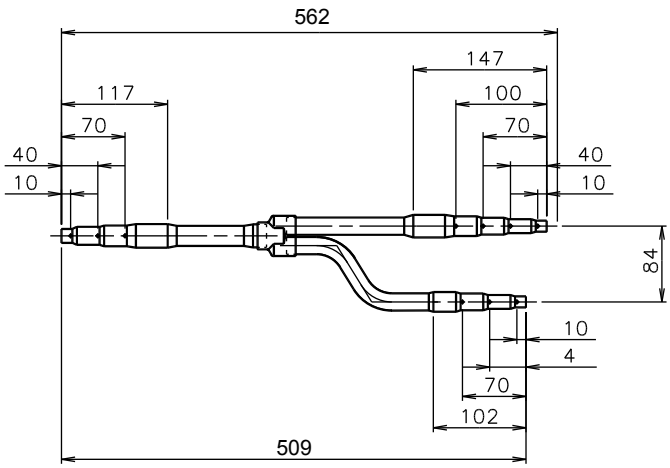

■ UTR-BP180X

(Unit : mm)

● Port diameters

Liquid pipe	Q'ty	Gas pipe	Q'ty
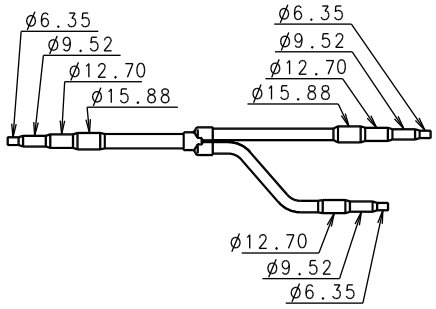	1	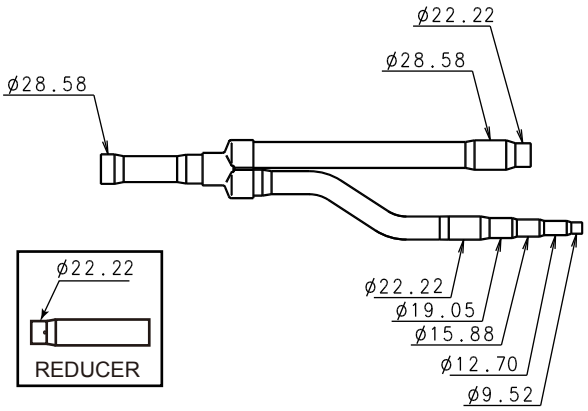	1

● Heat insulation

Heat insulation	Q'ty	Application
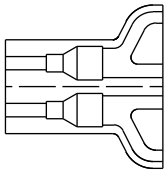	2	Large x 1 (for gas pipe) Small x 1 (for liquid pipe)

Tape	Q'ty
	8

● Dimensions

Liquid pipe	Gas pipe
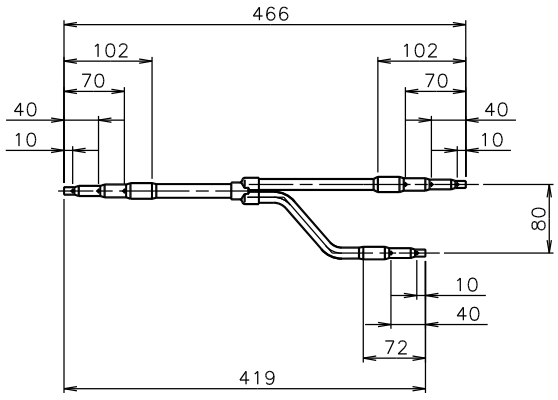	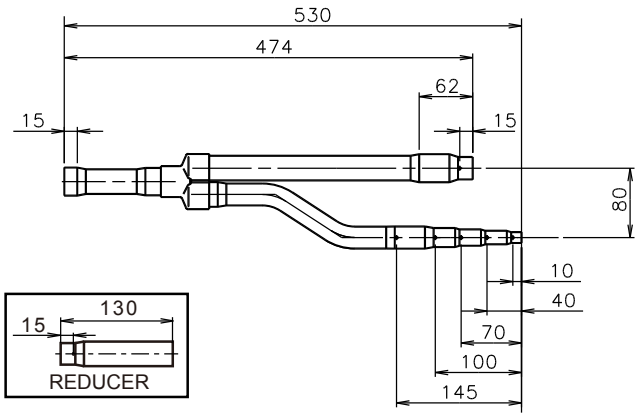

■ UTR-BP567X

(Unit : mm)

● Port diameters

Liquid pipe	Q'ty	Gas pipe	Q'ty
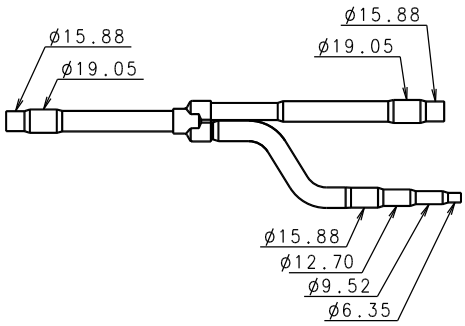	1	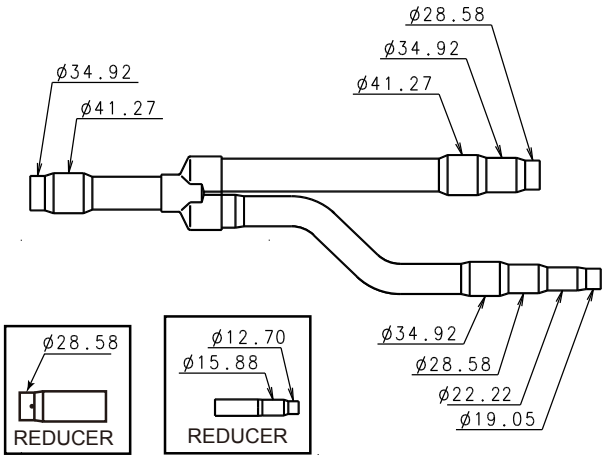	1

● Heat insulation

Heat insulation	Q'ty	Application
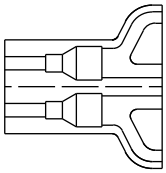	2	Large x 1 (for gas pipe) Small x 1 (for liquid pipe)

Tape	Q'ty
	8

● Dimensions

Liquid pipe	Gas pipe
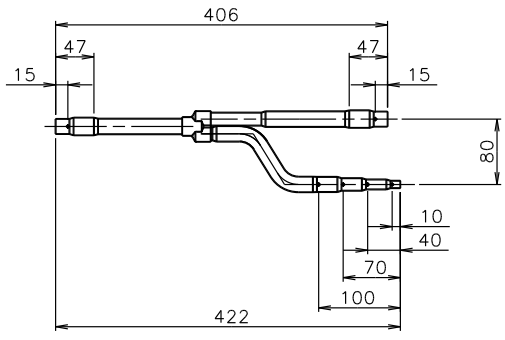	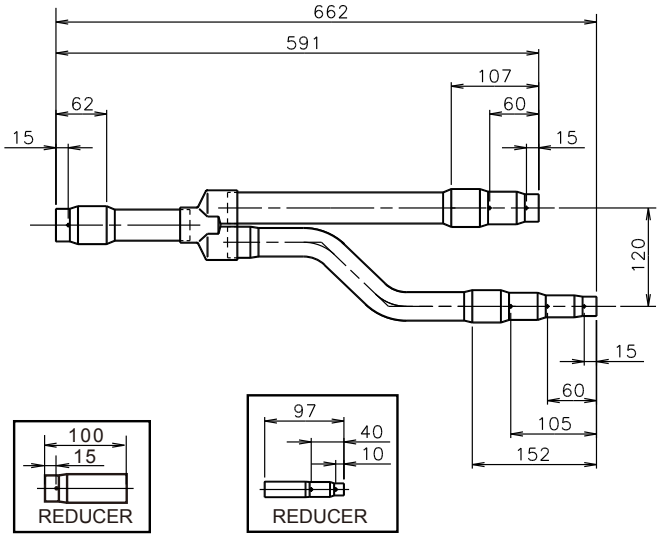

■ UTP-AX090A

● Port diameters

Liquid pipe	Q'ty	Gas pipe	Q'ty
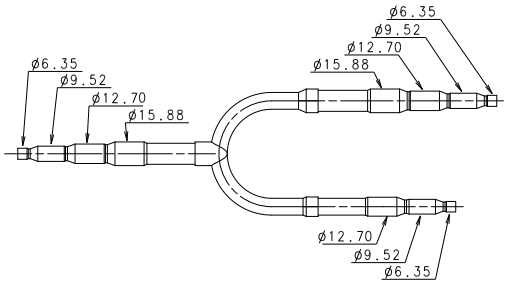	1	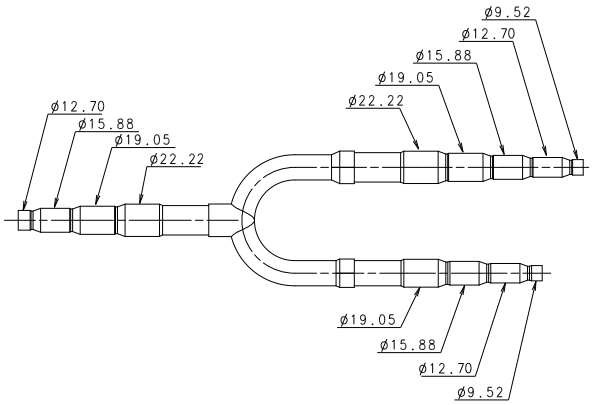	1

● Heat insulation

Heat insulation	Q'ty	Application
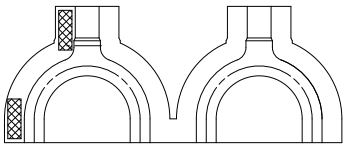	2	for Liquid pipe x1 for Gas pipe x1

Tape	Q'ty
	8

● Dimensions

Liquid pipe	Gas pipe
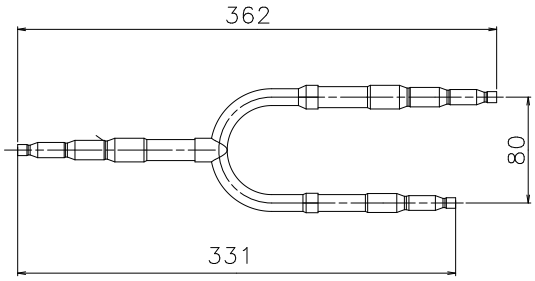	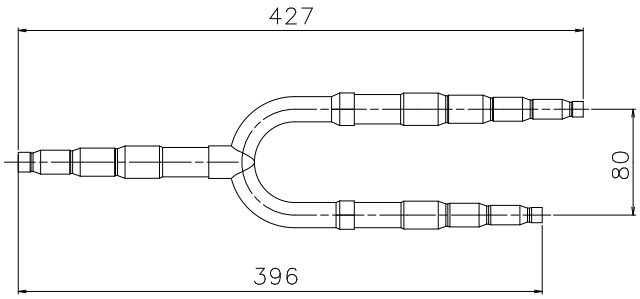

OPTIONAL PARTS

■ UTP-AX180A

● Port diameters

Liquid pipe	Q'ty	Gas pipe	Q'ty
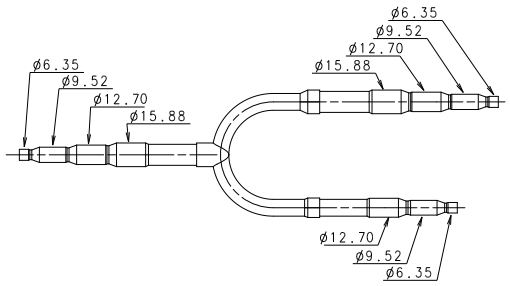	1	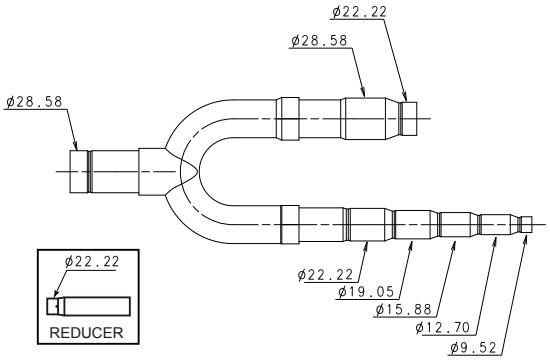	1

● Heat insulation

Heat insulation	Q'ty	Application
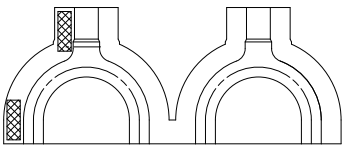	2	for Liquid pipe x1 for Gas pipe x1

Tape	Q'ty
	8

● Dimensions

Liquid pipe	Gas pipe
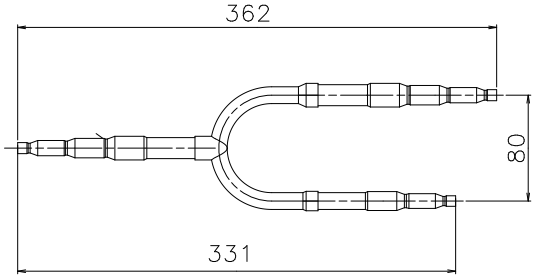	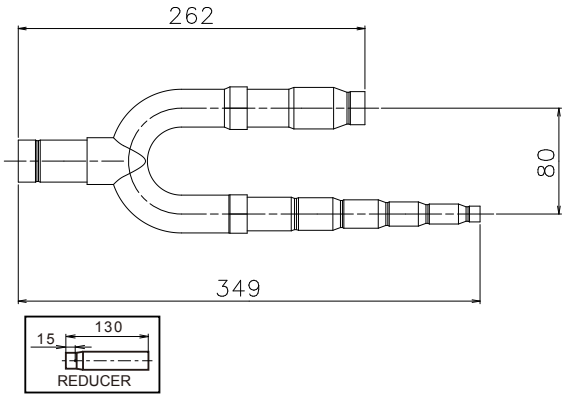

OPTIONAL PARTS

■ UTP-AX567A

● Port diameters

Liquid pipe	Q'ty	Gas pipe	Q'ty
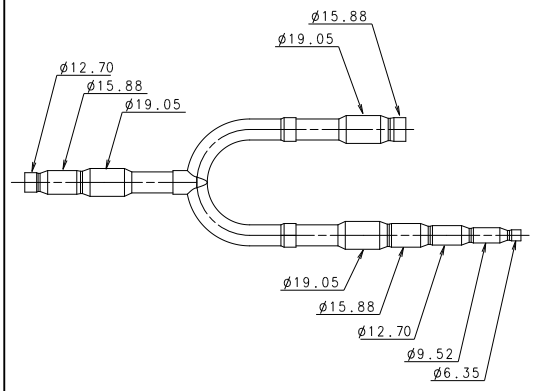	1	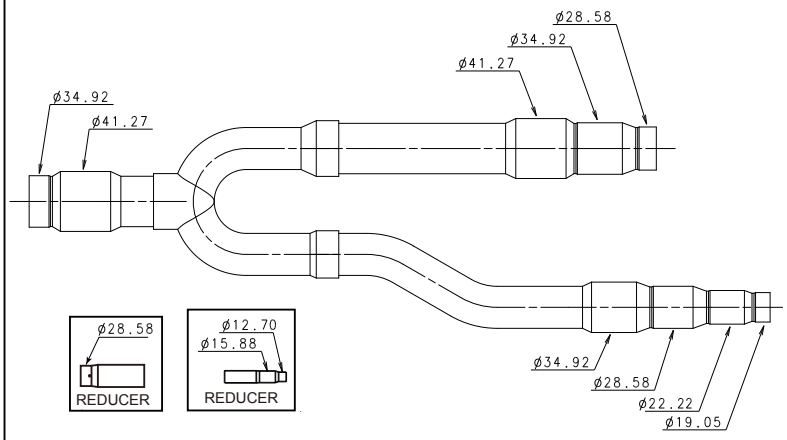	1

● Heat insulation

Heat insulation	Q'ty	Application
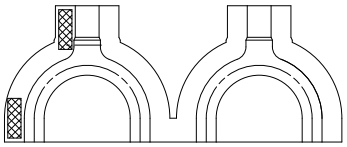	2	for Liquid pipe x1 for Gas pipe x1

Tape	Q'ty
	8

● Dimensions

Liquid pipe	Gas pipe
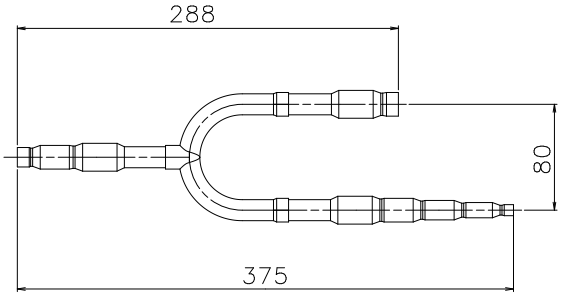	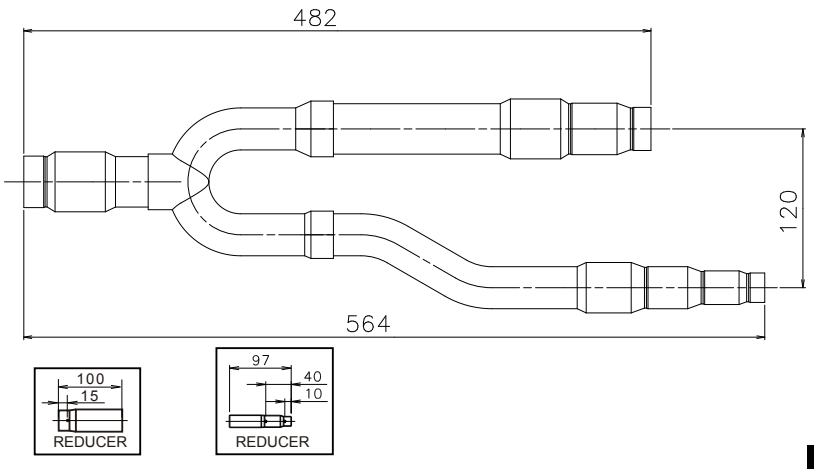

1-2. SEPARATION TUBE FOR 3 PIPES

■ UTP-BX090A

● Port diameters

Liquid pipe	Q'ty
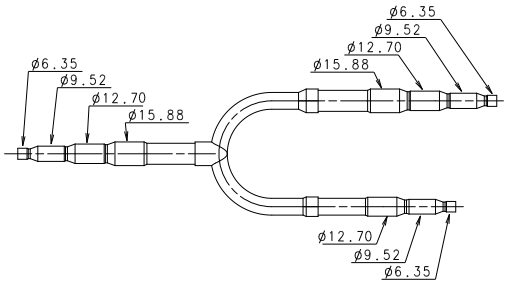	1

Discharge gas pipe	Q'ty
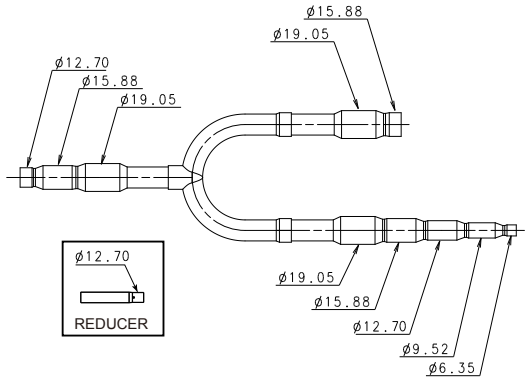	1

Suction gas pipe	Q'ty
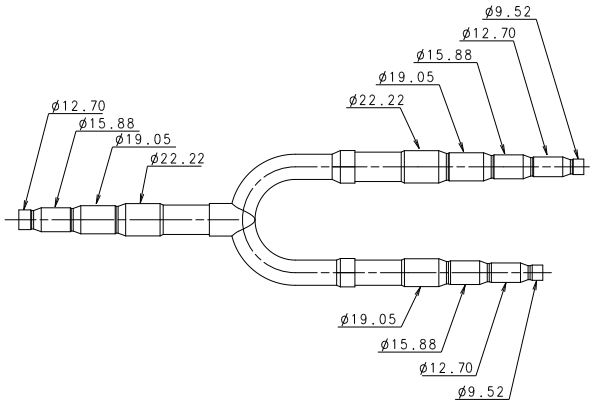	1

● Heat insulation

Heat insulation	Q'ty	Application
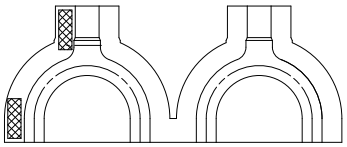	3	for Liquid pipe x1 for Discharge gas pipe x1 for Suction gas pipe x1

Tape	Q'ty
	8

OPTIONAL PARTS

● Dimensions

Liquid pipe	Discharge gas pipe
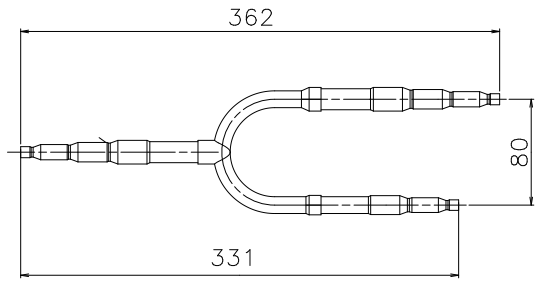	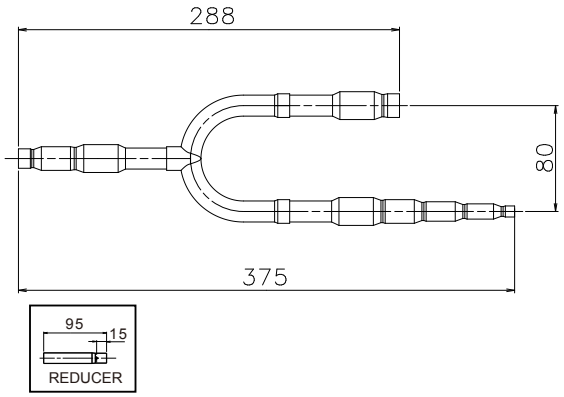

Suction gas pipe
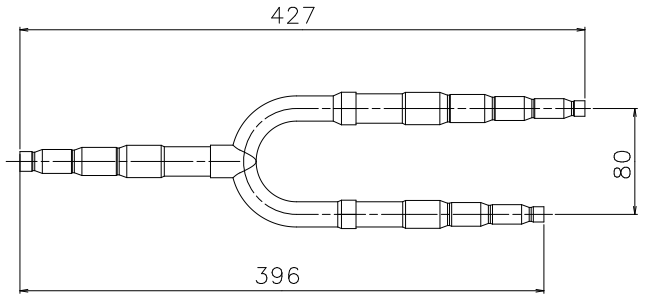

■ UTP-BX180A

● Port diameters

Liquid pipe	Q'ty
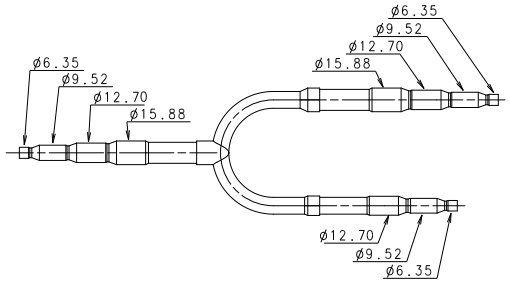	1

Discharge gas pipe	Q'ty
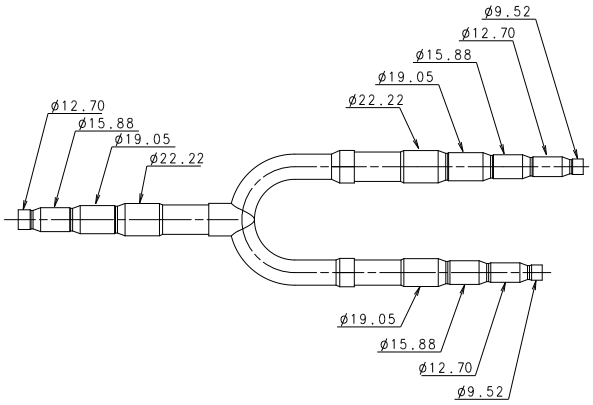	1

Suction gas pipe	Q'ty
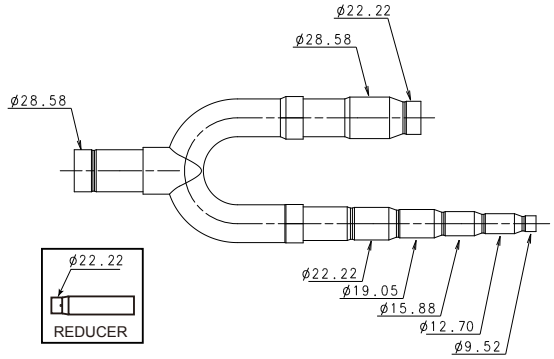	1

● Heat insulation

Heat insulation	Q'ty	Application
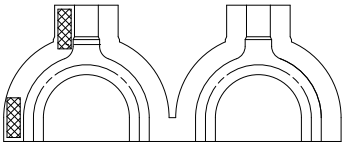	3	for Liquid pipe x1 for Discharge gas pipe x1 for Suction gas pipe x1

Tape	Q'ty
	8

OPTIONAL PARTS

● Dimensions

Liquid pipe	Discharge gas pipe
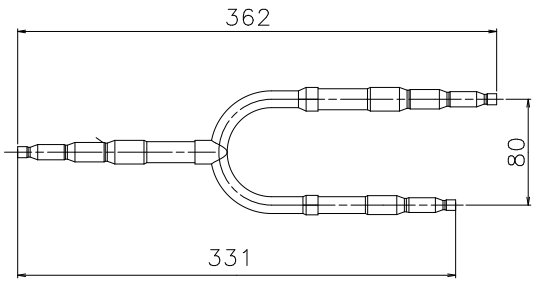	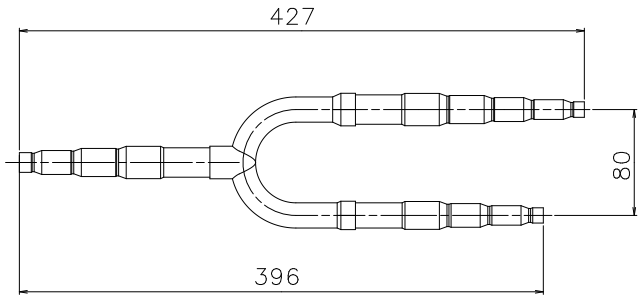

Suction gas pipe
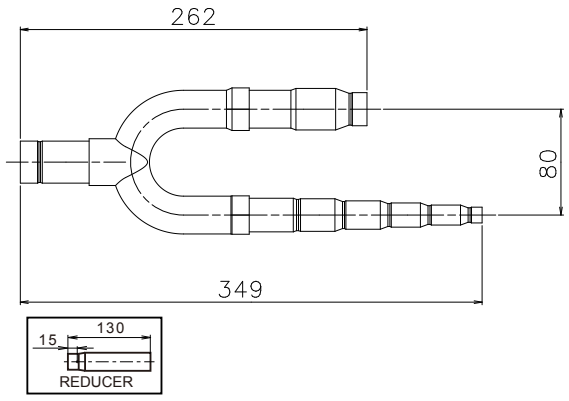

■ UTP-BX567A

● Port diameters

Liquid pipe	Q'ty
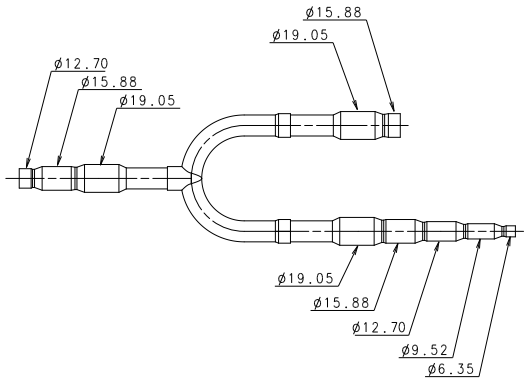	1

Discharge gas pipe	Q'ty
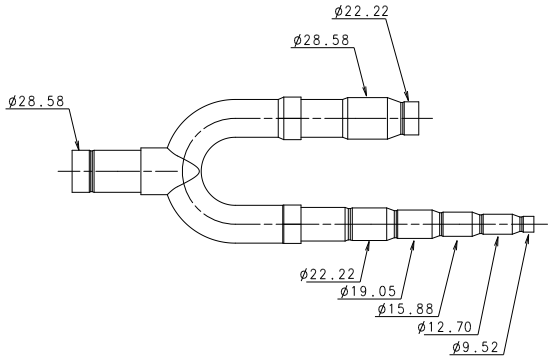	1

Suction gas pipe	Q'ty
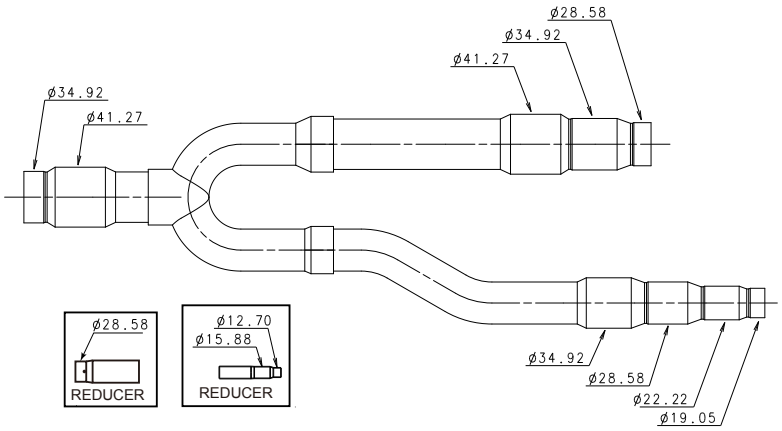	1

● Heat insulation

Heat insulation	Q'ty	Application
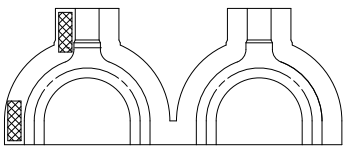	3	for Liquid pipe x1 for Discharge gas pipe x1 for Suction gas pipe x1

Tape	Q'ty
	8

OPTIONAL PARTS

● Dimensions

Liquid pipe	Discharge gas pipe
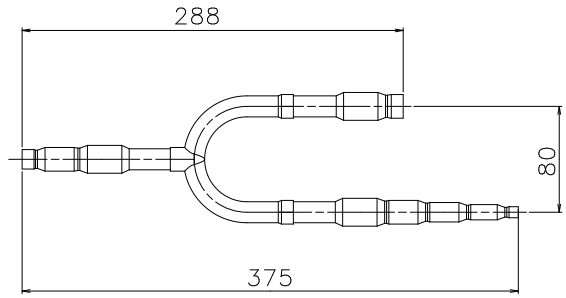	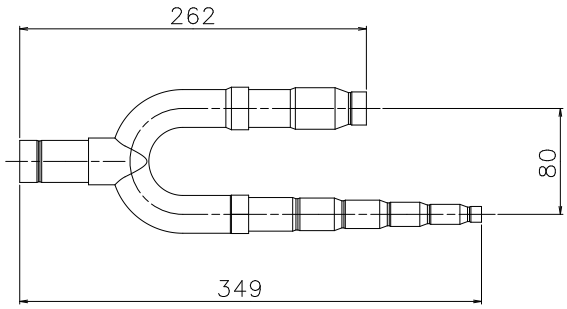

Suction gas pipe
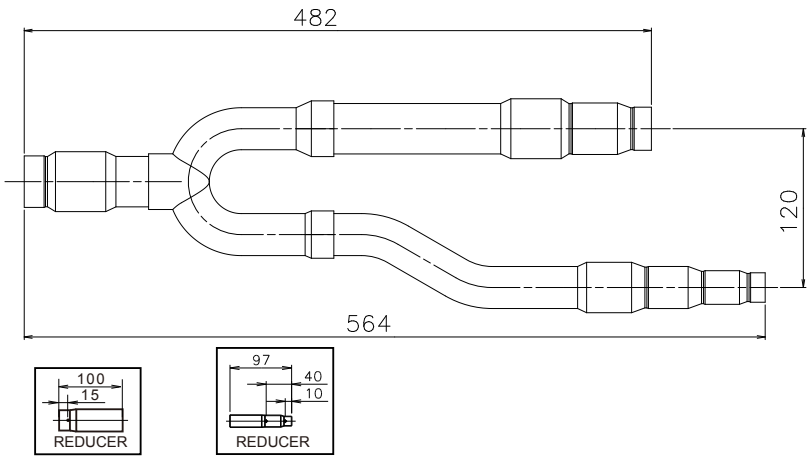

2. OUTDOOR UNIT BRANCH KIT

■ UTP-DX567A

(Unit : mm)

● Port diameters

Liquid pipe	Q'ty
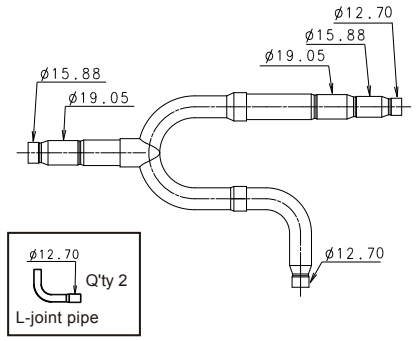	1

Discharge gas pipe	Q'ty
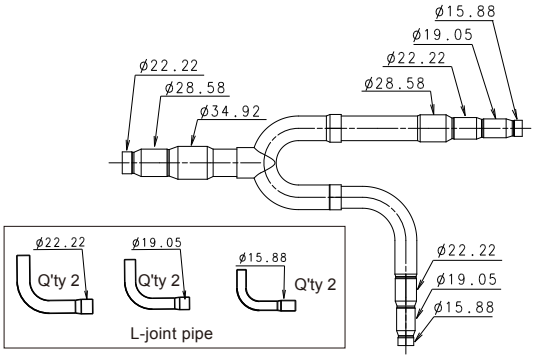	1

Suction gas pipe	Q'ty
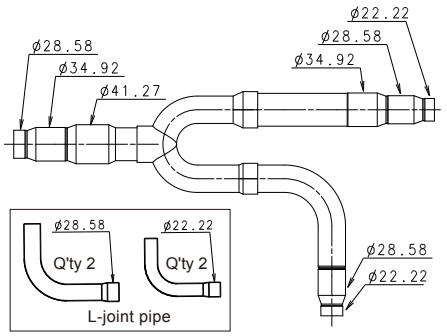	1

● Heat insulation

Heat insulation	Q'ty	Application
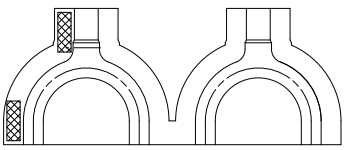	3	for Liquid pipe x1 for Discharge gas pipe x1 for Suction gas pipe x1

Tape	Q'ty
	8

OPTIONAL PARTS

● Dimensions

Liquid pipe

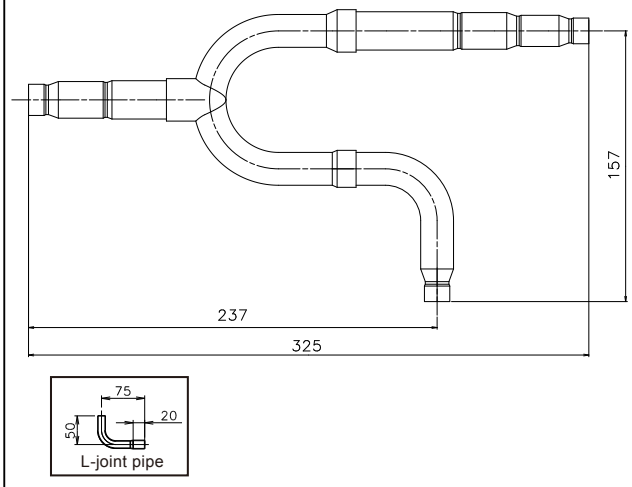

Discharge gas pipe

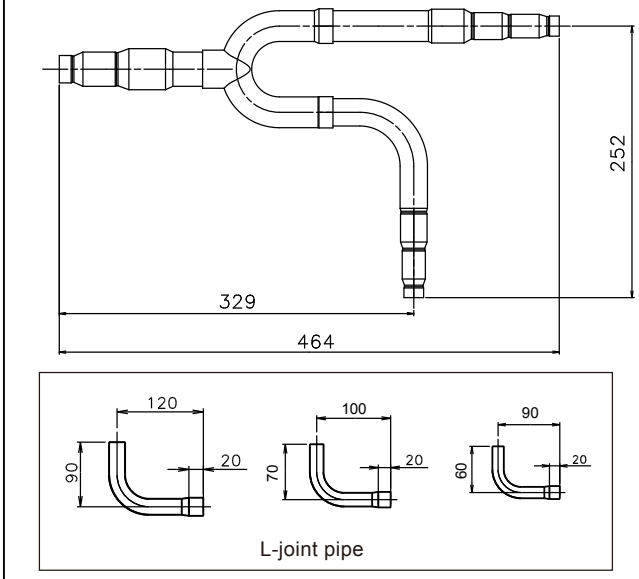

Suction gas pipe

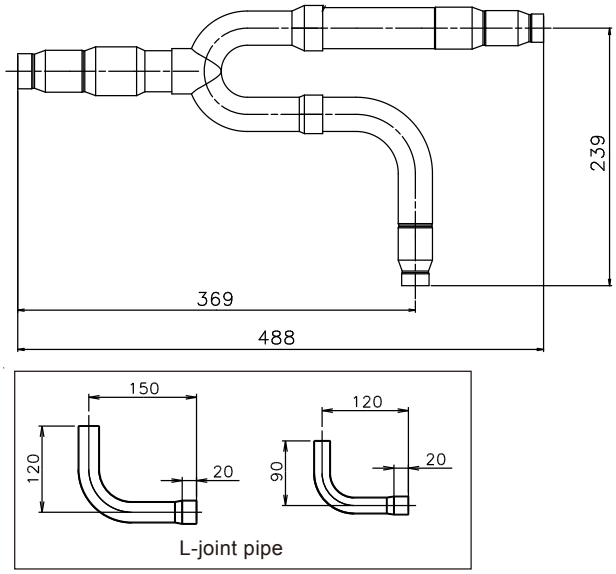

3. HEADER

■ CONNECTING CAPACITY

Total cooling capacity of indoor units (kW) *1	For 2 pipes		For 3 pipes	
	3 - 6 Branches	3 - 8 Branches	3 - 6 Branches	3 - 8 Branches
28.0 or less	UTR-H0906L	UTR-H0908L	UTP-J0906A	UTP-J0908A
28.1 to 56.0	UTR-H1806L	UTR-H1808L	UTP-J1806A	UTP-J1808A

Each Value above such as 28.0, 28.1 and 56.0[kw] means total cooling capacity at rated condition of indoor unit connected under the targeted header tube.

*1: Calculate the cooling capacity of indoor unit with model code 04 (Ex. AUXB04) as “2.2 kW”.

OPTIONAL PARTS

3-1. HEADER FOR 2 PIPES

■ MODEL : UTR-H0906L

(Unit : mm)

● Port diameters

Liquid pipe	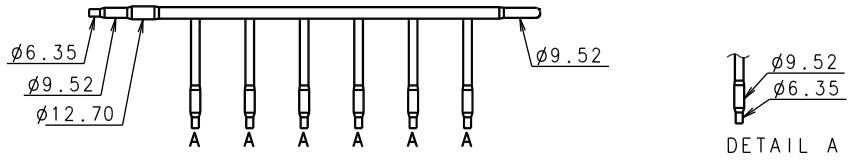
Gas pipe	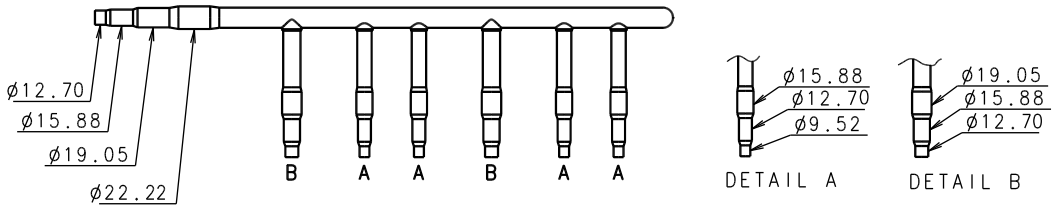

Closed pipe A	Closed pipe B	Closed pipe C	Closed pipe insulation
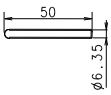 Q'ty 3	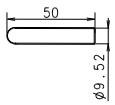 Q'ty 2	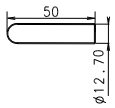 Q'ty 2	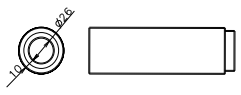 Q'ty 6

● Heat insulation

Header insulation liquid	Header insulation gas
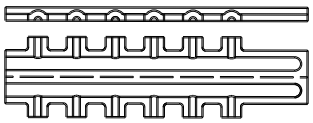 Q'ty 1	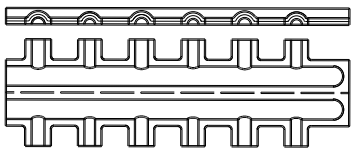 Q'ty 1

● Dimensions

Liquid pipe	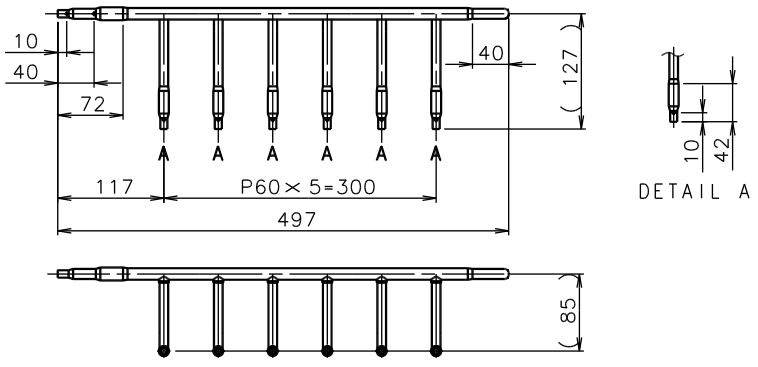
Gas pipe	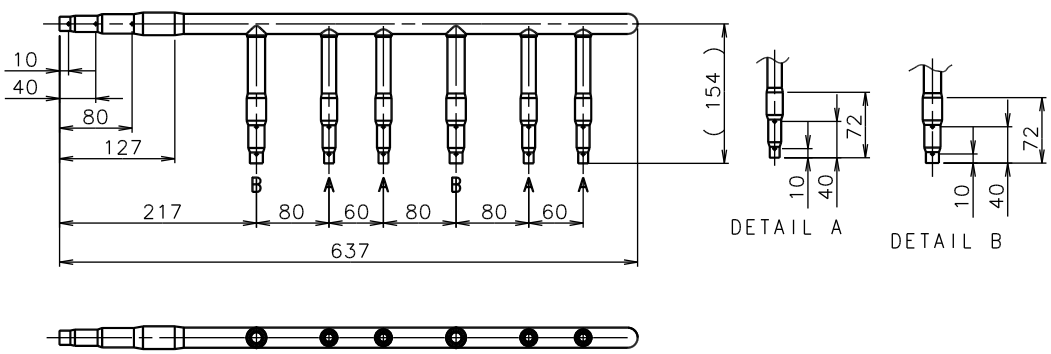

OPTIONAL PARTS

OPTIONAL PARTS

■ MODEL : UTR-H0908L

(Unit : mm)

● Port diameters

Liquid pipe	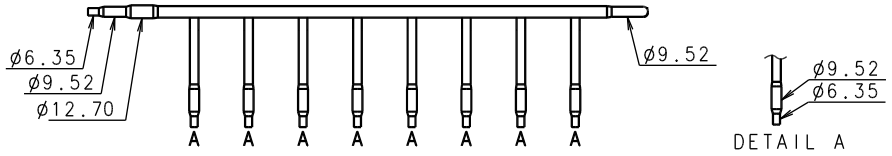
Gas pipe	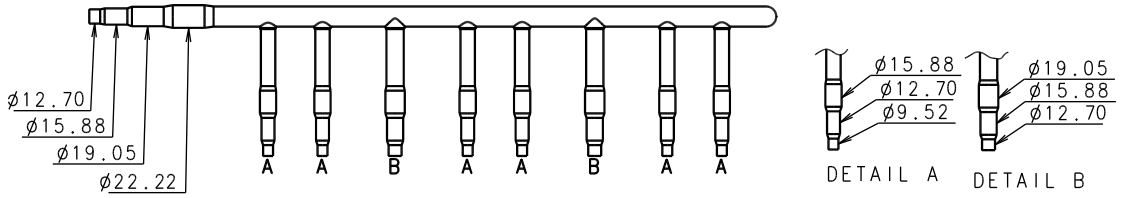

Closed pipe A	Closed pipe B	Closed pipe C	Closed pipe insulation
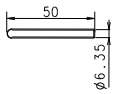	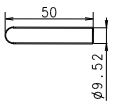	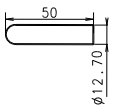	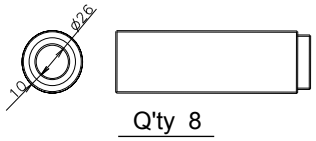
Q'ty 5	Q'ty 4	Q'ty 2	Q'ty 8

● Heat insulation

Header insulation liquid	Header insulation gas
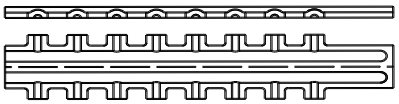	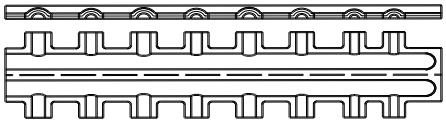
Q'ty 1	Q'ty 1

● Dimensions

Liquid pipe	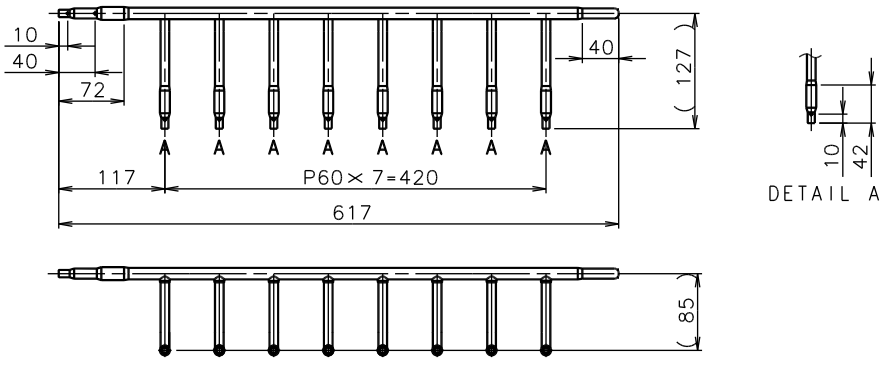
Gas pipe	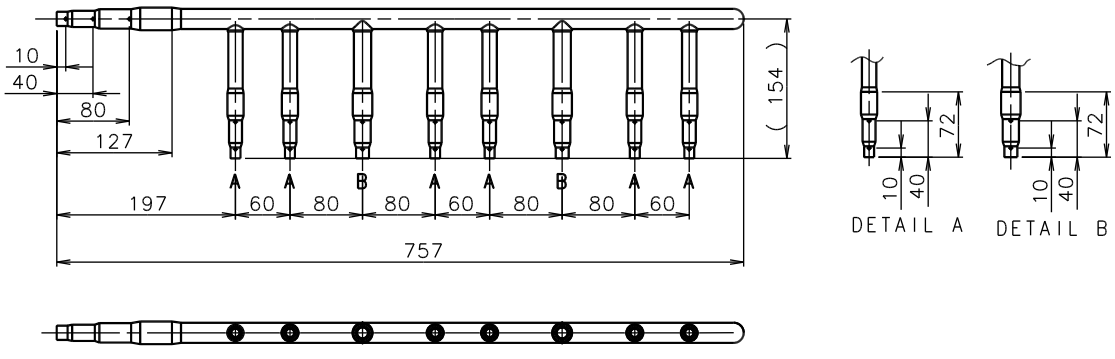

OPTIONAL PARTS

OPTIONAL PARTS

■ MODEL : UTR-H1806L

(Unit : mm)

● Port diameters

Liquid pipe	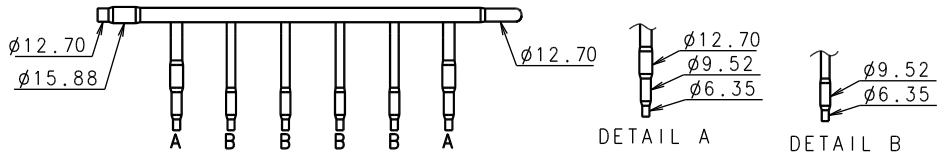
Gas pipe	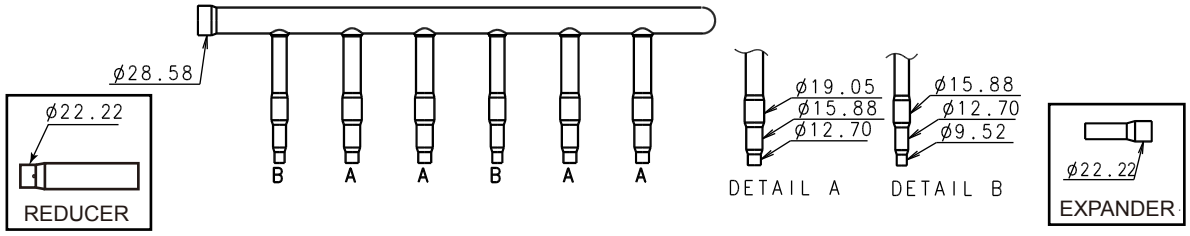

Closed pipe A	Closed pipe B	Closed pipe C	Closed pipe insulation
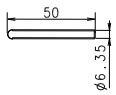 Q'ty 3	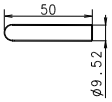 Q'ty 2	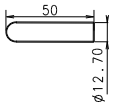 Q'ty 2	 Q'ty 6

● Heat insulation

Header insulation liquid	Header insulation gas
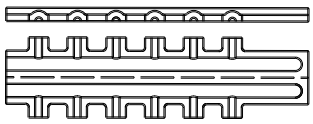 Q'ty 1	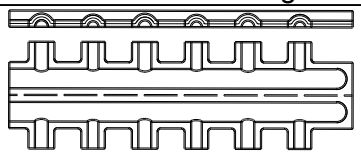 Q'ty 1

● Dimensions

Liquid pipe	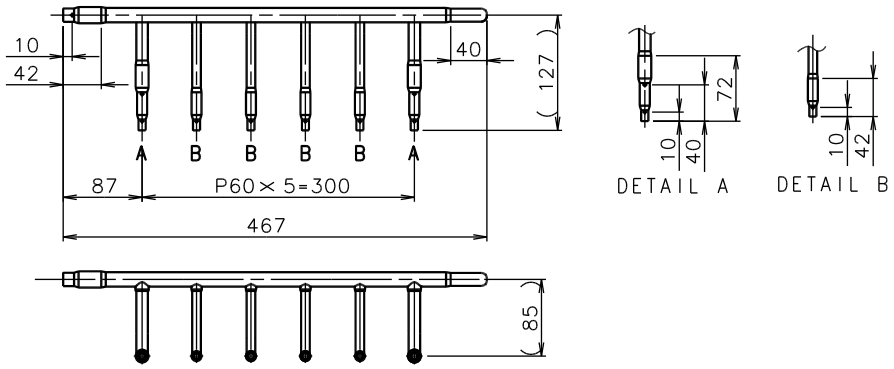
Gas pipe	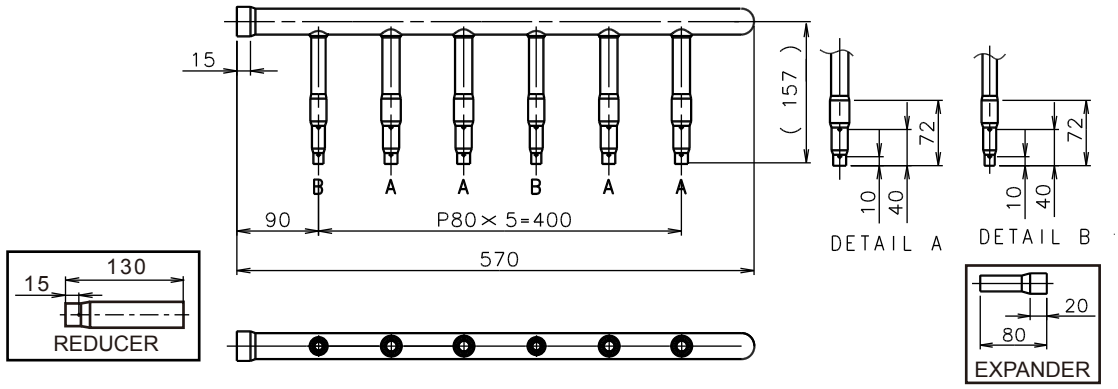

OPTIONAL PARTS

■ MODEL : UTR-H1808L

(Unit : mm)

● Port diameters

Liquid pipe	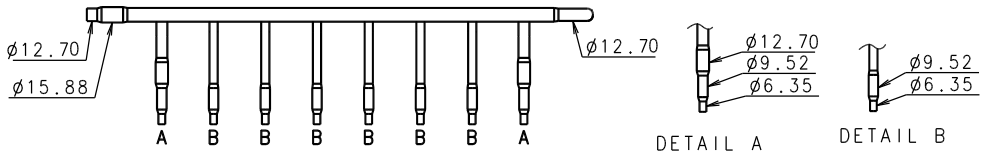
Gas pipe	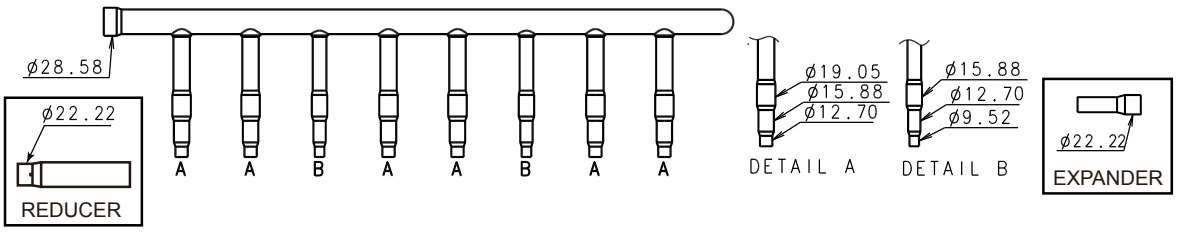

Closed pipe A	Closed pipe B	Closed pipe C	Closed pipe insulation
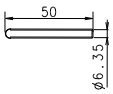 Q'ty 5	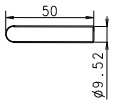 Q'ty 2	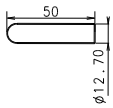 Q'ty 4	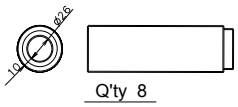 Q'ty 8

● Heat insulation

Header insulation liquid	Header insulation gas
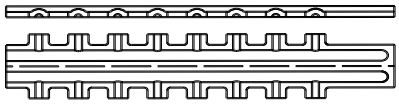 Q'ty 1	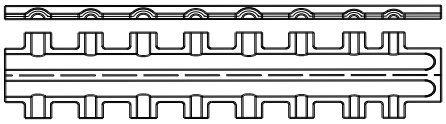 Q'ty 1

● Dimensions

Liquid pipe	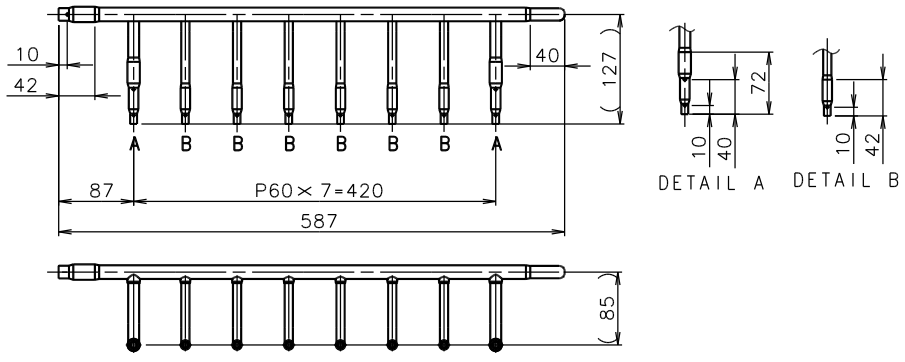
Gas pipe	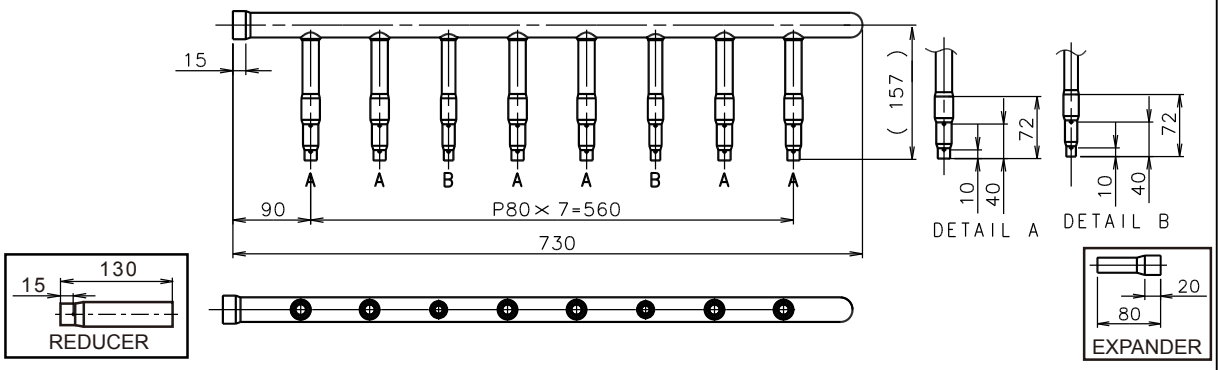

OPTIONAL PARTS

3-2. HEADER FOR 3 PIPES

■ MODEL : UTP-J0906A

● Port diameters

Liquid pipe	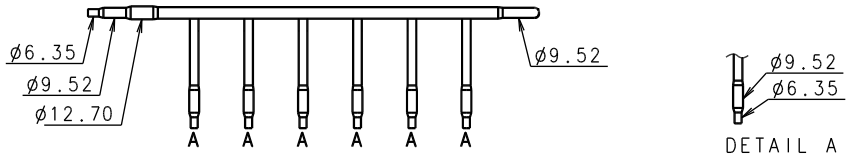
Dis-charge gas pipe	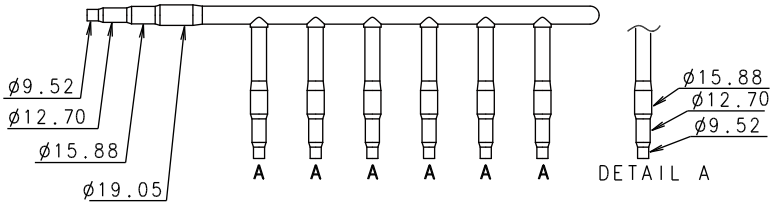
Suction gas pipe	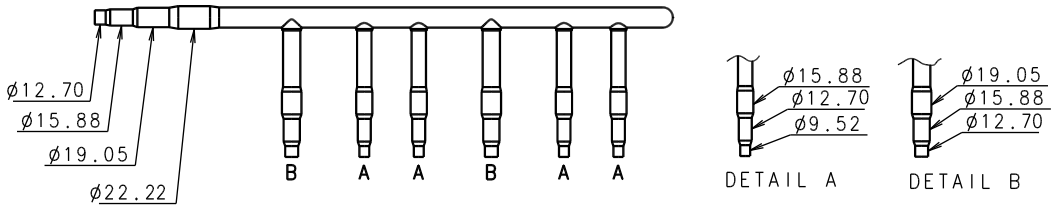

Closed pipe A	Closed pipe B	Closed pipe C	Closed pipe insulation
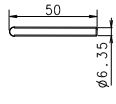	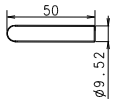	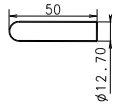	
Q'ty 3	Q'ty 5	Q'ty 2	Q'ty 9

● Heat insulation

Heat insulation	Q'ty	Application
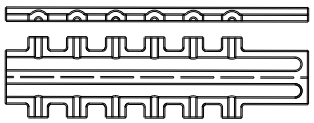	3	for Liquid pipe x1 for Discharge gas pipe x1 for Suction gas pipe x1

● Dimensions

Liquid pipe	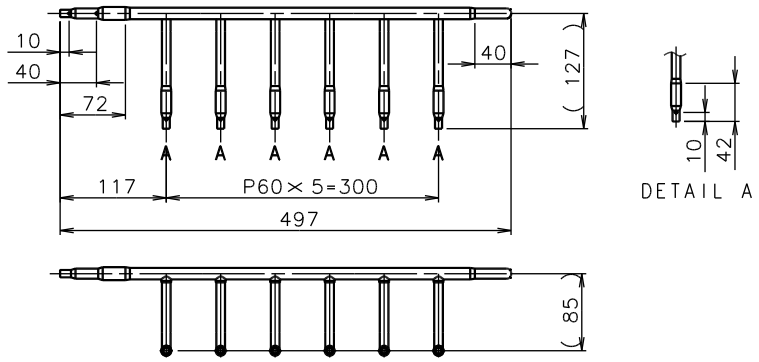
Dis-charge gas pipe	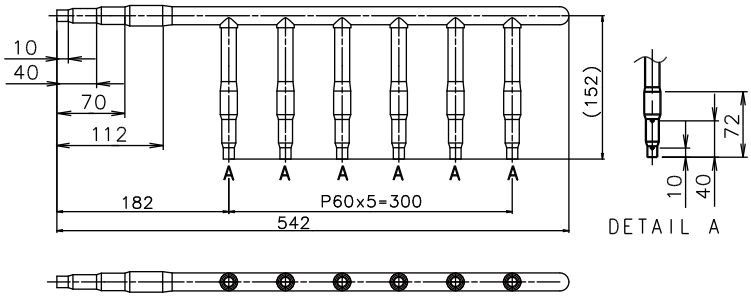
Suction gas pipe	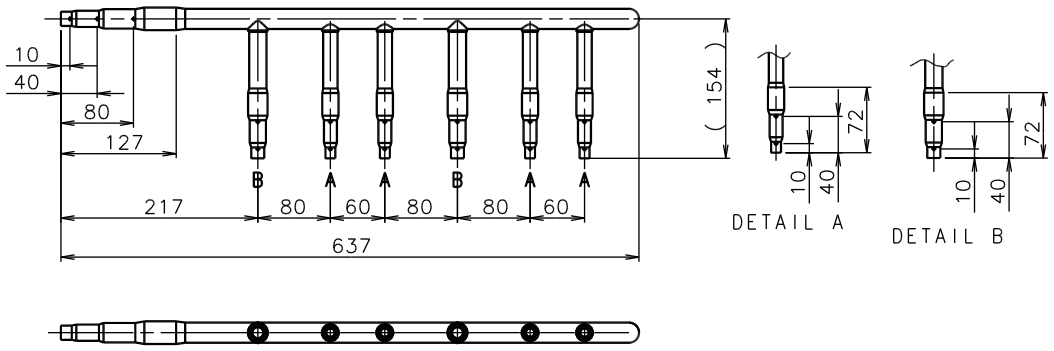

■ MODEL : UTP-J0908A

● Port diameters

Liquid pipe	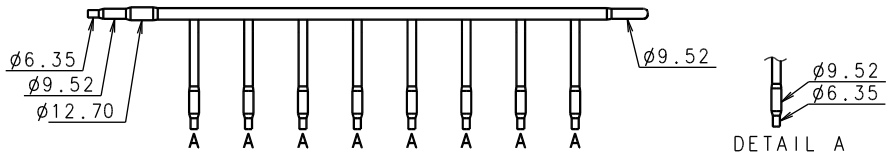
Dis-charge gas pipe	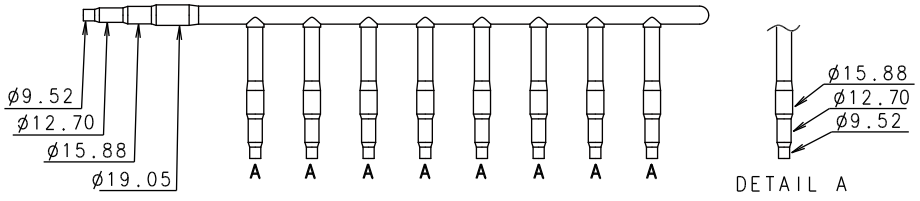
Suction gas pipe	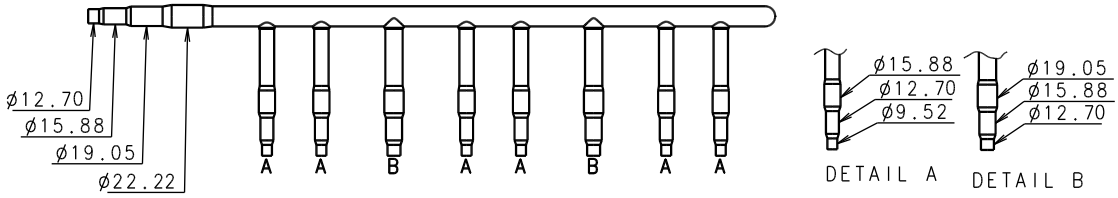

Closed pipe A	Closed pipe B	Closed pipe C	Closed pipe insulation
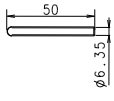	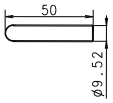	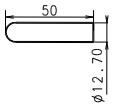	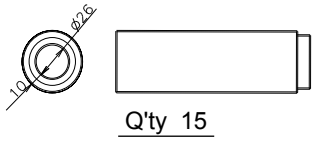
Q'ty 5	Q'ty 9	Q'ty 2	Q'ty 15

● Heat insulation

Heat insulation	Q'ty	Application
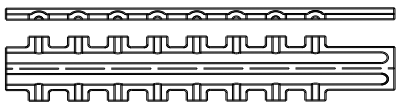	3	for Liquid pipe x1 for Discharge gas pipe x1 for Suction gas pipe x1

OPTIONAL PARTS

● Dimensions

Liquid pipe	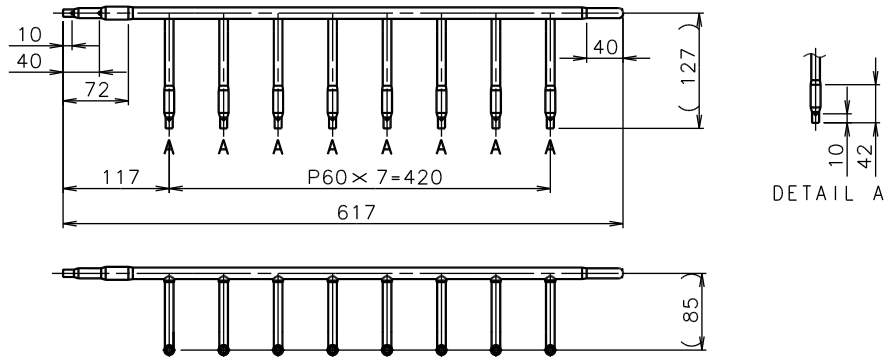
Dis-charge gas pipe	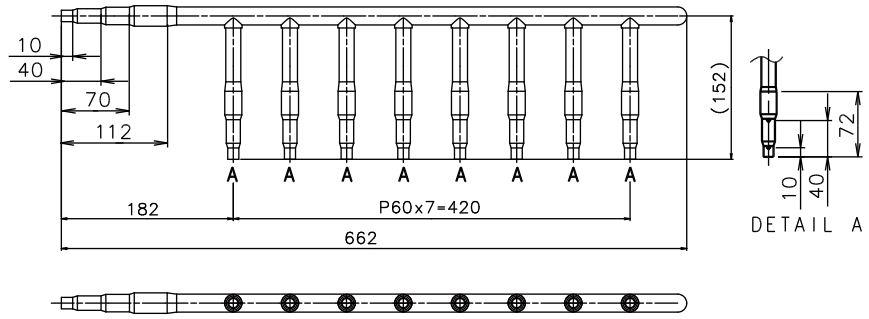
Suction gas pipe	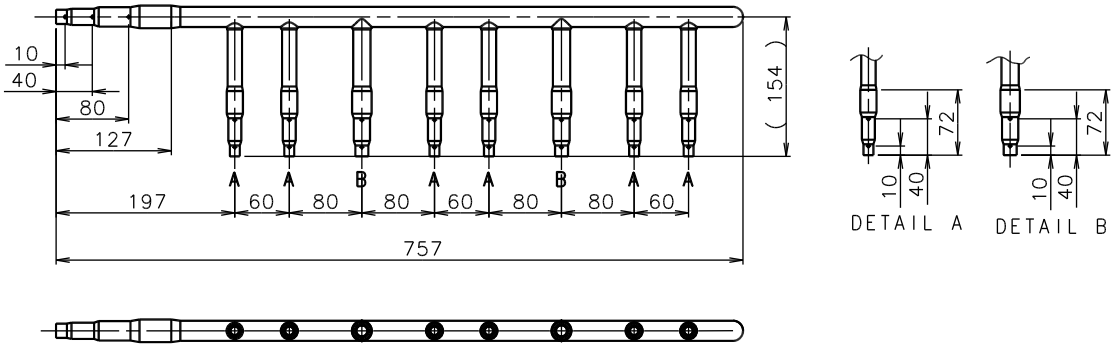

■ MODEL : UTP-J1806A

● Port diameters

Liquid pipe	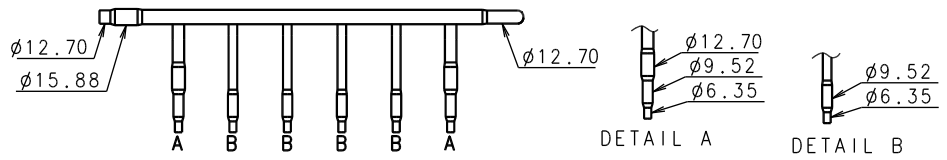
Dis-charge gas pipe	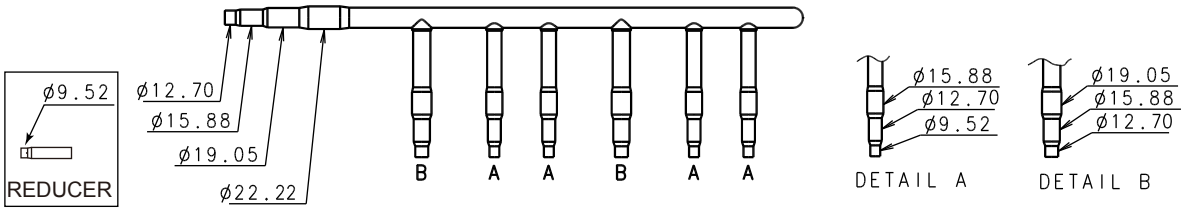
Suction gas pipe	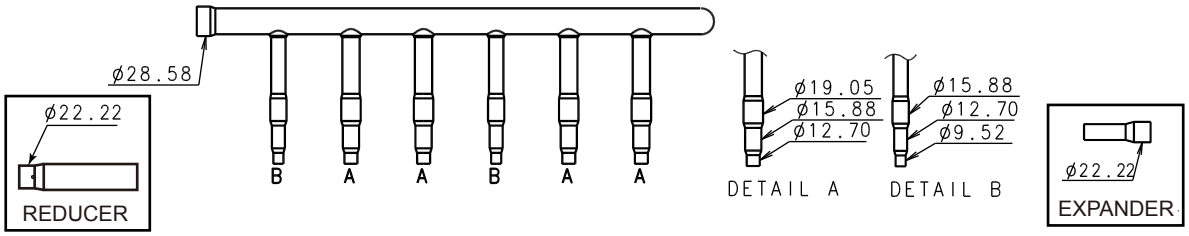

Closed pipe A	Closed pipe B	Closed pipe C	Closed pipe insulation
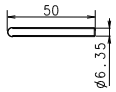 Q'ty 3	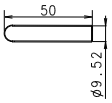 Q'ty 4	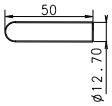 Q'ty 4	 Q'ty 9

● Heat insulation

Heat insulation	Q'ty	Application
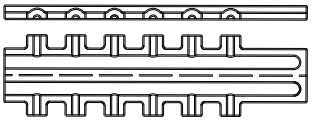	3	for Liquid pipe x1 for Discharge gas pipe x1 for Suction gas pipe x1

OPTIONAL PARTS

● Dimensions

Liquid pipe	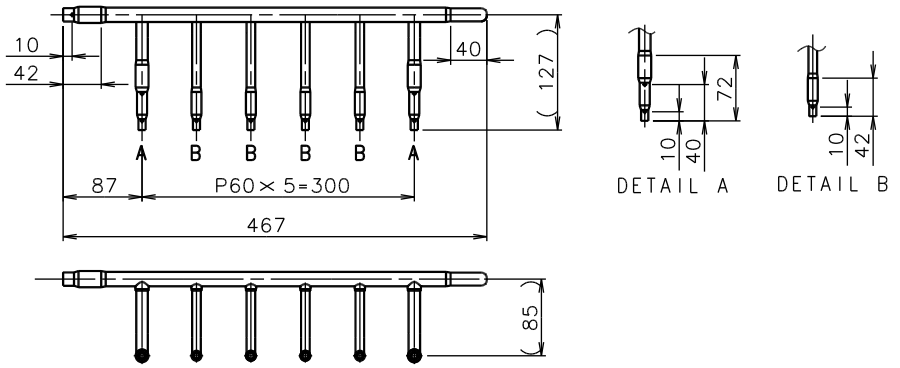
Dis-charge gas pipe	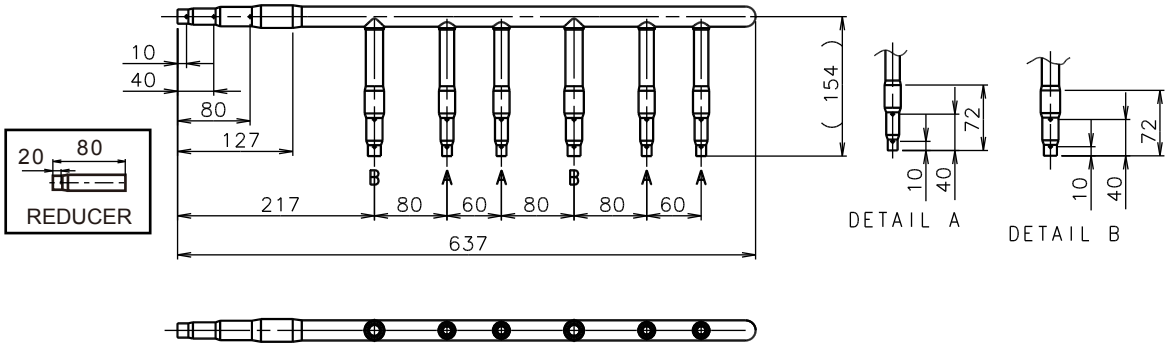
Suction gas pipe	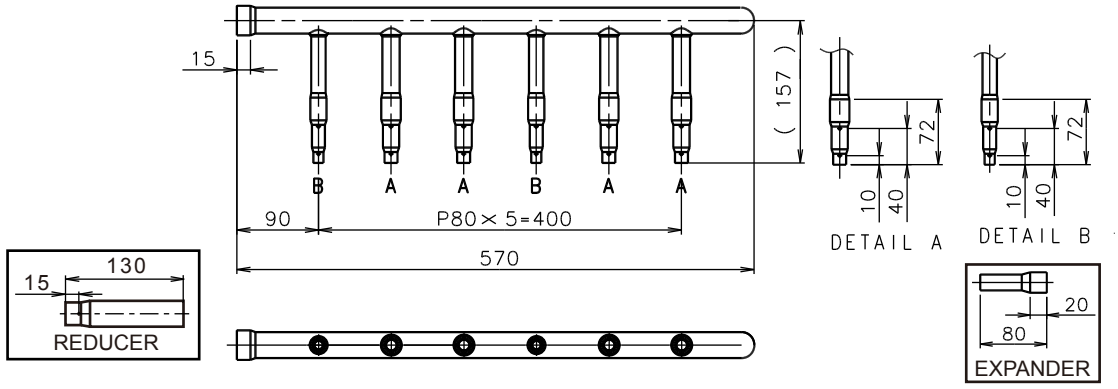

■ MODEL : UTP-J1808A

● Port diameters

Liquid pipe	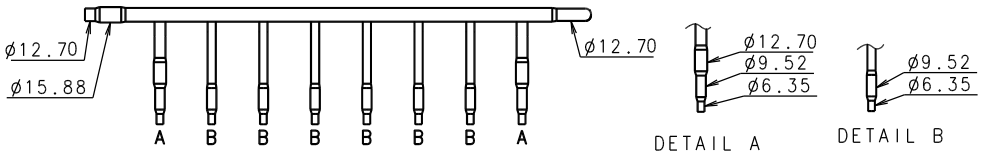
Dis-charge gas pipe	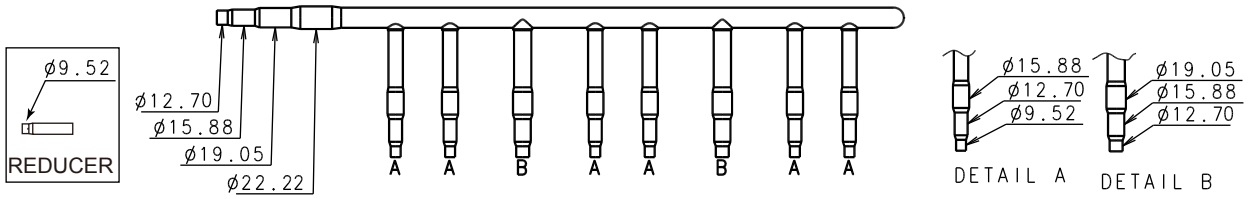
Suction gas pipe	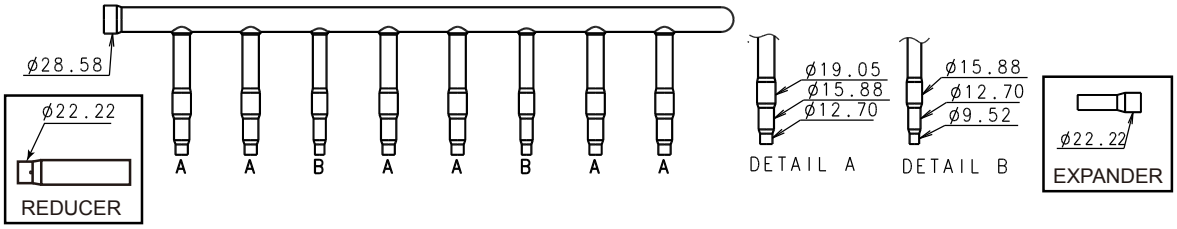

Closed pipe A	Closed pipe B	Closed pipe C	Closed pipe insulation
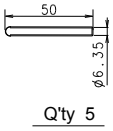 Q'ty 5	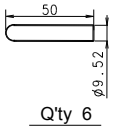 Q'ty 6	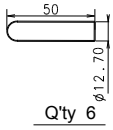 Q'ty 6	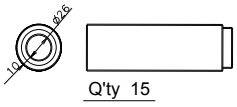 Q'ty 15

● Heat insulation

Heat insulation	Q'ty	Application
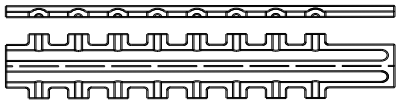	3	for Liquid pipe x1 for Discharge gas pipe x1 for Suction gas pipe x1

OPTIONAL PARTS

● Dimensions

Liquid pipe	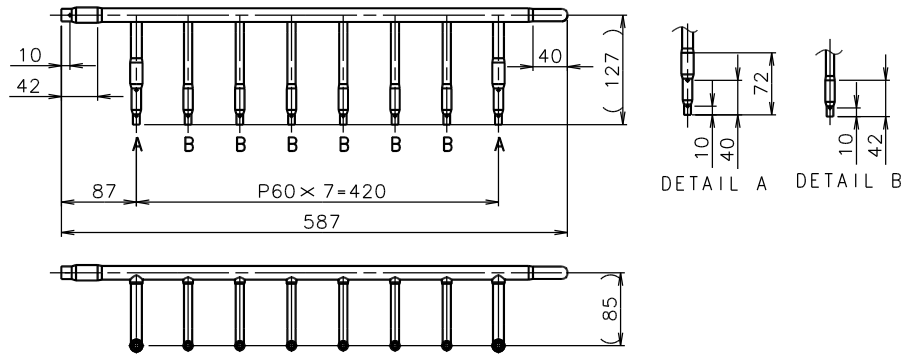
Dis-charge gas pipe	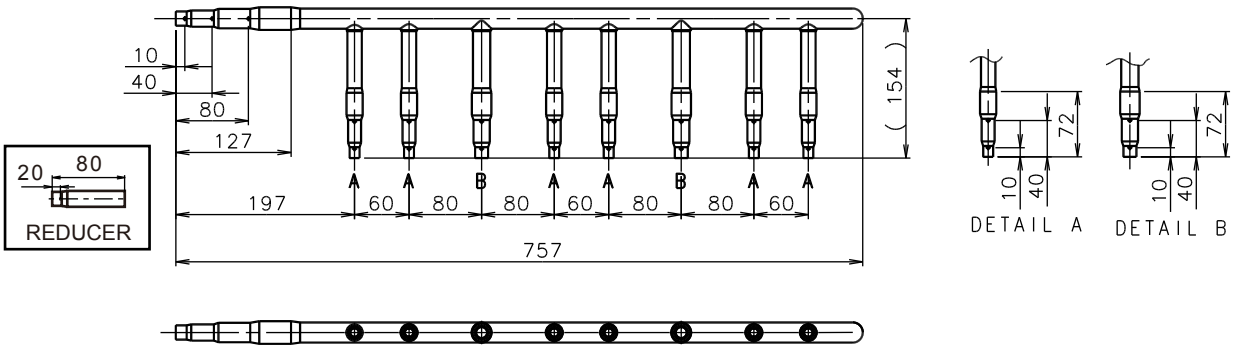
Suction gas pipe	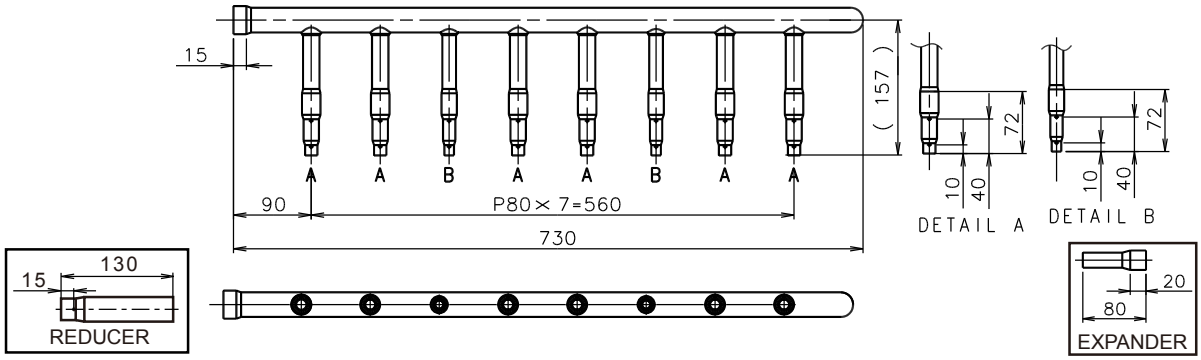

4. EV KIT

■ MODELS : UTR-EV09XB, UTR-EV14XB

(Unit : mm)

Model	Applicable model
UTR-EV09XB	AS∗E04GACH AS∗E07GACH AS∗E09GACH
UTR-EV14XB	AS∗E12GACH AS∗E14GACH

EV kit

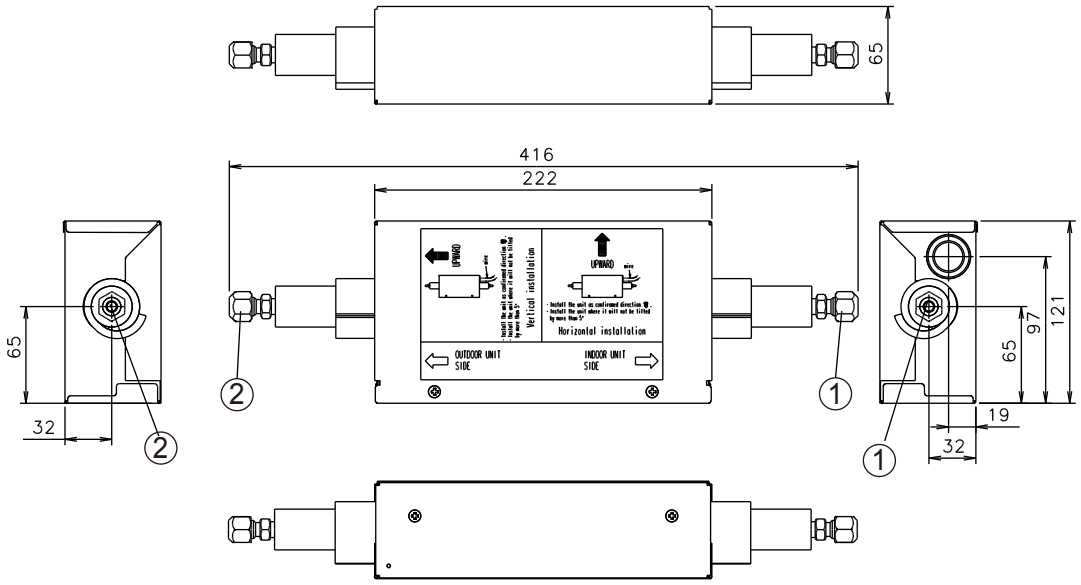

Hanger

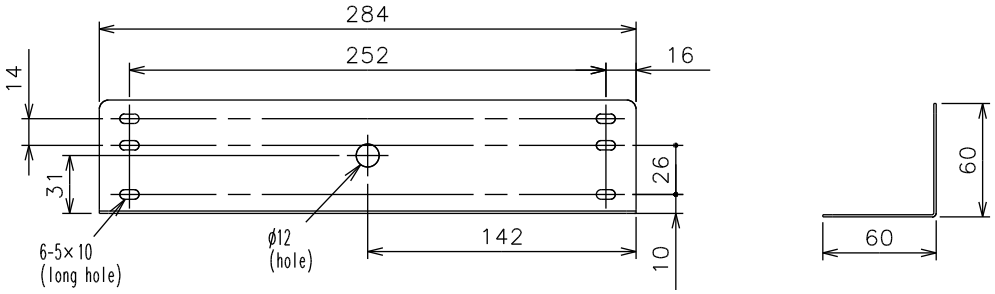

①	Refrigerant pipe flare connection (liquid pipe)	Indoor unit side	ø 6.35 mm
②		Outdoor unit side	ø 6.35 mm

Name and Shape		Q'ty	Name and Shape	Q'ty	Name and Shape	Q'ty	Name and Shape	Q'ty
EV kit 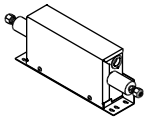		1	Coupler heat insulation 	2	Special nut A (M10) (large frange) 	1	Special nut B (M10) (small frange) 	1
Binder 	Large 5 Small 2		Screw 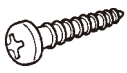	4	Tube 	1		

5. RB UNIT

5-1. SPECIFICATIONS

Model name				UTP-RX01AH	UTP-RX01BH	UTP-RX01CH	UTP-RX04BH
Power source				1 Phase 230V ~ 50Hz			
Available voltage range				198 to 264V			
Number of branches				1	1	1	4
Maximum number of connectable indoor units per branch				3	8	8	8
Maximum capacity of connectable indoor units(Q)			kW	Q ≤ 8.0	Q ≤ 18.0	Q ≤ 28.0	Q ≤ 56.0 *1
Maximum capacity of connectable indoor units per branch(Q)				Q ≤ 8.0	Q ≤ 18.0	Q ≤ 28.0	Q ≤ 18.0
Input power			W	17	24	31	96
Running current			A	0.11	0.16	0.22	0.64
Refrigerant type				R410A			
Dimensions (H x W x D)		Net	mm	198×298×268			260×658×428
		Gross		262×833×374			348×1250×775
Weight		Net	kg	7	7.5	8	31.5
		Gross		9.5	10.5	11	39.5
Connection pipe	Outdoor unit side	Suction gas pipe	mm	ø12.70	ø19.05	ø22.22	ø28.58
		Discharge gas pipe		ø9.52	ø12.70	ø19.05	ø22.22
		Liquid pipe		None			ø15.88
	Indoor unit side	Gas pipe		ø12.70	ø19.05	ø22.22	ø19.05
		Liquid pipe		None			ø9.52
	Method			Brazing			
Operation range			°C	-15 to 46			
			%RH	80 or less			

*1: In case of two RB units connected in series (total 8-branches), maximum capacity of connectable indoor units is up to 56.0kW.

OPTIONAL PARTS

5-2. DIMENSIONS

■ MODELS : UTP-RX01AH, UTP-RX01BH, UTP-RX01CH

Unit : mm

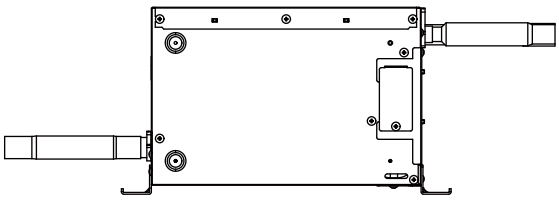

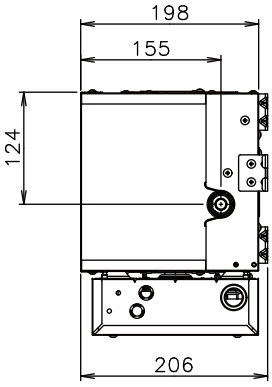

Indoor unit side

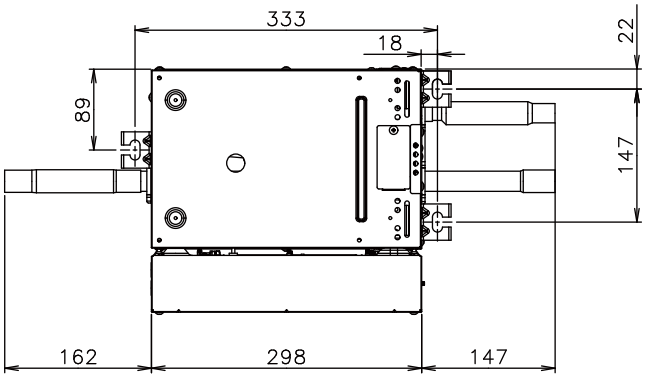

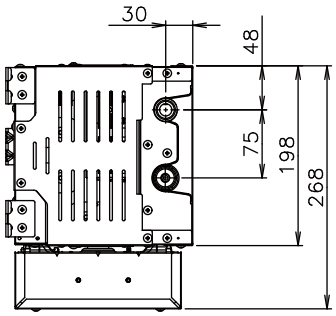

Outdoor unit side

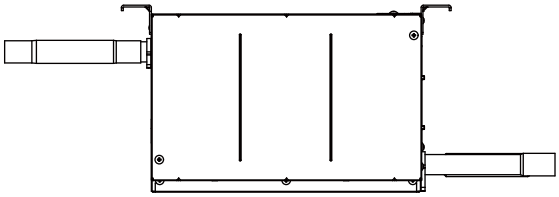

Ceiling hanging

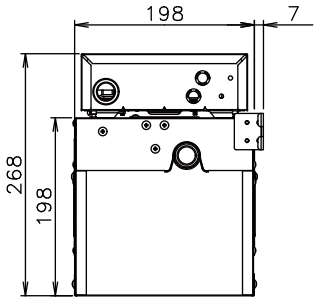

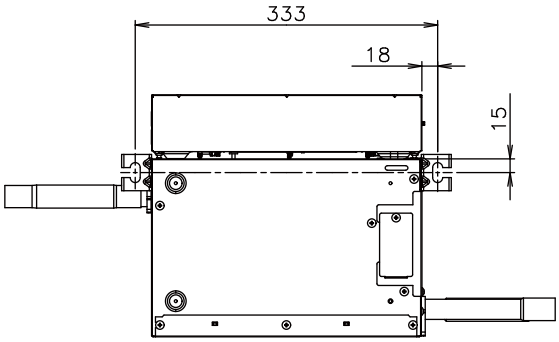

Wall hanging

■ MODEL : UTP-RX04BH

Unit : mm

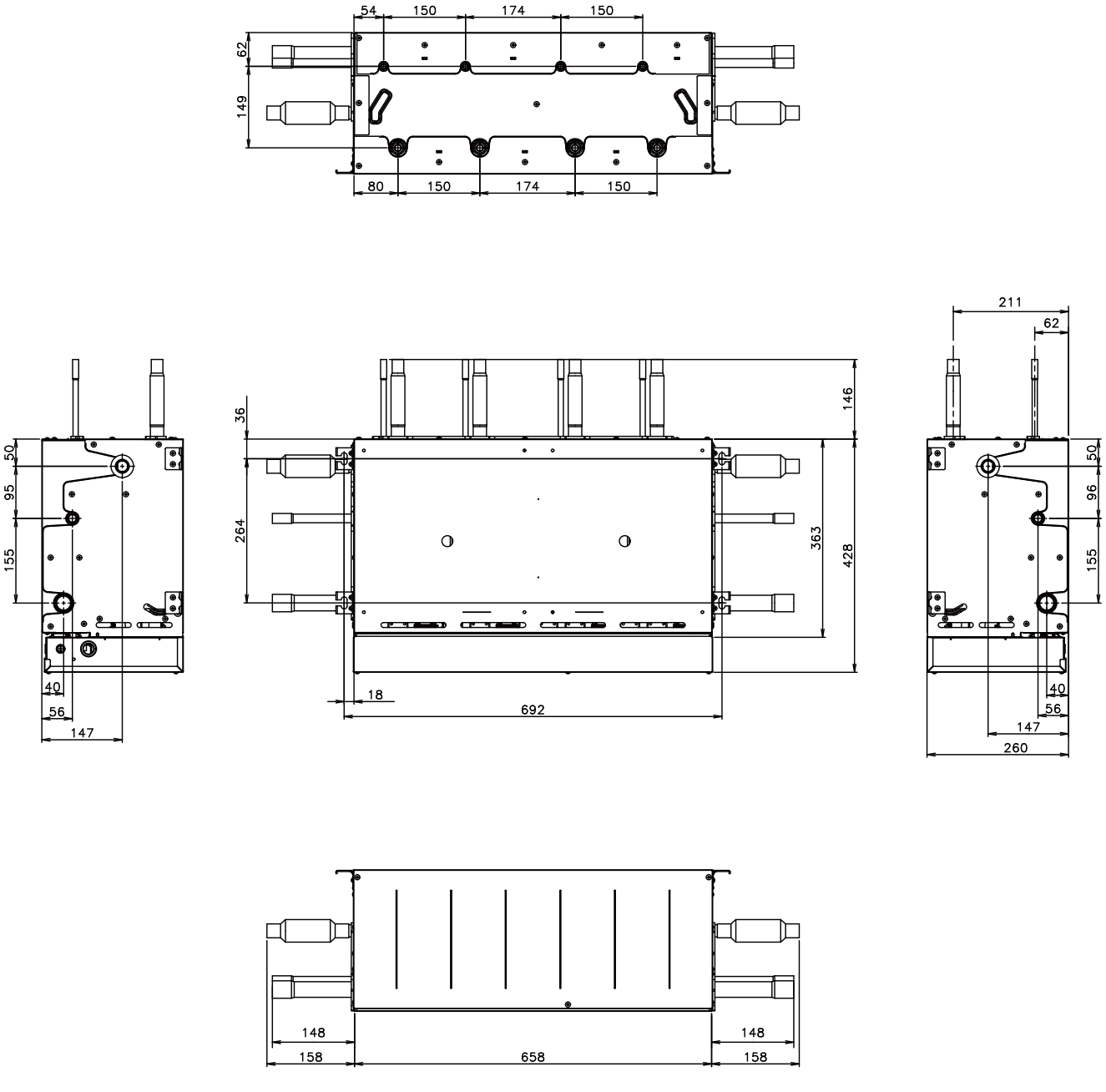

OPTIONAL PARTS

5-3. INSTALLATION

- Control box which is a part of RB units can be also changed the position depending on installation condition at each side of RB units
- Please be sure to prepare Service access in control box side.
- Since the sound of refrigerant flow may be felt as an unusual sound, please do not install in the underpart of the roof, such as a bedroom which sound worries.

■ MODELS : UTP-RX01AH, UTP-RX01BH, UTP-RX01CH

● Ceiling installation

Unit : mm

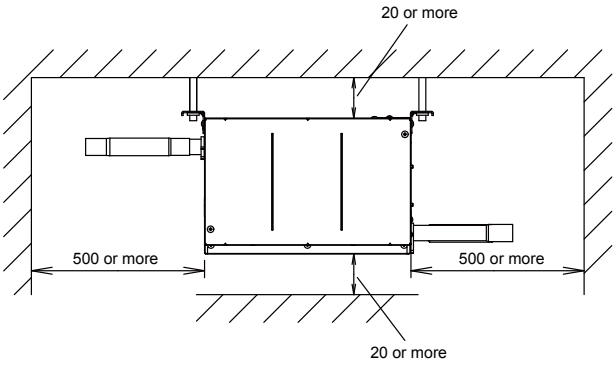

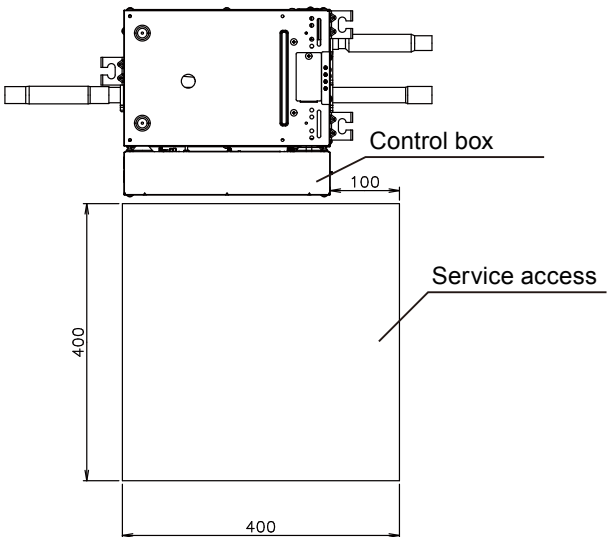

● Wall installation

E.g.: If installing a duct model vertically.

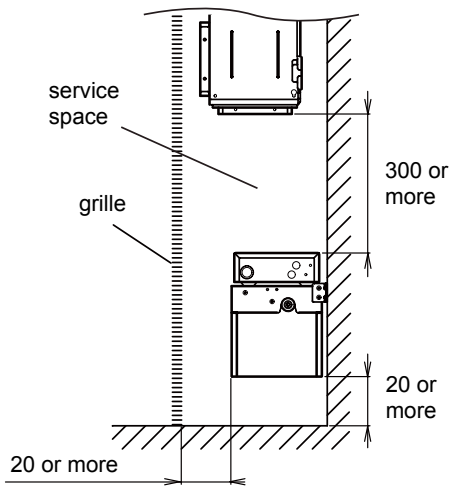

OPTIONAL PARTS

■ MODEL : UTP-RX04BH

● Ceiling installation

Unit : mm

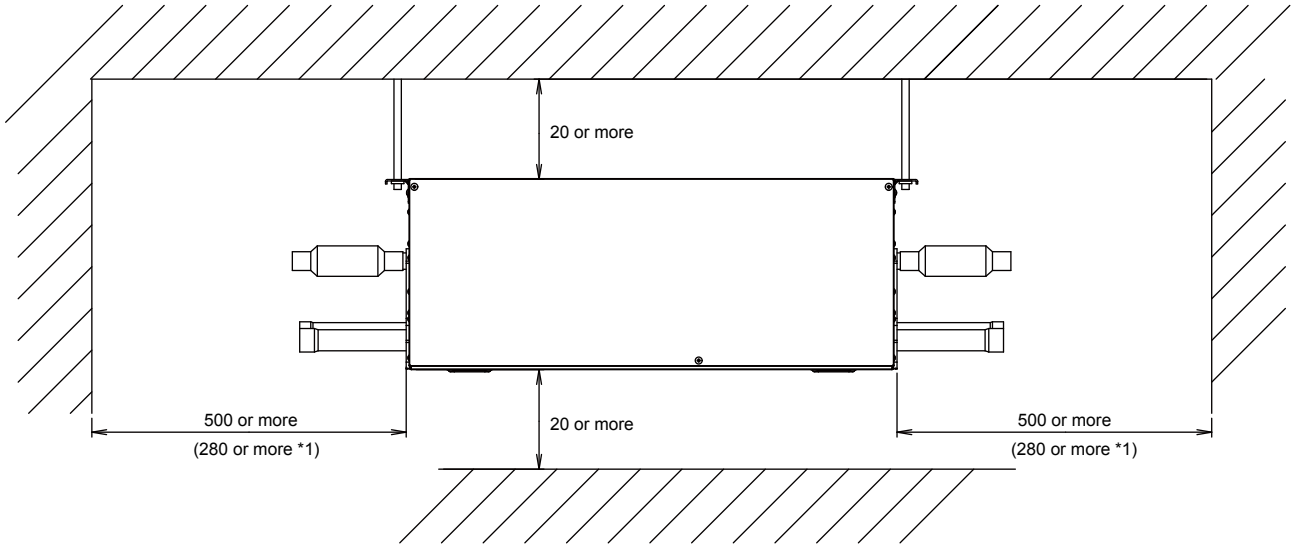

*1: When piping is not connected

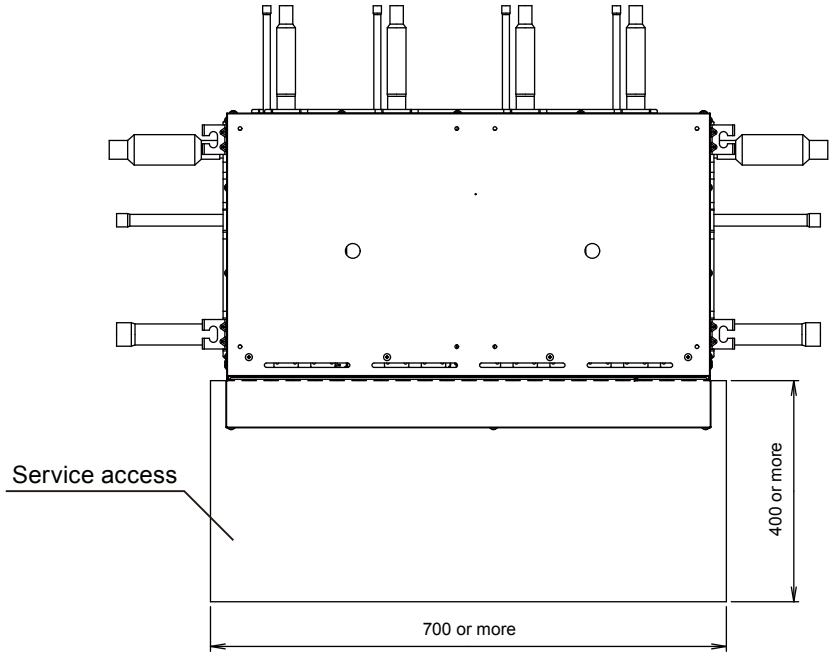

OPTIONAL PARTS

5-4. REFRIGERANT CIRCUIT

■ MODEL : UTP-RX01AH

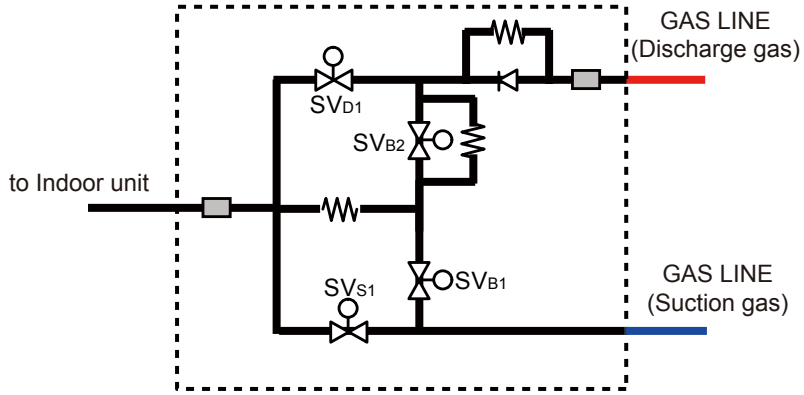

■ MODEL : UTP-RX01BH

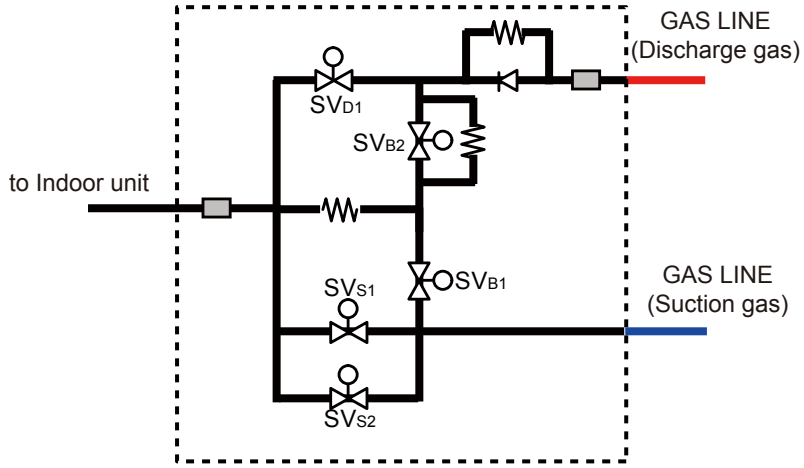

■ MODEL : UTP-RX01CH

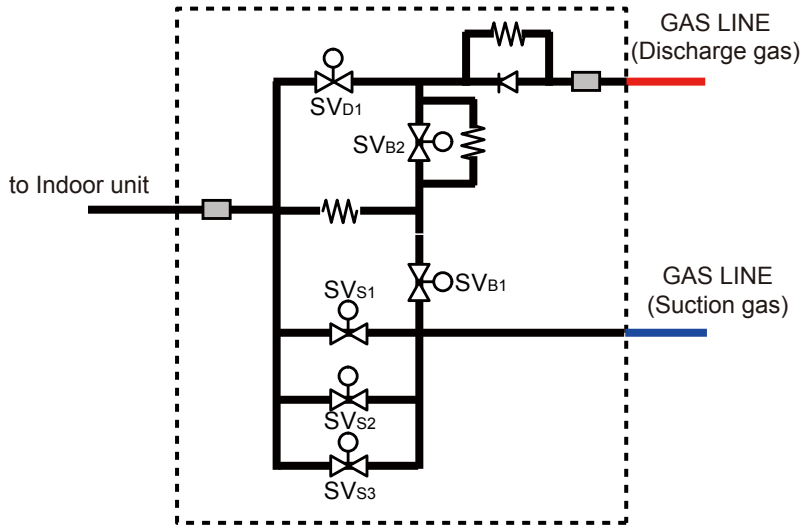

■ MODEL : UTP-RX04BH

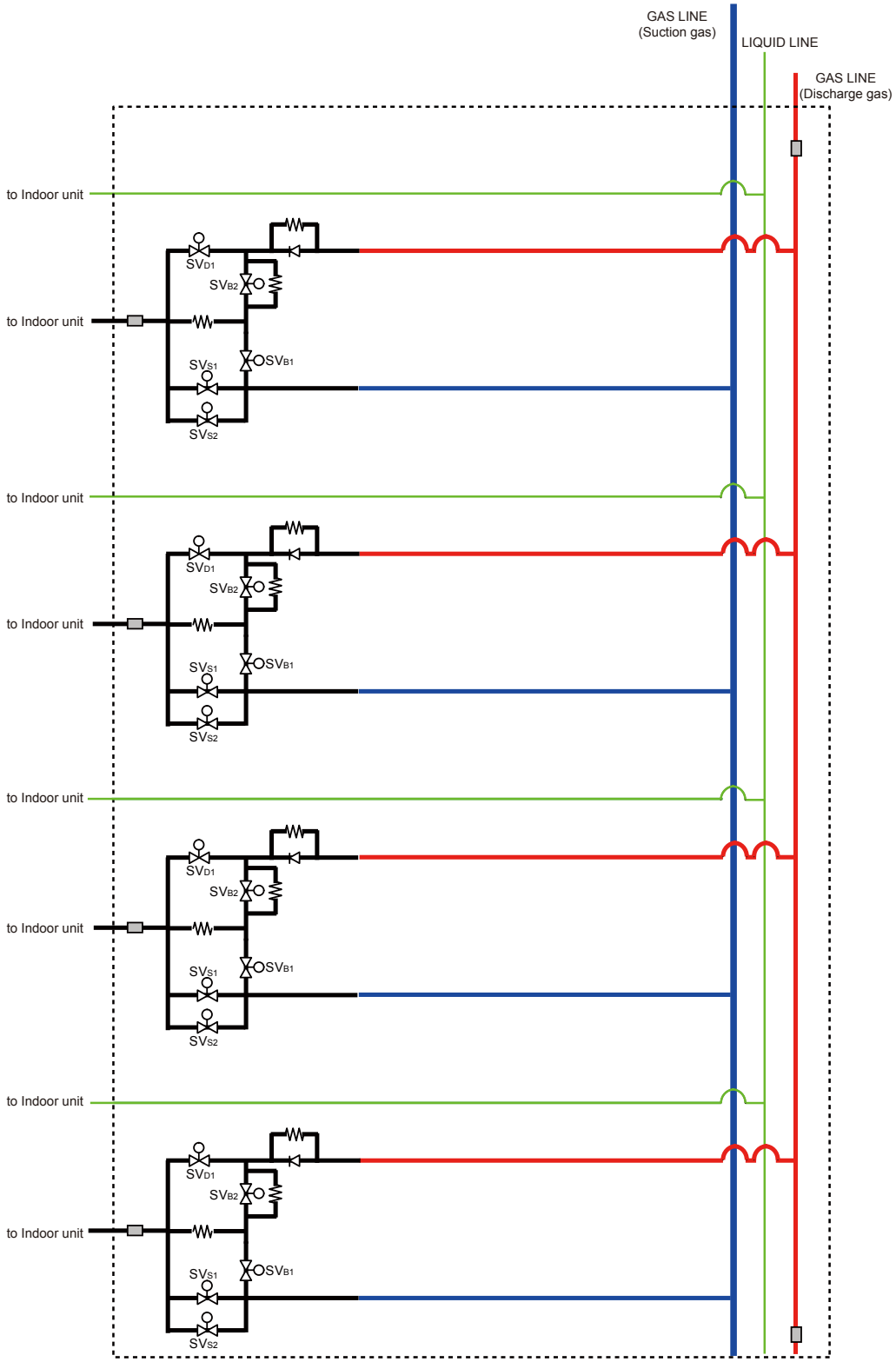

■ SYMBOL DESCRIPTION

MARK	DESCRIPTION
SV_{S1}	Solenoid valve (Suction 1)
SV_{S2}	Solenoid valve (Suction 2)
SV_{S3}	Solenoid valve (Suction 3)
SV_{B1}	Solenoid valve (Bypass 1)
SV_{B2}	Solenoid valve (Bypass 2)
SV_{D1}	Solenoid valve (Discharge 1)

OPTIONAL PARTS

5-5. WIRING DIAGRAMS

■ MODEL : UTP-RX01AH

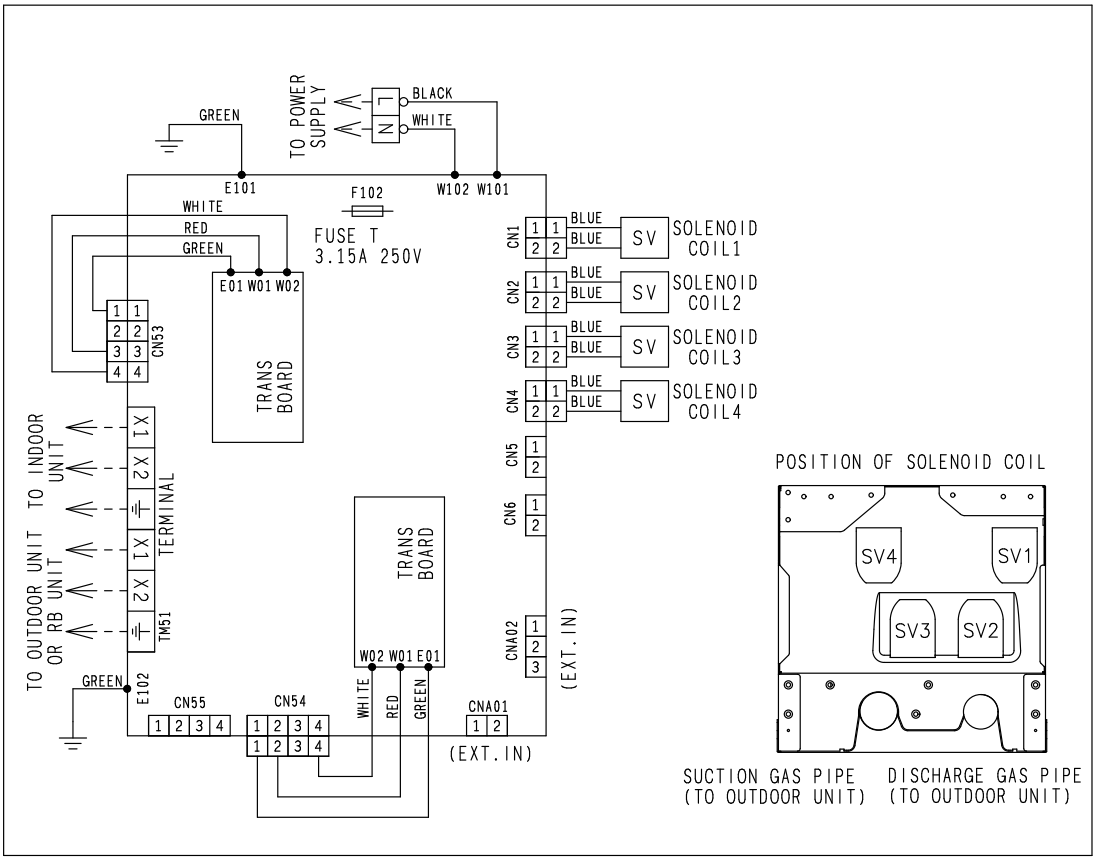

■ MODEL : UTP-RX01BH

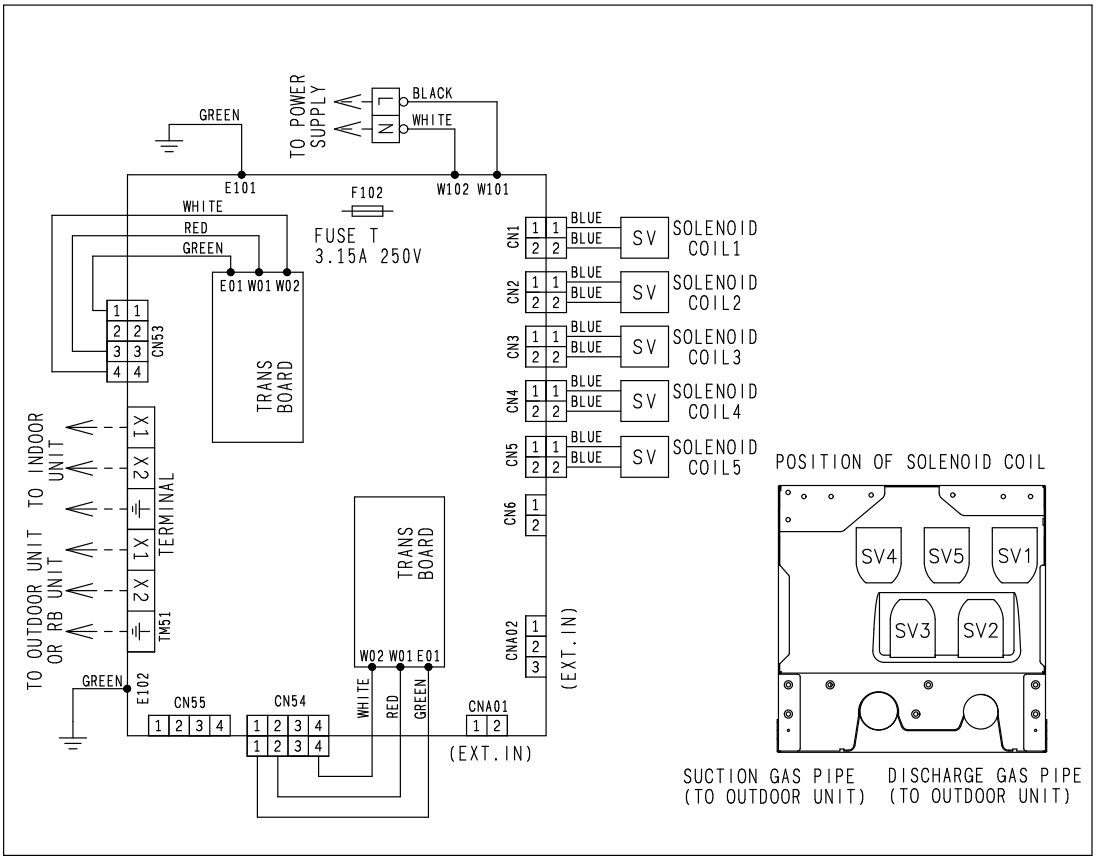

OPTIONAL PARTS

■ MODEL : UTP-RX01CH

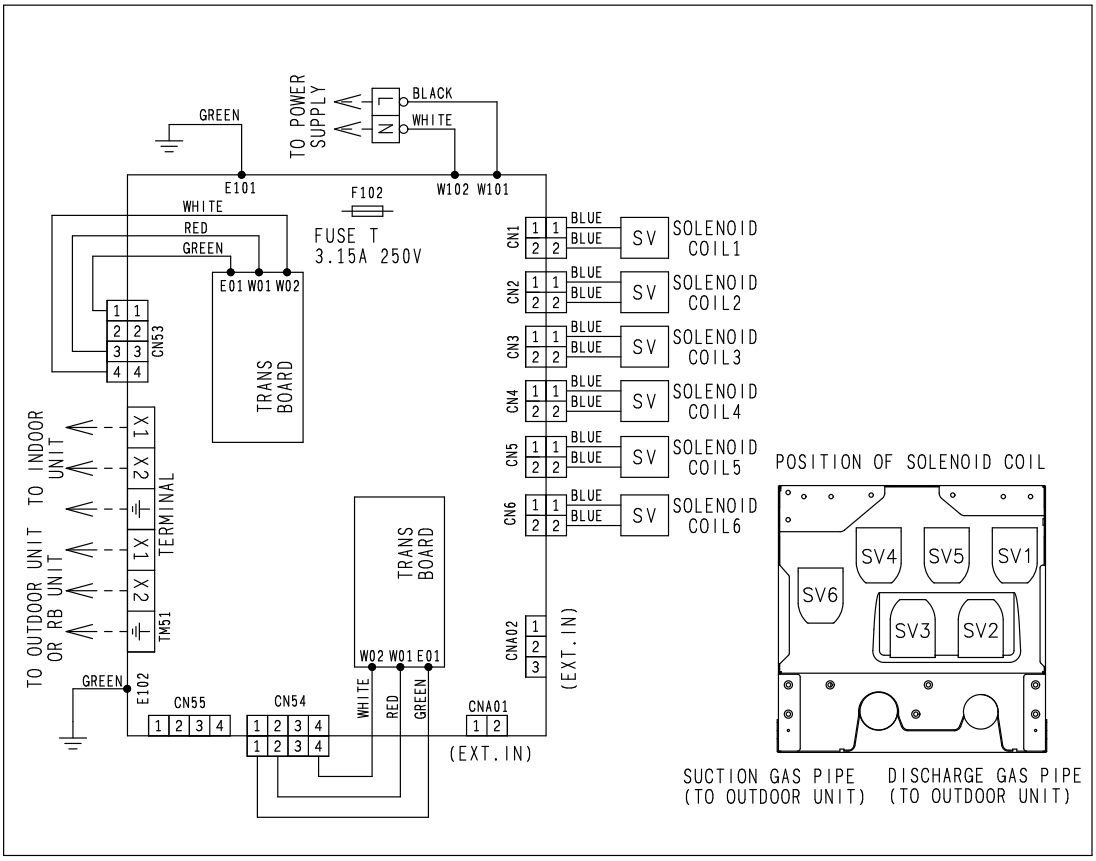

■ MODEL : UTP-RX04BH

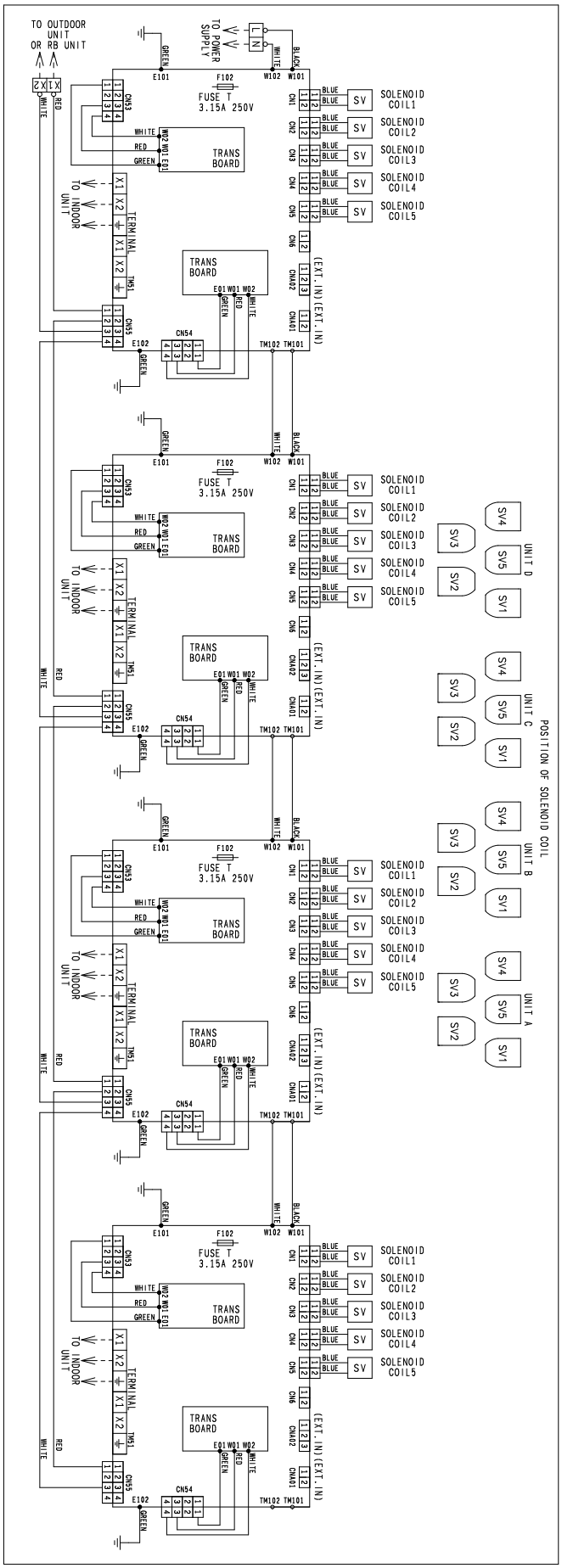

OPTIONAL PARTS

5-6. ELECTRIC CHARACTERISTICS

Model	Voltage (V)	Frequency (Hz)	MCA (A)	MFA (A)
UTP-RX01AH	230	50	0.13	20
UTP-RX01BH			0.19	
UTP-RX01CH			0.26	
UTP-RX04BH			0.76	

MCA : Min Circuit Amps = Max Operating Current (Full Load).

MFA : Main Fuse (Circuit breaker) Amps.

OPTIONAL PARTS

5-7. SAFETY DEVICES

Model	PCB fuse
UTP-RX01AH	250V x 1 3.15A x1
UTP-RX01BH	250V x 1 3.15A x1
UTP-RX01CH	250V x 1 3.15A x1
UTP-RX04BH	250V x 4 3.15A x 4

OPTIONAL PARTS

6. CONTROLLER

■ SYSTEM CONTROLLER (Software)

● UTY-APGX

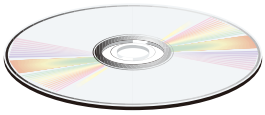



- DVD-ROM
- Software protection key

●Maximum 1600 groups
/ 1600 indoor units can be controlled
●Monitoring status of operation

■ TOUCH PANEL CONTROLLER

● UTY-DTG∗



●Maximum 400 groups
/ 400 indoor units can be controlled
●With yearly timer

■ CENTRAL REMOTE CONTROLLER

● UTY-DCG∗



●Maximum 16 groups
/ 100 indoor units can be controlled
●With weekly timer

■ GROUP REMOTE CONTROLLER

● UTY-CGG∗

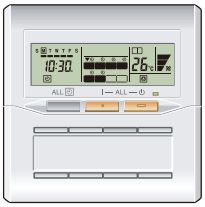

●Maximum 8 remote controller groups
(128 indoor units)
●With weekly timer

■ WIRED REMOTE CONTROLLER (Touch panel)

● UTY-RNR∗

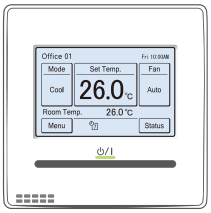

●Largest LCD touch panel
●On / Off weekly timer

■ WIRED REMOTE CONTROLLER

● UTY-RNK∗

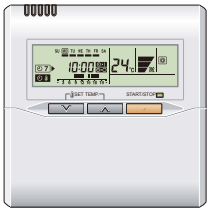

●On / Off weekly timer
●Built in thermo sensor

■ SIMPLE REMOTE CONTROLLER

● UTY-RSK∗
With Operation mode



● UTY-RHK∗
Without Operation mode



●Background light
●Easy operation

■ WIRELESS REMOTE CONTROLLER

● UTY-LNH∗



●On / Off sleep, program timer
●Easy operation

OPTIONAL PARTS

7. ADAPTOR / CONVERTOR / MAINTENANCE

■ NETWORK CONVERTOR

● UTY-VGGXZ1



● (Split system convertor)
● (Group remote convertor)

■ NETWORK CONVERTOR for LONWORKS®

● UTY-VLGX

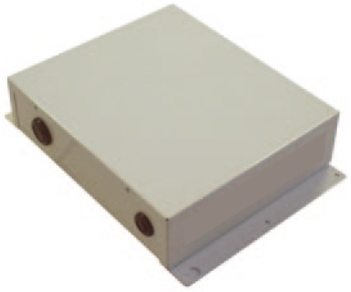

● LON / LON Convertor

■ SIGNAL AMPLIFIER

● UTY-VSGXZ1

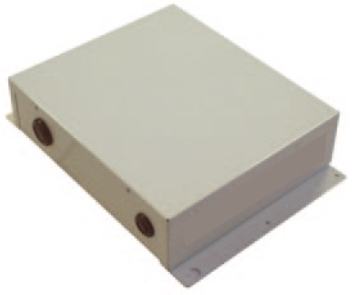

If the total length of transmission line exceeds 500m, or the number of units exceeds 64 units, Signal Amplifier will be necessary to use

■ EXTERNAL SWITCH CONTROLLER

● UTY-TEKX



Air conditioner switching can be controlled by connecting other sensor switches

■ BACnet® GATEWAY (Software)

● UTY-ABGX

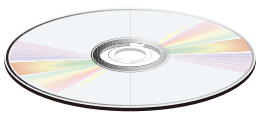



● DVD-ROM
● Software protection key

● VRF/BMS Convertor

OPTIONAL PARTS

■ SERVICE TOOL

● UTY-ASGX

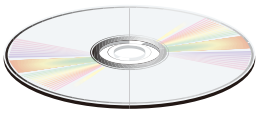



- DVD-ROM
- Software protection key

■ WEB MONITORING TOOL

● UTY-AMGX

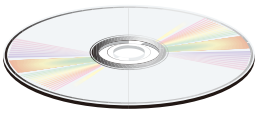



- DVD-ROM
- Software protection key

8. CASSETTE GRILLE

● UTG-UF∗C-W

- For Compact Cassette type

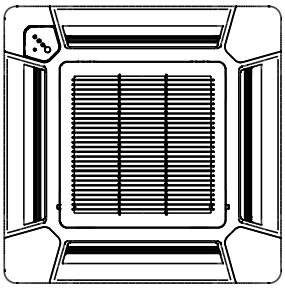

∗IR receiver attached

● UTG-UG∗A-W

- For Cassette type

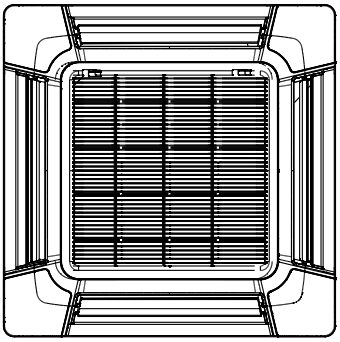

9. OTHERS

9-1. PARTS LIST

		Air outlet shutter plate		Panel spacer	Wide panel	Insulation kit for high humidity		
Type	Model name	UTR-YDZB	UTR-YDZC	UTG-BGYA-W	UTG-AGYA-W	UTZ-KXGA	UTZ-KXGB	UTZ-KXGC
Compact Cassette	AUXB04GALH	O						O
	AUXB07GALH	O						O
	AUXB09GALH	O						O
	AUXB12GALH	O						O
	AUXB14GALH	O						O
	AUXB18GALH	O						O
	AUXB24GALH	O						O
Cassette	AUXD18GALH		O	O	O		O	
	AUXD24GALH		O	O	O		O	
	AUXA30GALH		O	O	O	O		
	AUXA36GALH		O	O	O	O		
	AUXA45GALH		O	O	O	O		
	AUXA54GALH		O	O	O	O		
Low Static Pressure Duct / Concealed Floor	ARXB07GALH							
	ARXB09GALH							
	ARXB12GALH							
	ARXB14GALH							
	ARXB18GALH							
Slim Duct / Slim Concealed Floor	ARXD04GALH							
	ARXD07GALH							
	ARXD09GALH							
	ARXD12GALH							
	ARXD14GALH							
	ARXD18GALH							
	ARXD24GALH							
Medium Static Pressure Duct	ARXA24GBLH							
	ARXA30GBLH							
	ARXA36GBLH							
	ARXA45GBLH							
High Static Pressure Duct	ARXC36GATH							
	ARXC45GATH							
	ARXC60GATH							
	ARXC72GATH							
	ARXC90GATH							
Floor / Ceiling	AB*A12GATH							
	AB*A14GATH							
	AB*A18GATH							
	AB*A24GATH							
Ceiling	AB*A30GATH							
	AB*A36GATH							
	AB*A45GATH							
	AB*A54GATH							
Wall Mounted	AS*A04GACH							
	AS*A07GACH							
	AS*A09GACH							
	AS*A12GACH							
	AS*A14GACH							
Wall Mounted (EEV external)	AS*E04GACH							
	AS*E07GACH							
	AS*E09GACH							
	AS*E12GACH							
	AS*E14GACH							
Wall Mounted	AS*A18GACH							
	AS*A24GACH							
	AS*A30GACH							

OPTIONAL PARTS

		Fresh air intake kit		IR receiver unit		Auto louver grille kit		
Type	Model name	UTZ-VXAA	UTZ-VXGA	UTY-LRH*B1	UTB-*WC	UTD-G*SA	UTD-G*SB	UTD-G*SC
Compact Cassette	AUXB04GALH	O						
	AUXB07GALH	O						
	AUXB09GALH	O						
	AUXB12GALH	O						
	AUXB14GALH	O						
	AUXB18GALH	O						
	AUXB24GALH	O						
Cassette	AUXD18GALH		O	O				
	AUXD24GALH		O	O				
	AUXA30GALH		O	O				
	AUXA36GALH		O	O				
	AUXA45GALH		O	O				
	AUXA54GALH		O	O				
Low Static Pressure Duct / Concealed Floor	ARXB07GALH				O			
	ARXB09GALH				O			
	ARXB12GALH				O			
	ARXB14GALH				O			
	ARXB18GALH				O			
Slim Duct / Slim Concealed Floor	ARXD04GALH				O	O		
	ARXD07GALH				O	O		
	ARXD09GALH				O	O		
	ARXD12GALH				O	O		
	ARXD14GALH				O	O		
	ARXD18GALH				O		O	
	ARXD24GALH				O			O
Medium Static Pressure Duct	ARXA24GBLH				O			
	ARXA30GBLH				O			
	ARXA36GBLH				O			
	ARXA45GBLH				O			
High Static Pressure Duct	ARXC36GATH				O			
	ARXC45GATH				O			
	ARXC60GATH				O			
	ARXC72GATH				O			
	ARXC90GATH				O			
Floor / Ceiling	AB*A12GATH							
	AB*A14GATH							
	AB*A18GATH							
	AB*A24GATH							
Ceiling	AB*A30GATH							
	AB*A36GATH							
	AB*A45GATH							
	AB*A54GATH							
Wall Mounted	AS*A04GACH							
	AS*A07GACH							
	AS*A09GACH							
	AS*A12GACH							
	AS*A14GACH							
Wall Mounted (EEV external)	AS*E04GACH							
	AS*E07GACH							
	AS*E09GACH							
	AS*E12GACH							
	AS*E14GACH							
Wall Mounted	AS*A18GACH							
	AS*A24GACH							
	AS*A30GACH							

OPTIONAL PARTS

		Long life filter		Flange		Drain pump unit			Remote sensor unit
Type	Model name	UTD-LF25NA	UTD-LF60KA	UTD-SF045T	UTD-RF204	UTZ-PX1BBA	UTZ-PX1NBA	UTR-DPB24T	UTY-XSZX
Compact Cassette	AUXB04GALH								
	AUXB07GALH								
	AUXB09GALH								
	AUXB12GALH								
	AUXB14GALH								
	AUXB18GALH								
	AUXB24GALH								
Cassette	AUXD18GALH								
	AUXD24GALH								
	AUXA30GALH								
	AUXA36GALH								
	AUXA45GALH								
	AUXA54GALH								
Low Static Pressure Duct / Concealed Floor	ARXB07GALH					O			O
	ARXB09GALH					O			O
	ARXB12GALH					O			O
	ARXB14GALH					O			O
	ARXB18GALH					O			O
Slim Duct / Slim Concealed Floor	ARXD04GALH								O
	ARXD07GALH								O
	ARXD09GALH								O
	ARXD12GALH								O
	ARXD14GALH								O
	ARXD18GALH								O
	ARXD24GALH								O
Medium Static Pressure Duct	ARXA24GBLH	O		O	O		O		O
	ARXA30GBLH	O		O	O		O		O
	ARXA36GBLH	O		O	O		O		O
	ARXA45GBLH	O		O	O		O		O
High Static Pressure Duct	ARXC36GATH		O						O
	ARXC45GATH		O						O
	ARXC60GATH		O						O
	ARXC72GATH								O
	ARXC90GATH								O
Floor / Ceiling	AB*A12GATH								
	AB*A14GATH								
	AB*A18GATH								
	AB*A24GATH								
Ceiling	AB*A30GATH				O			O	
	AB*A36GATH				O			O	
	AB*A45GATH				O			O	
	AB*A54GATH				O			O	
Wall Mounted	AS*A04GACH								
	AS*A07GACH								
	AS*A09GACH								
	AS*A12GACH								
	AS*A14GACH								
Wall Mounted (EEV external)	AS*E04GACH								
	AS*E07GACH								
	AS*E09GACH								
	AS*E12GACH								
	AS*E14GACH								
Wall Mounted	AS*A18GACH								
	AS*A24GACH								
	AS*A30GACH								

OPTIONAL PARTS

■ AIR OUTLET SHUTTER PLATE

- UTR-YDZB
  - For Compact Cassette type



■ AIR OUTLET SHUTTER PLATE

- UTR-YDZC
  - For Cassette type



■ PANEL SPACER

- UTG-BGYA-W
  - For Cassette type

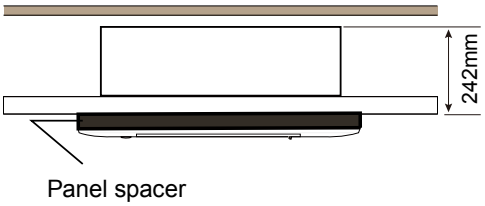

■ WIDE PANEL

- UTG-AGYA-W
  - For Cassette type

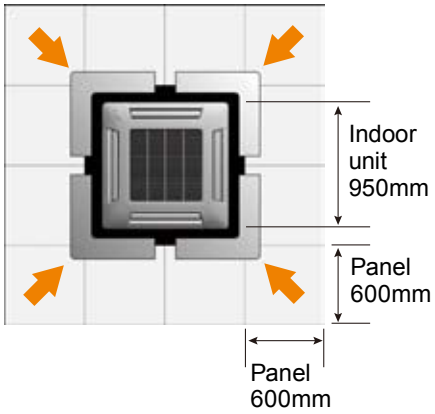

■ INSULATION KIT for High Humidity

- UTZ-KXGA
  - For Cassette type (30-54 models)
- UTZ-KXGB
  - For Cassette type (18-24 models)
- UTZ-KXGC
  - For Compact Cassette type

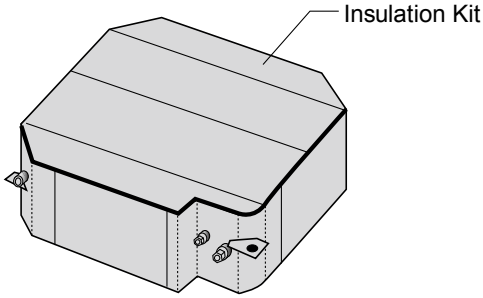

■ FRESH AIR INTAKE KIT

- UTZ-VXAA
  - For Compact Cassette type



■ FRESH AIR INTAKE KIT

- UTZ-VXGA
  - For Cassette type



■ IR RECEIVER UNIT

- UTY-LRH∗B1
  - For Cassette type



The wireless remote controller (Model: UTY-LNH∗) is necessary separately

■ IR RECEIVER UNIT

- UTB-∗WC
  - For All Duct type



The wireless remote controller (Model: UTY-LNH∗) is necessary separately

■ AUTO LOUVER GRILLE KIT

- UTD-GXSA-W
  For Slim duct (07-14 models)
- UTD-GXSB-W
  For Slim duct (18 model)
- UTD-GXSC-W
  For Slim duct (24 model)



■ LONG-LIFE FILTER

- UTD-LF25NA
  - For Medium Static Pressure Duct type

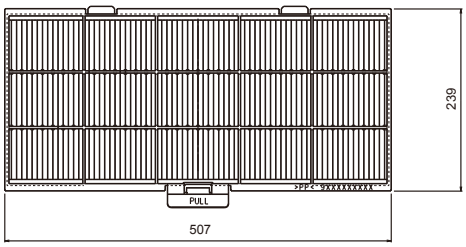

■ LONG-LIFE FILTER

- UTD-LF60KA
  - For High Static Pressure Duct type
    (36, 45, 54, 60 models)

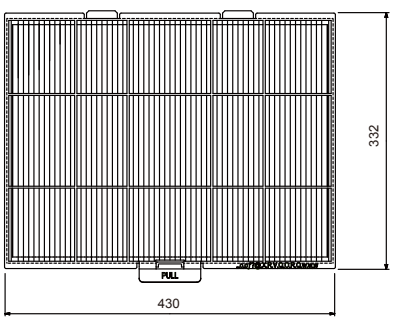

OPTIONAL PARTS

■ FLANGE (Square)

- UTD-SF045T
  - For Medium Static Pressure Duct type

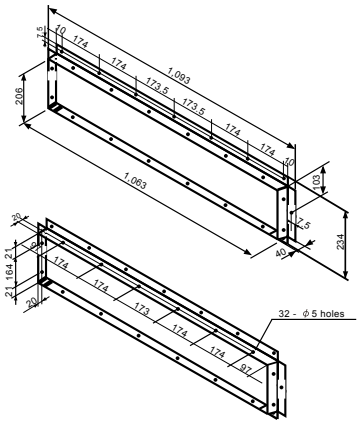

■ FLANGE (Round)

- UTD-RF204
  - For Medium Static Pressure Duct type

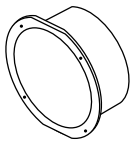

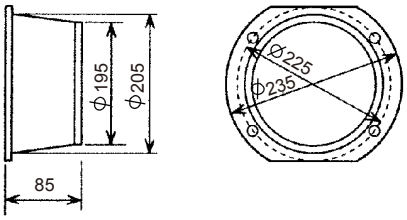

■ DRAIN PUMP UNIT

- UTZ-PX1BBA
  - For Low Static Pressure Duct/Concealed Floor type
- UTZ-PX1NBA
  - For Medium Static Pressure Duct type



■ DRAIN PUMP UNIT

- UTR-DPB24T
  - For Ceiling type

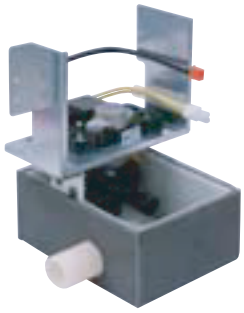

■ REMOTE SENSOR UNIT

- UTY-XSZX

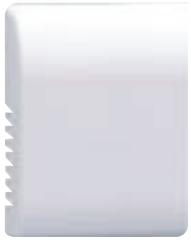

New amenity space can be offered by installing the Remote sensor

OPTIONAL PARTS

10. OPTIONAL PARTS INSTALLATION

10-1. DRAIN PUMP UNIT

■ MODEL : UTZ-PX1BBA

● Specifications

	Unit	Specifications
Height of drain up	mm	Maximum 1000
Power source	-	220-240V, 50/60Hz
Input Power (230V, 50/60Hz)	W	12 / 10.8
Current (230V, 50/60Hz)	mA	114 / 92
Dimensions (H x W x D)	mm	176 x 178 x 154
Weight	kg	2.5
Connection pipe diameter	-	VP25 (I.D.25mm, O.D.32mm)
Direction of pipe connection *1	-	360°
Angle of pipe connection *2	-	0° (Horizontal)-90° (Vertical)
Control method	-	Control board of indoor unit
safety device	-	Float switch, Thermal fuse

*1 : Direction of pipe connection

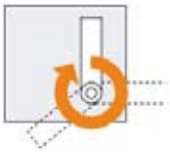

*2 : Angle of pipe connection

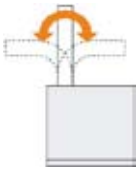

● Application indoor units

Type	Model name
Low Static Pressure Duct / Concealed Floor	ARXB07GALH, ARXB09GALH, ARXB12GALH, ARXB14GALH, ARXB18GALH

● Mounting position

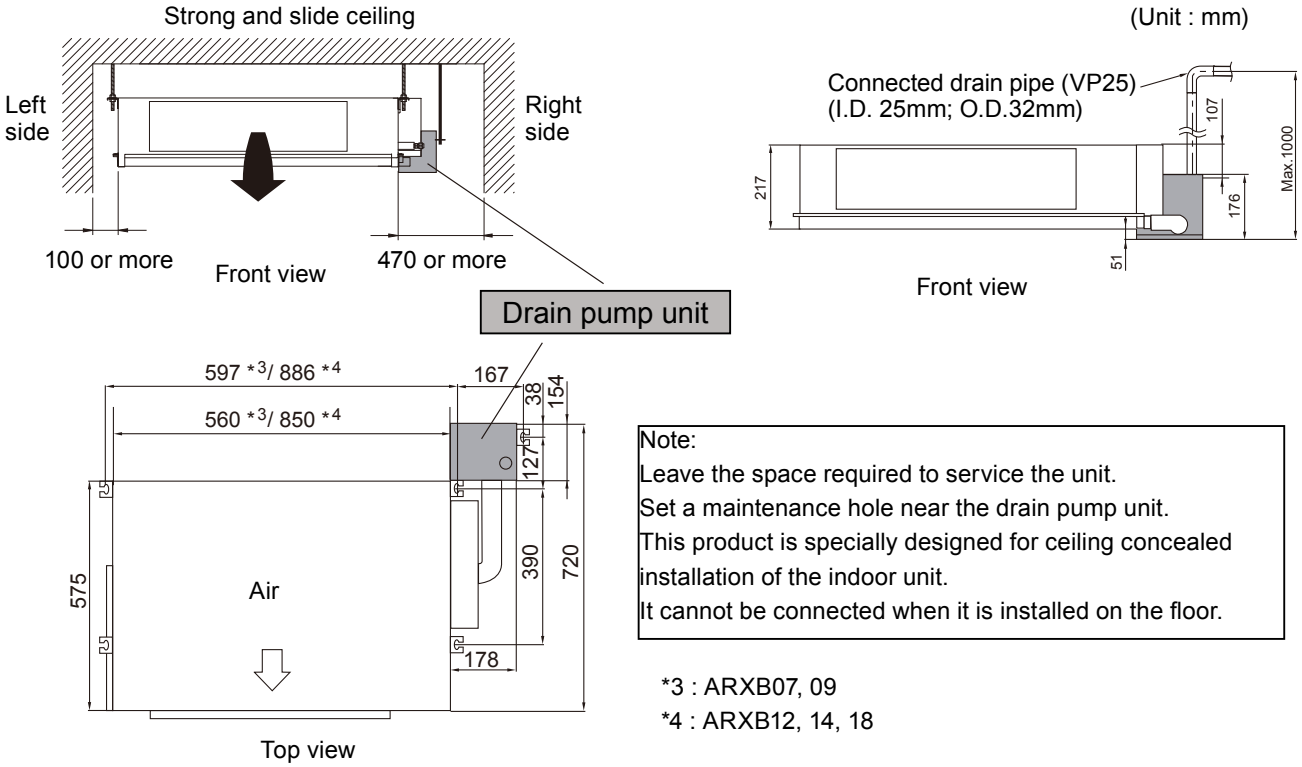

Note:
Leave the space required to service the unit.
Set a maintenance hole near the drain pump unit.
This product is specially designed for ceiling concealed installation of the indoor unit.
It cannot be connected when it is installed on the floor.

*3 : ARXB07, 09
*4 : ARXB12, 14, 18

● Installing drain pump unit

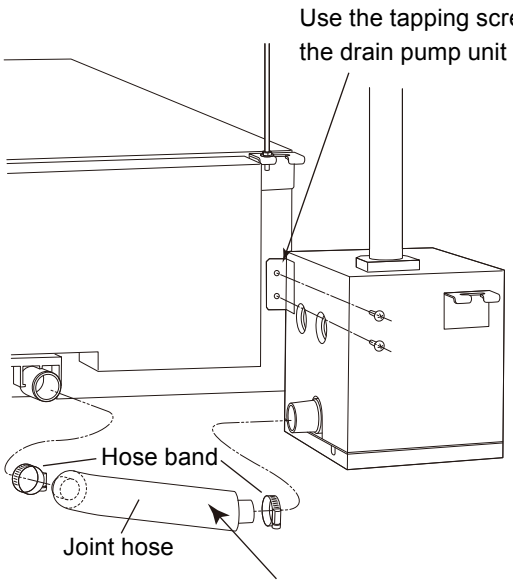

Thread the hose band through the joint hose, and insert it until it touches the drain pump unit and indoor unit.

When there is no screw hole

Puncture holes at the following position and then install.

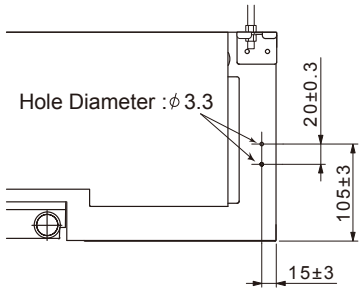

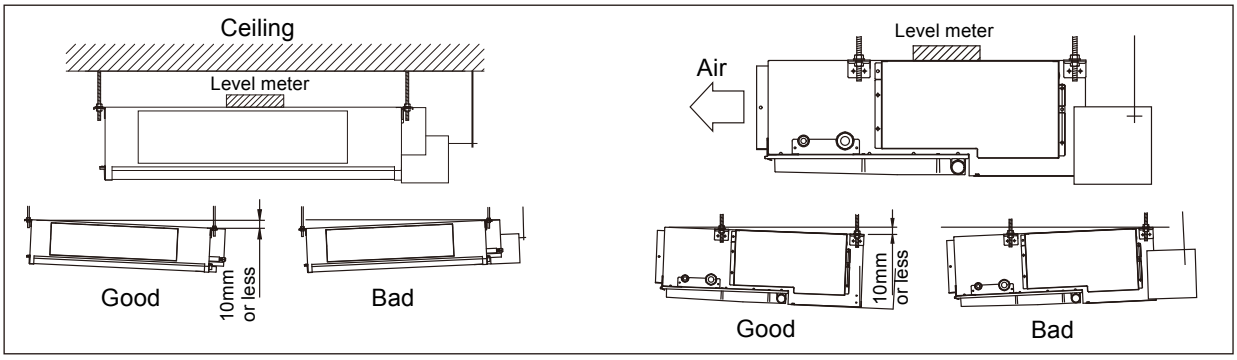

● Installing hose

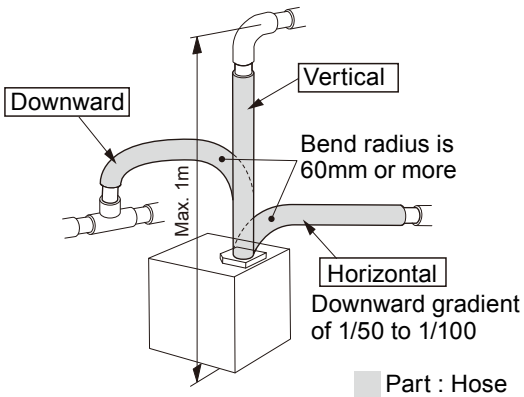

Example of wrong construction.

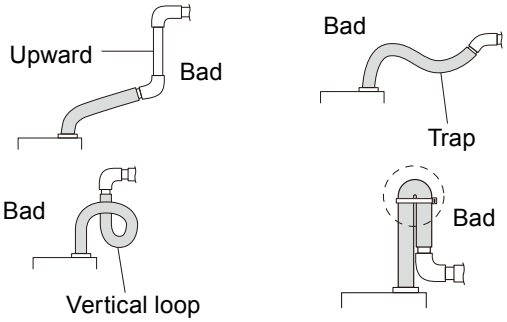

● Installing pipe

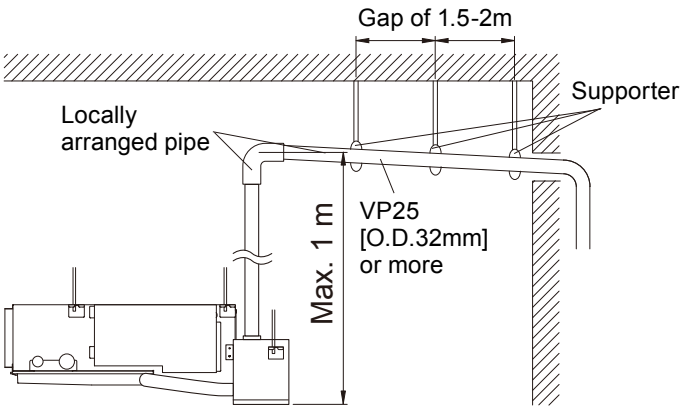

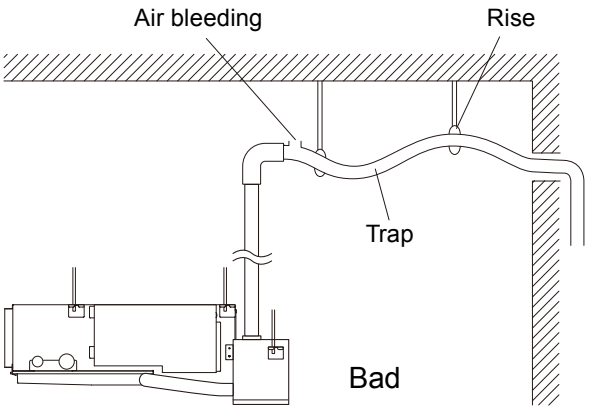

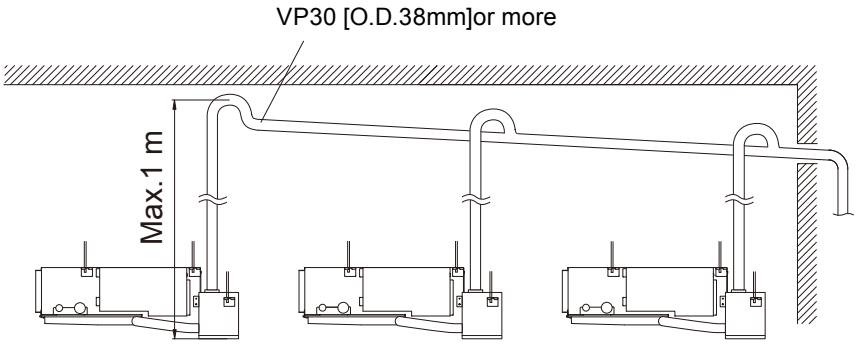

Observe the following procedures to construct centralized drain pipe fittings.

● Electrical wiring

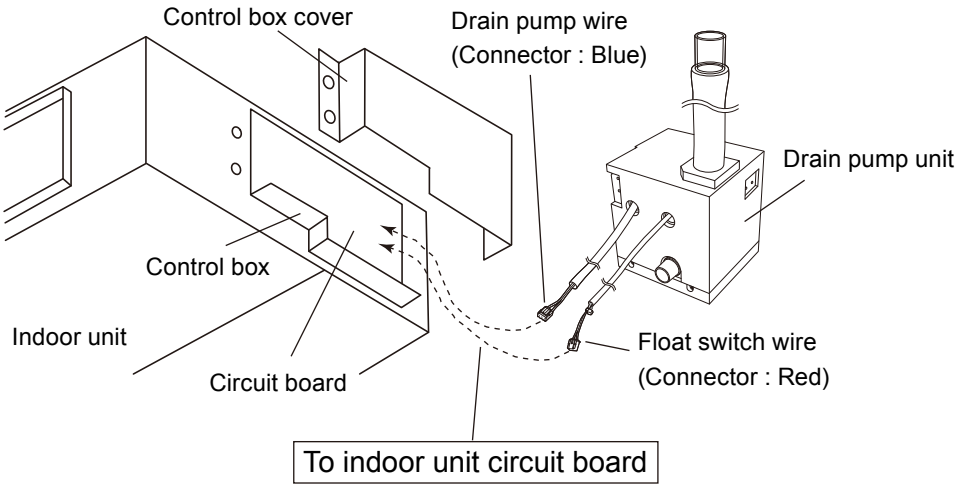

OPTIONAL PARTS

■ MODEL : UTZ-PX1NBA

● Specifications

	Unit	Specifications
Height of drain up	mm	Maximum 1000
Power source	-	220-240V, 50/60Hz
Input Power (230V, 50/60Hz)	W	12 / 10.8
Current (230V, 50/60Hz)	mA	114 / 92
Dimensions (H x W x D)	mm	176 x 178 x 154
Weight	kg	2.5
Connection pipe diameter	-	VP25 (I.D.25mm, O.D.32mm)
Direction of pipe connection *1	-	360°
Angle of pipe connection *2	-	0° (Horizontal)-90° (Vertical)
Control method	-	Control board of indoor unit
safety device	-	Float switch, Thermal fuse

*1 : Direction of pipe connection

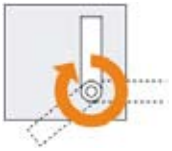

*2 : Angle of pipe connection

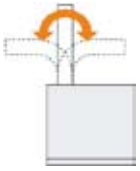

● Application indoor units

Type	Model name
Medium Static Pressure Duct	ARXA24GBLH, ARXA30GBLH, ARXA36GBLH, ARXA45GBLH

● Mounting position

(Unit : mm)

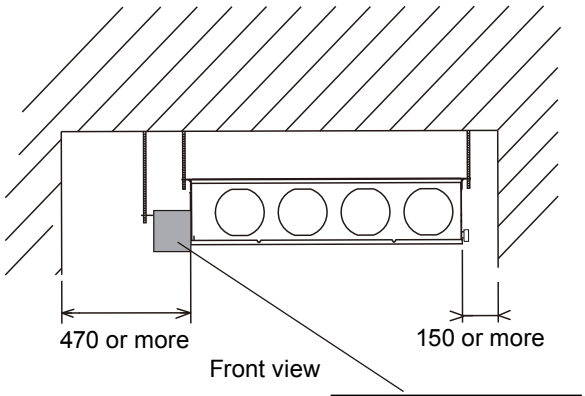

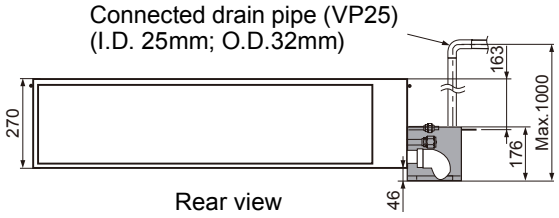

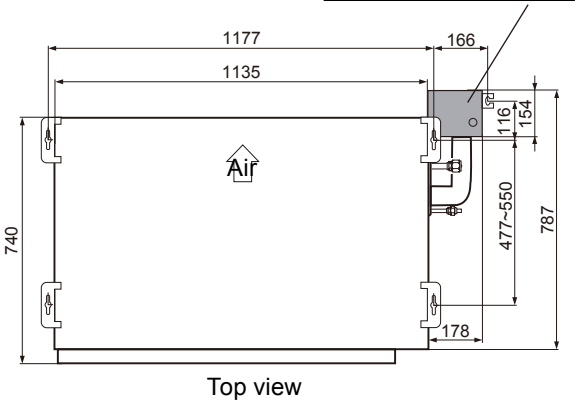

Note:
Leave the space required to service the unit.
Set a maintenance hole near the drain pump unit.

● Installing drain pump unit

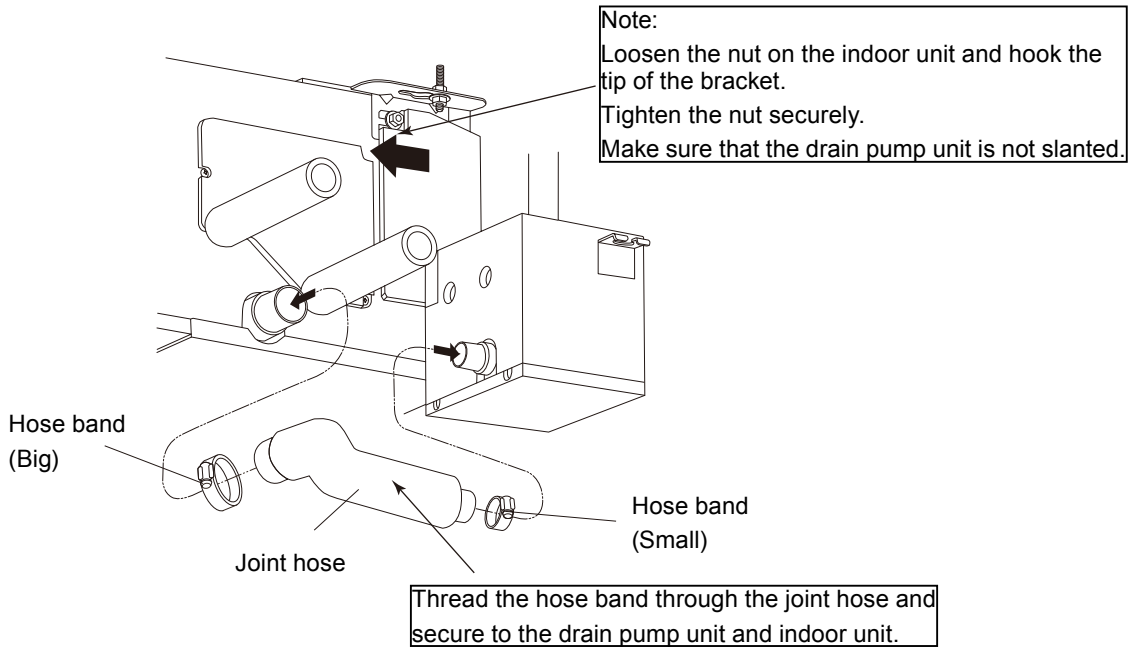

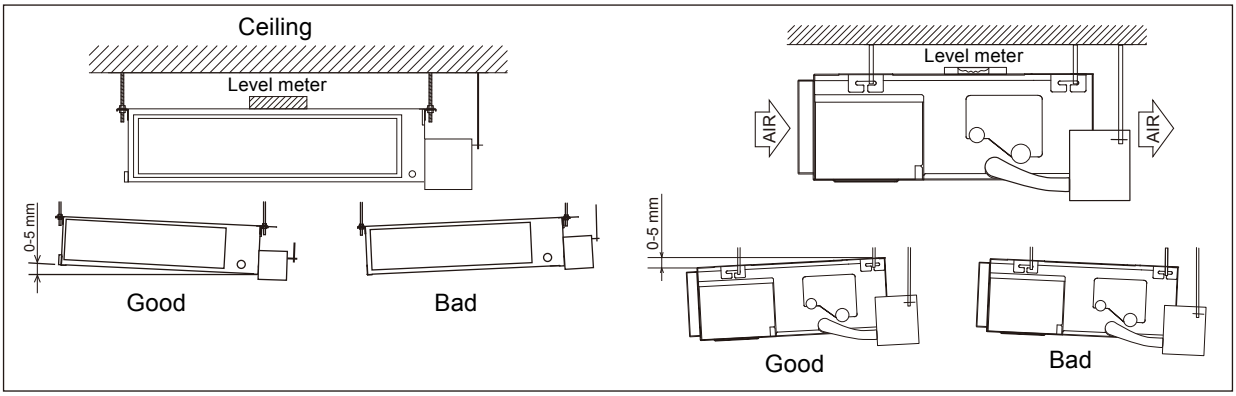

● Installing hose

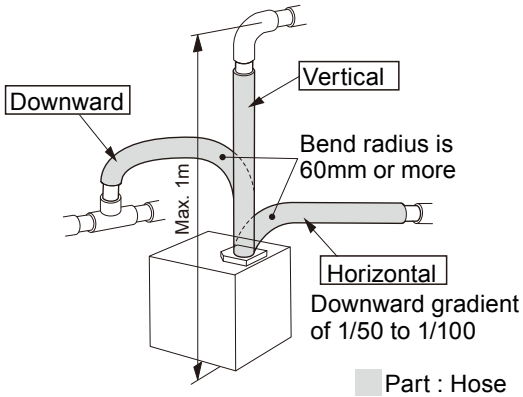

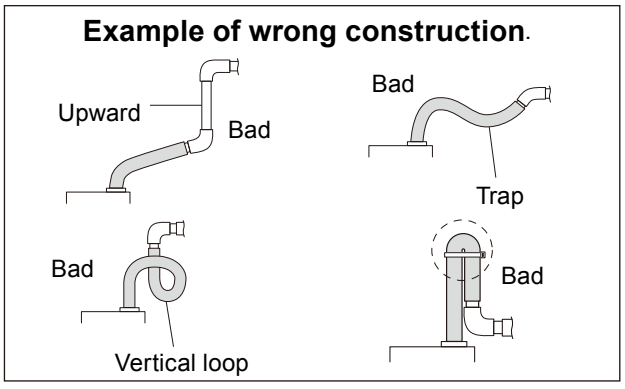

● Installing pipe

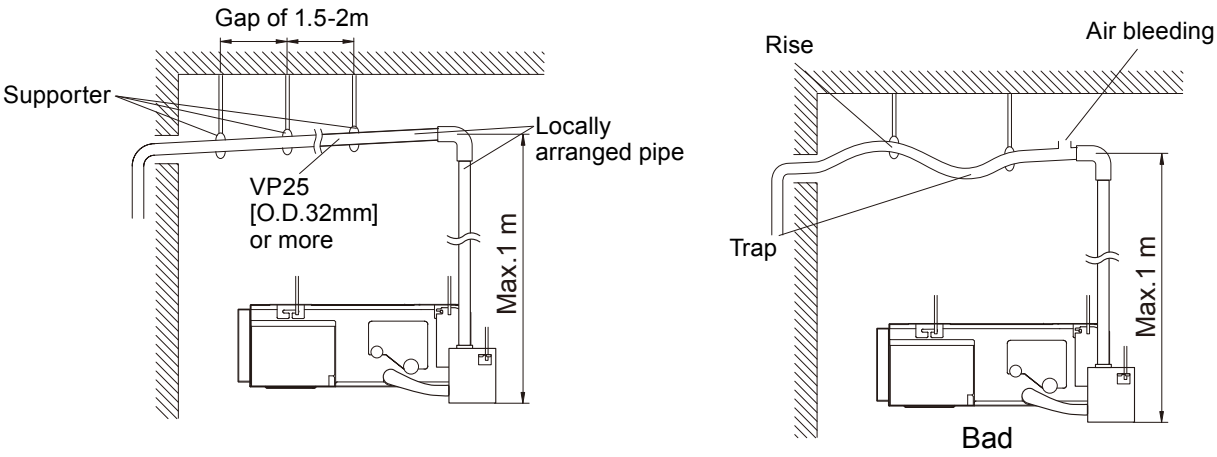

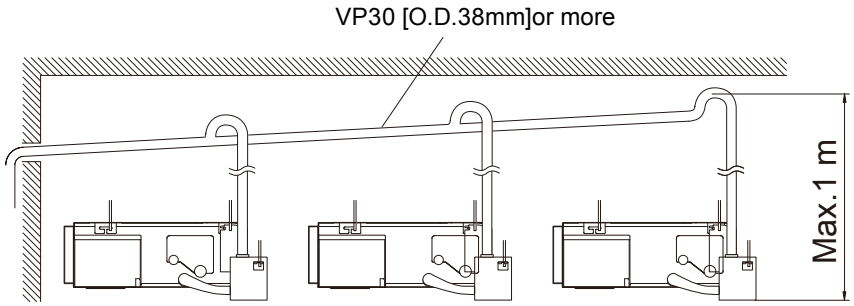

Observe the following procedures to construct centralized drain pipe fittings.

● Electrical wiring

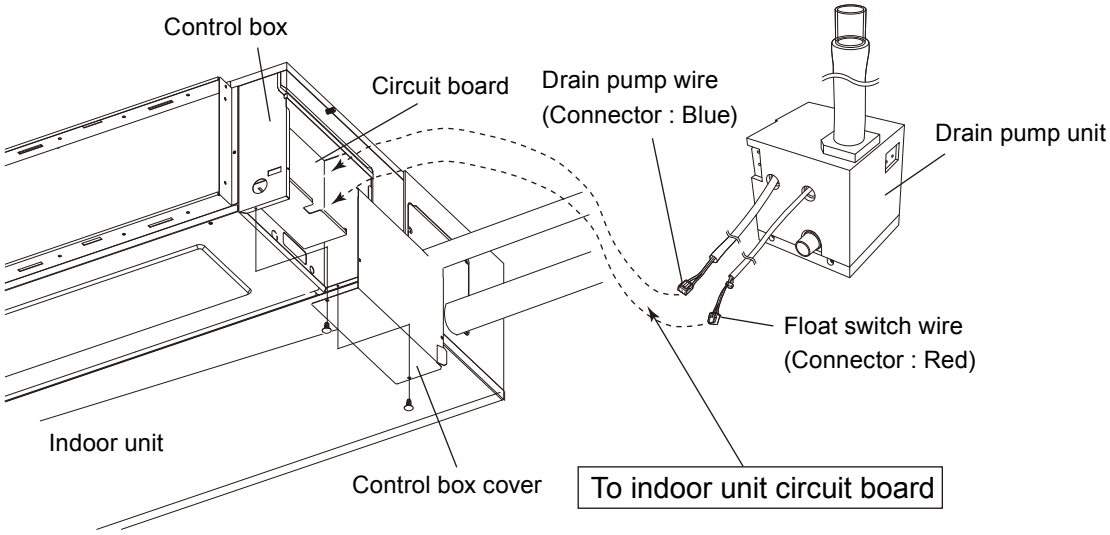

■ MODEL : UTR-DPB24T

● Application indoor units

Type	Model name
Ceiling	AB∗A30GATH, AB∗A36GATH, AB∗A45GATH, AB∗A54GATH

● Installing drain pump unit & Electrical wiring

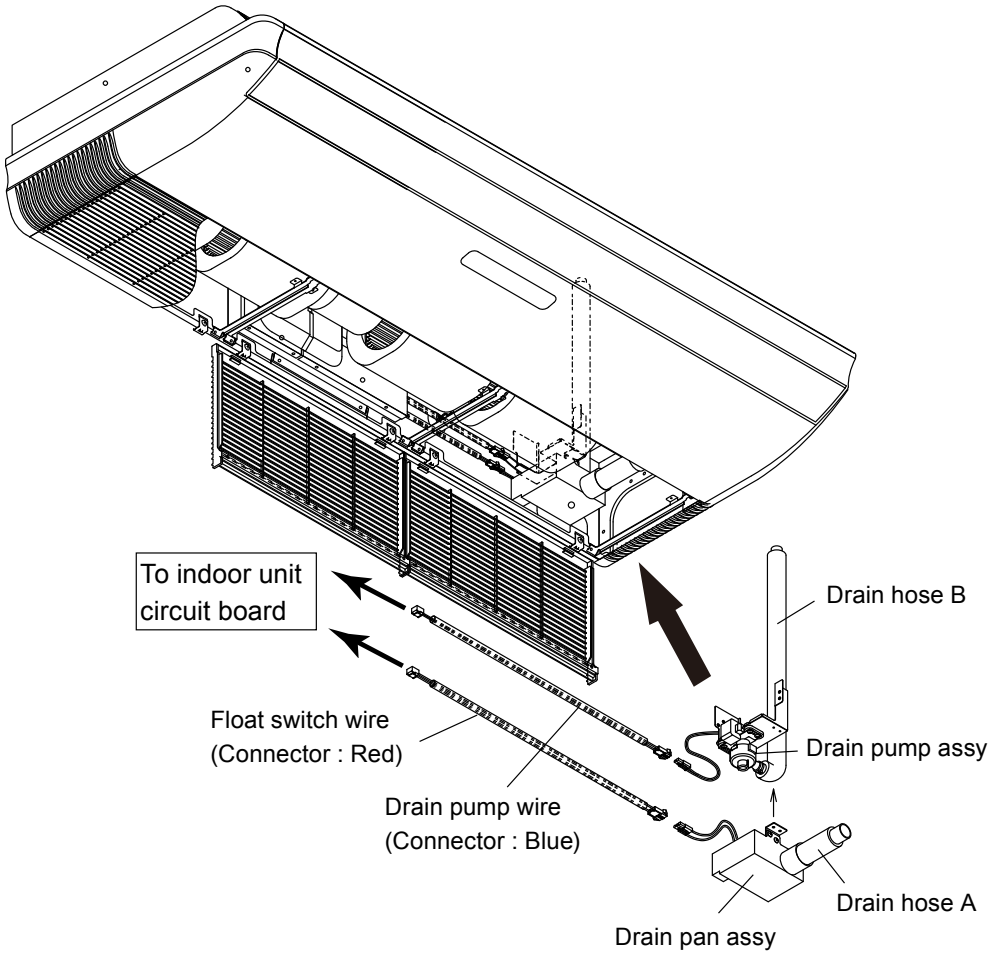

● Installing pipe

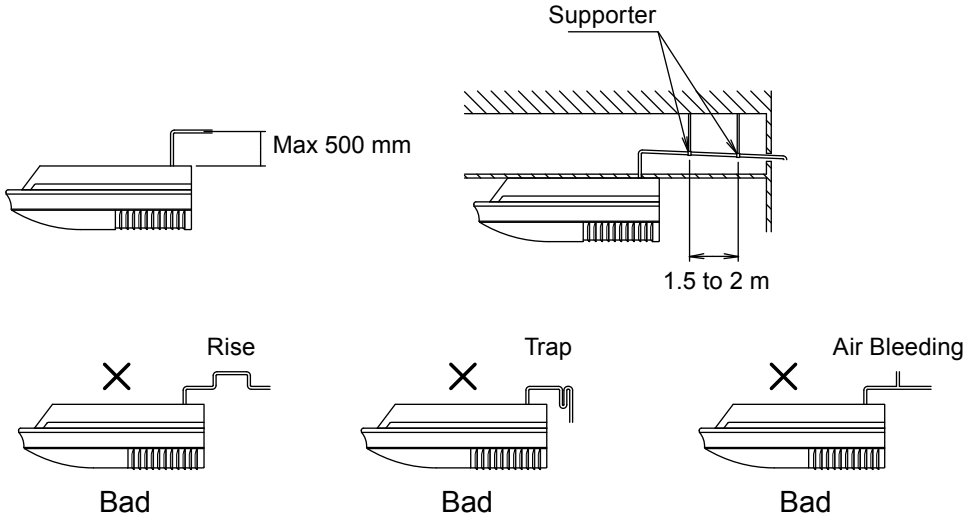

10-2. FRESH AIR INTAKE KIT (MODEL : UTZ-VXAA)

■ FEATURE

• It can be taken in fresh air of up to 10% of “high” air volume of the indoor unit by attaching Fresh Air Intake Kit to cassette type indoor unit.

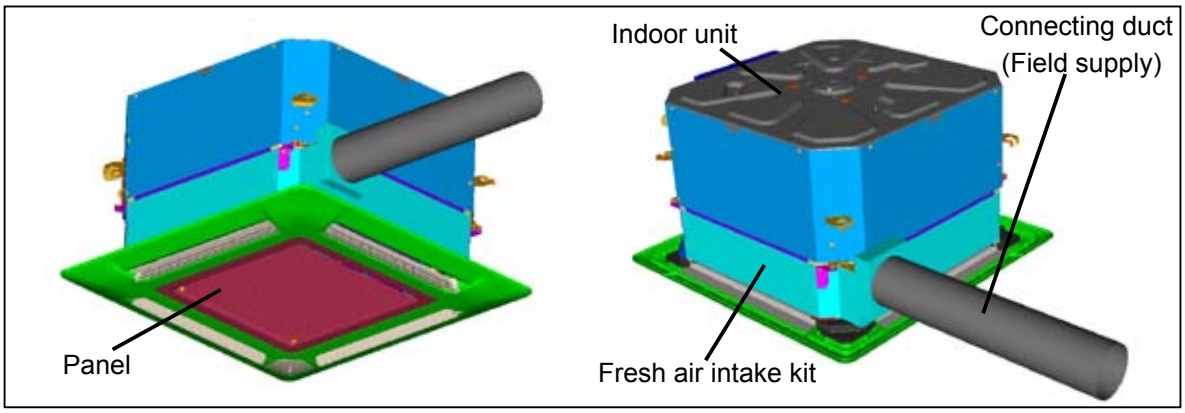

■ INSTALLATION EXAMPLE

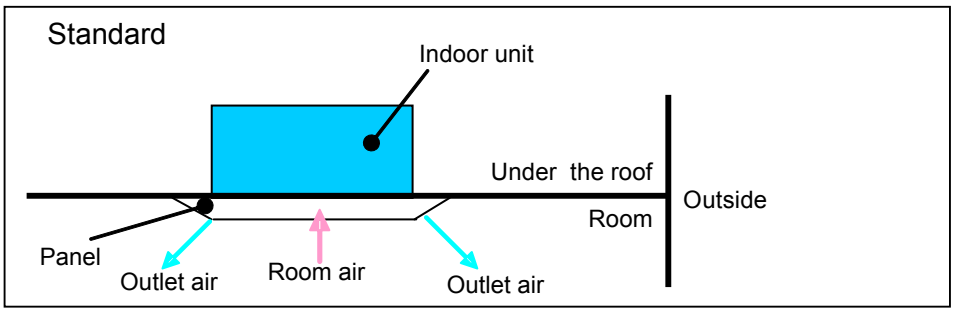

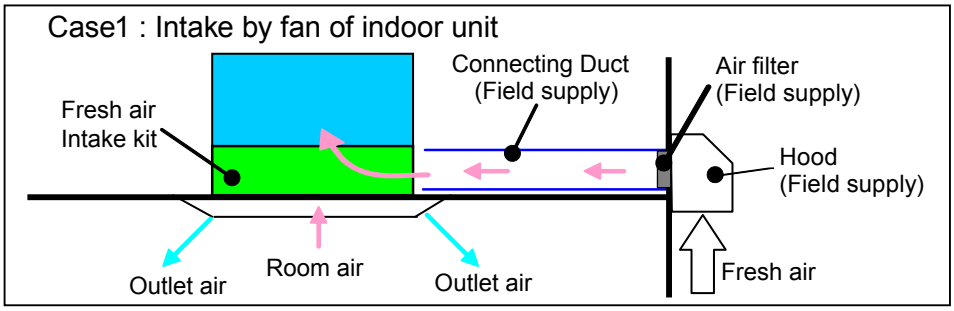

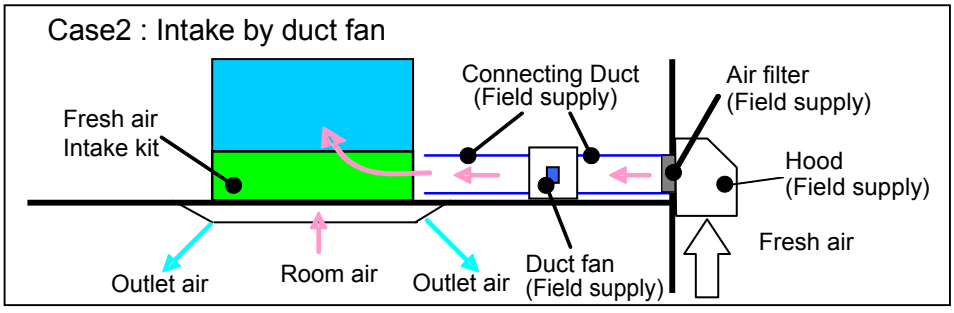

OPTIONAL PARTS

■ SPECIFICATIONS

Model name				UTZ-VXAA
Fresh air intake	Max. fresh air intake volume		%(for High)	10
Connection duct type			mm (inch)	ø 100 (3-15/16)
			Pcs	1
Dimension (HxWxD)		Net	mm (inch)	120 x 570 x 570 (4-23/32 x 22-7/16 x 22-7/16)
		Gross		165 x 585 x 585 (6-1/2 x23-1/32 x 23-1/32)
Weight		Net	kg (lb.)	3.5 (8)
		Gross		5.5 (12)

OPTIONAL PARTS

■ PRECAUTION

● About fresh air intake kit

- The Fresh Air Intake Kit can be installed onto cassette type air conditioners.
- The volume of ventilated air provided by the Fresh Air Intake Kit may be unable to fulfill ventilation regulations in all countries.
  On such occasions we ask that this kit be used along with Energy recovery ventilators.
- When intaking outside air please ensure correct air-conditioning design as based on air-conditioning load calculations.
  As outside air is not being processed an increase in outside air load can affect air conditioning.

● Installation location

- Area that generate substances that adversely affect the equipment, such as sulfuric gas,chlorine gas,add,or alkalli it will cause the copper pipes and brazed joints to corrode,whitch can cause refrigerant leakage.
- Area with high salt content,such as at the seaside. It will deteriorate metal parts, causing the parts to fall or the unit to leak water.
- Be certain to use electric dampers and shutters to avoid infiltration of cold air, wind and fog during shutdown in areas with cold climates, strong winds, or where fogs are common.
- Please ensure the product is installed a distance of at least three times the duct diameter away from exterior wall air inlets, or air exhausts for the prevention of short circuits.

● Temperature conditions

- Condensation may form on the product when outside air temperature is low, and the temperature and humidity surrounding the product are high. Don't intake the air of below 0°C into the Fresh air intake kit.
- The upper limit of the product's temperature range should respond to the outdoor temperature range.

● About duct fan

- When installing the duct fan, connect the drive relay (field supplied) and operate with the indoor unit.
- Please ensure the intake air volume is below 10% of the product’s air volume HI. When the intaken air volume becomes too large there the operating noise may increase and room temperature detection may be affected.

● About the duct connection

- Procure a duct with internal diameter that fits the external diameter of the duct flange.
- Please note that regulations of some countries may require the use of a nonflammable duct.
- If the duct penetrates a fire-retarding division or other fire-proofing measures, the installation of fire dampers, or a construction that does not adversely affect fire control measures is a regulatory requirement of some countries.
- When using metallic ducts please ensure metals (i.e., metal lath, wire lath, stainless sheeting) are electrically insulated. (A short occurring by electrical connection can cause fire)
- Please ensure to thermally insulate connected ducts to prevent condensation.
- Please make certain that netting or other measures are installed in parts exposed to the outside air to prevent infiltration of small animals such as birds and insects.
- Please be certain to install external air filters to parts exposed to the outside air for heat exchanger protection of indoor equipment.
- Please avoid the infiltration of rain water by installing outside ducts with an incline of at least 1/30, and fitting hoods on openings.

OPTIONAL PARTS

■ DIMENSIONS

Unit : mm (inch)

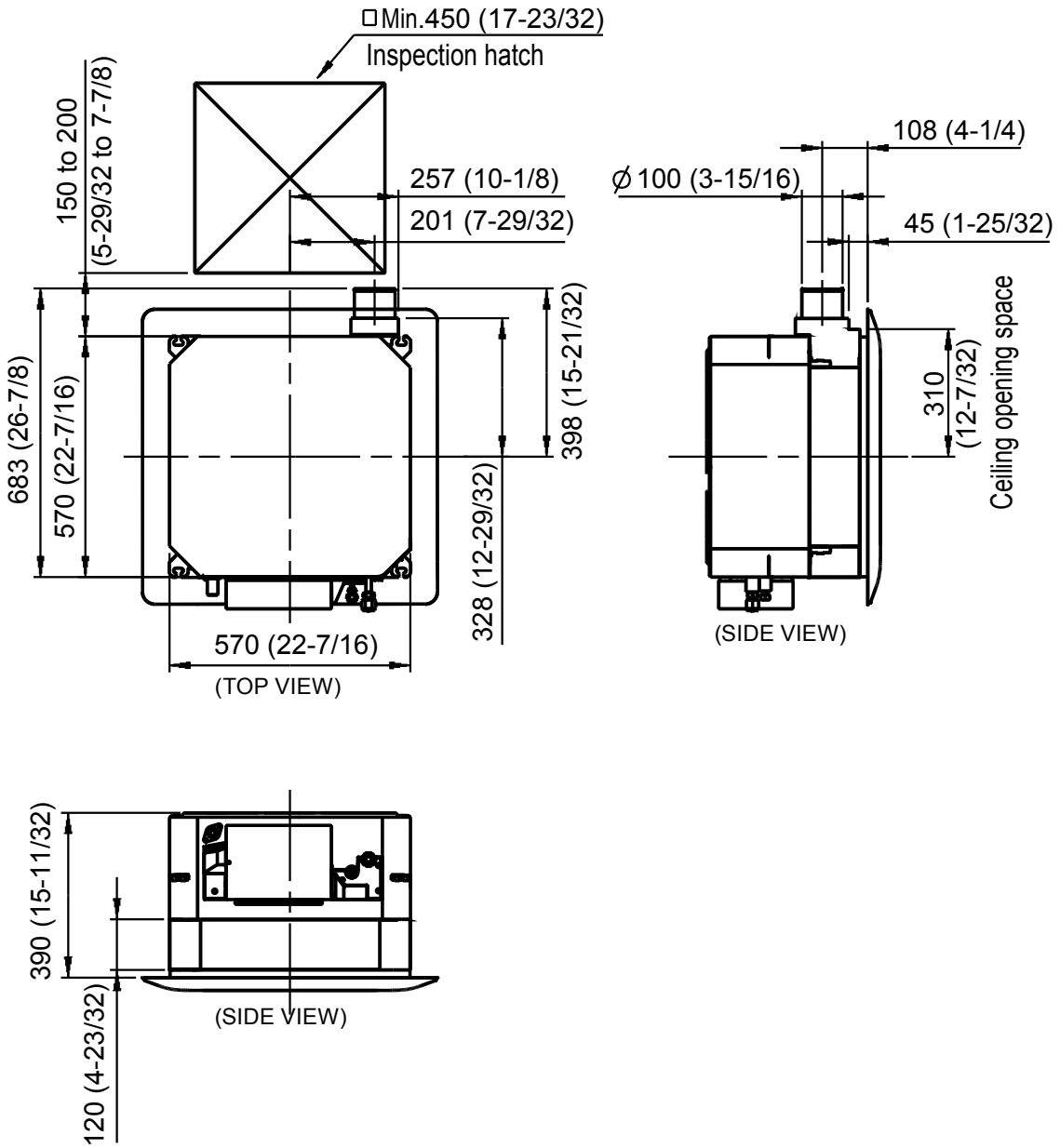

• When installing this kit, inspection hatch is necessary. (It is necessary when servicing.)

■ AIR FLOW

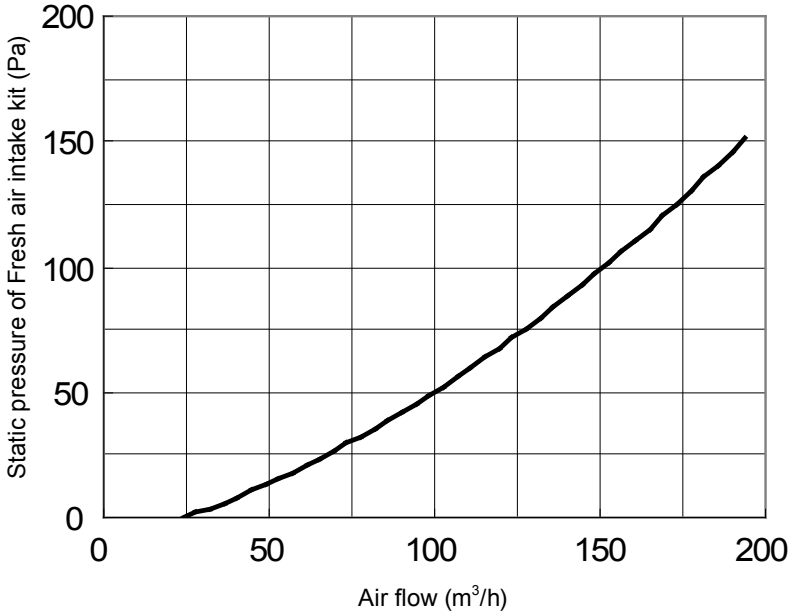

Unit : mm (inch)

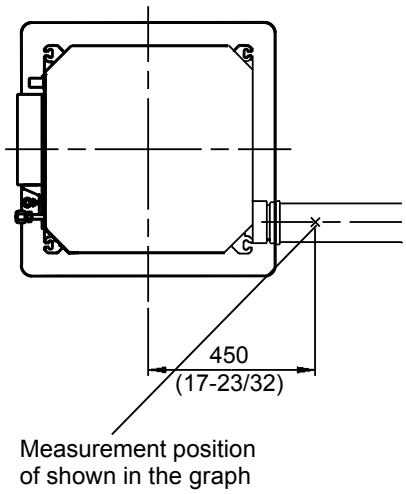

OPTIONAL PARTS

■ FRESH AIR CONTROL OUTPUT

- You can control duct fan by synchronization with fan operation of indoor unit.
- Wire for fresh air control output is supplied with Fresh Air Intake Kit.
- Extended length of the wire : Max. 25m

● Connection diagram

- For Relay Output voltage : DC12 ± 2V
  Permissible current : 50mA

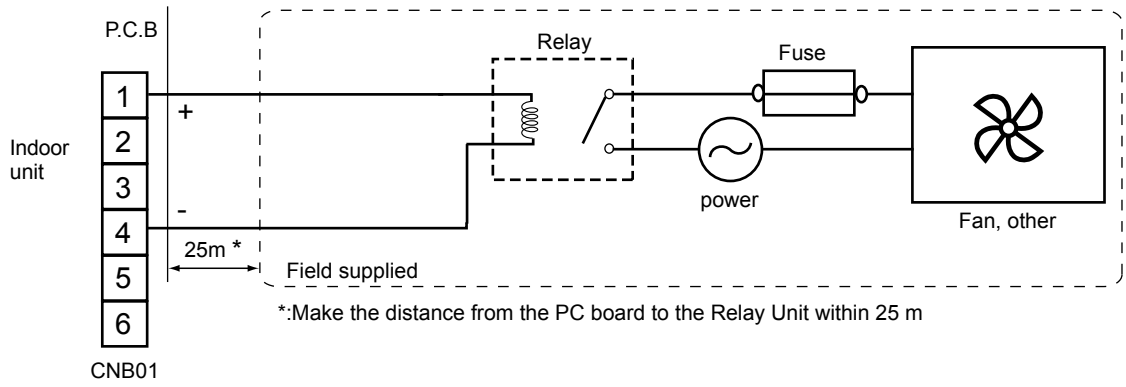

● Indoor unit status

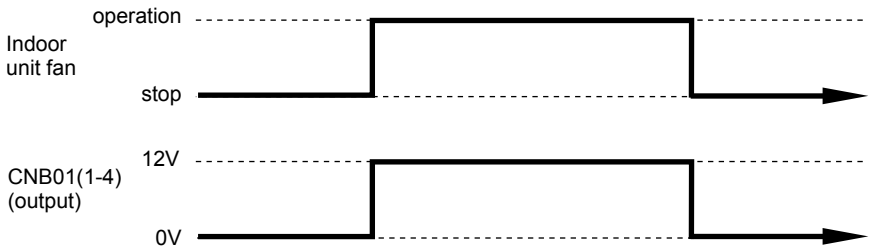

● Wire (External output ③)

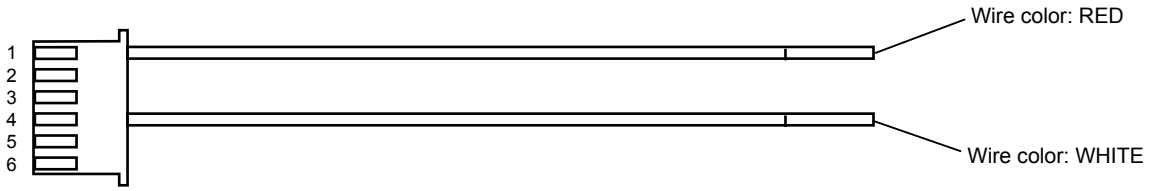

■ ACCESSORY PARTS

Name and shape	Q'ty	Application
Installation manual 	1	
Chamber 	1	Air joint for connection duct
Wire cover 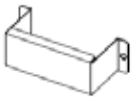	1	Cover for extension wire
Screw 	4	Attaching for chamber Attaching for wire cover
Extension wire for louver 	2	Extension wire for louver

Name and shape	Q'ty	Application
Extension wire for receiver kit 	1	Extension wire for receiving kit
Wire (External output ①) 	1	For connect indoor unit to relay of duct fan (For single or multi)
Wire (External output ②) 	1	For connect indoor unit to relay of duct fan (For VRF)
Wire (External output ③) 	1	For connect indoor unit to relay of duct fan (For VRF)
Bolt 	4	For attaching kit to indoor unit
Binder 	1	For fixing wire

10-3. FRESH AIR INTAKE KIT (MODEL : UTZ-VXGA)

■ FEATURE

• It can be taken in fresh air of up to 10% of “high” air volume of the indoor unit by attaching Fresh Air Intake Kit to cassette type indoor unit.

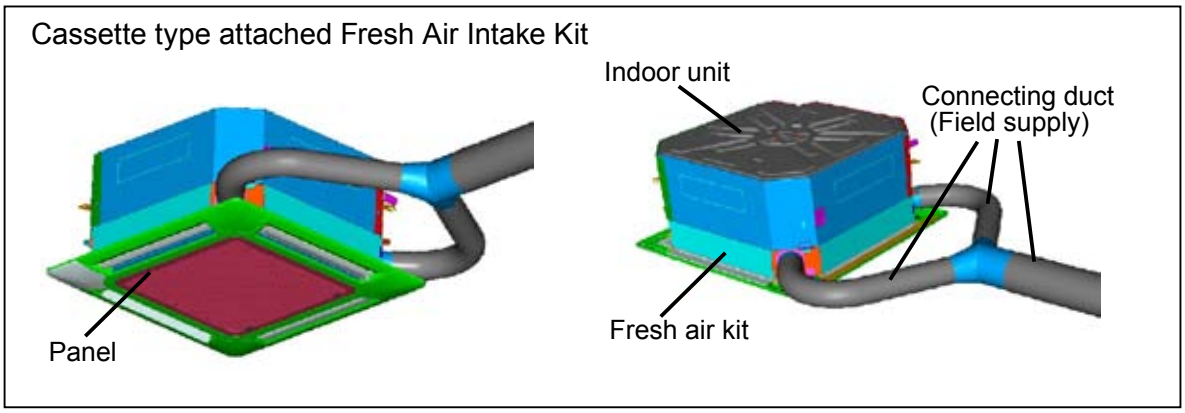

■ INSTALLATION EXAMPLE

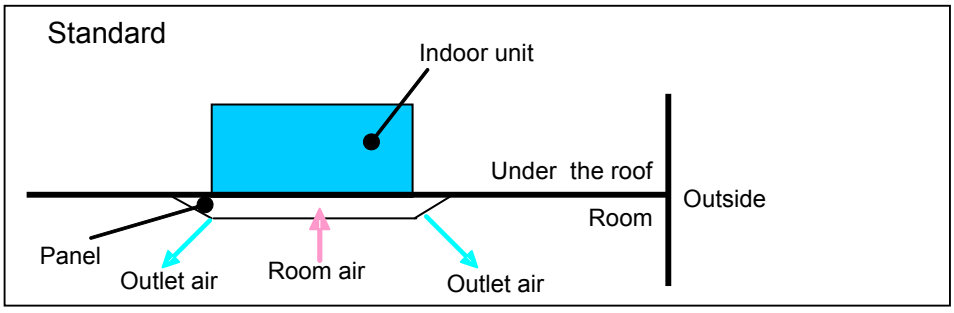

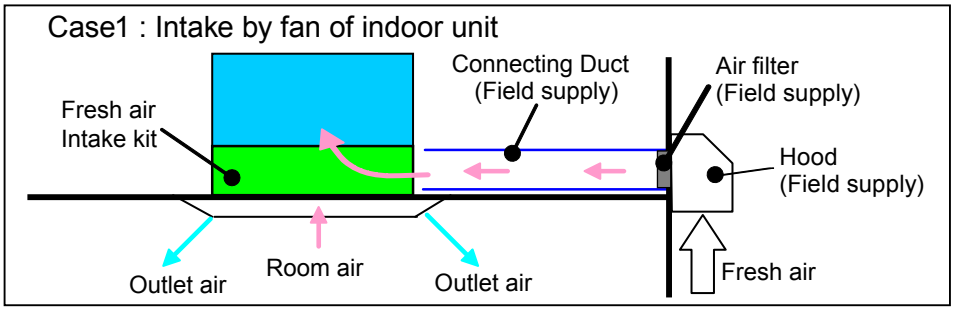

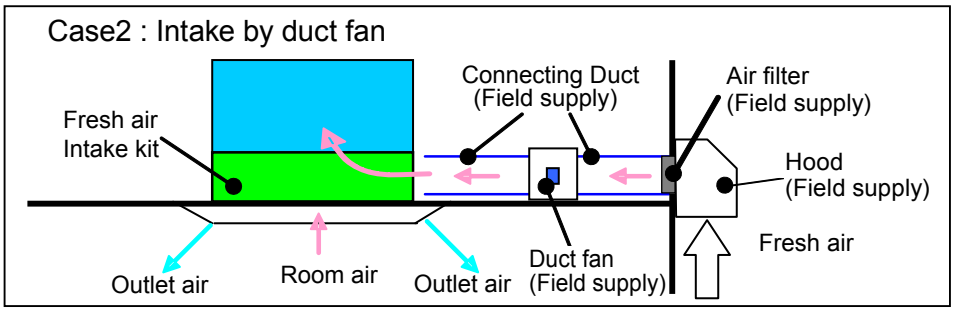

■ SPECIFICATIONS

Model name				UTZ-VXGA
Fresh air intake	Max. fresh air intake volume	% (for High)	2- way intake	10
			1- way intake	5
Connection duct type		mm (inch)	ø 100 (3-15/16)	
		Pcs	2	
Dimension (HxWxD)	Net	mm (inch)	120 x 840 x 840 (4-23/32 x 33-1/16 x 33-1/16)	
	Gross		165 x 860 x 860 (6-1/2 x 33-27/32 x 33-27/32)	
Weight	Net	kg (lb.)	5.5 (12)	
	Gross		9.0 (20)	

OPTIONAL PARTS

■ PRECAUTION

● About fresh air intake kit

- The Fresh Air Intake Kit can be installed onto cassette type air conditioners.
- The volume of ventilated air provided by the Fresh Air Intake Kit may be unable to fulfill ventilation regulations in all countries.

  On such occasions we ask that this kit be used along with Energy recovery ventilators.
- When intaking outside air please ensure correct air-conditioning design as based on air-conditioning load calculations.

  As outside air is not being processed an increase in outside air load can affect air conditioning.

● Installation location

- Area that generate substances that adversely affect the equipment, such as sulfuric gas,chlorine gas,add,or alkali it will cause the copper pipes and brazed joints to corrode,which can cause refrigerant leakage.
- Area with high salt content,such as at the seaside. It will deteriorate metal parts, causing the parts to fall or the unit to leak water.
- Be certain to use electric dampers and shutters to avoid infiltration of cold air, wind and fog during shutdown in areas with cold climates, strong winds, or where fogs are common.
- Please ensure the product is installed a distance of at least three times the duct diameter away from exterior wall air inlets, or air exhausts for the prevention of short circuits.

● Temperature conditions

- Condensation may form on the product when outside air temperature is low, and the temperature and humidity surrounding the product are high. Don't intake the air of below 0°C into the fresh air intake kit.
- The upper limit of the product's temperature range should respond to the outdoor temperature range.

● About duct fan

- When installing the duct fan, connect the drive relay (field supplied) and operate with the indoor unit.
- Please ensure the intake air volume is below 10% of the product's air volume HI. When the intaken air volume becomes too large there the operating noise may increase and room temperature detection may be affected.

● About the duct connection

- Procure a duct with internal diameter that fits the external diameter of the duct flange.
- Please note that regulations of some countries may require the use of a nonflammable duct.
- If the duct penetrates a fire-retarding division or other fire-proofing measures, the installation of fire dampers, or a construction that does not adversely affect fire control measures is a regulatory requirement of some countries.
- When using metallic ducts please ensure metals (i.e., metal lath, wire lath, stainless sheeting) are electrically insulated. (A short occurring by electrical connection can cause fire)
- Please ensure to thermally insulate connected ducts to prevent condensation.
- Please make certain that netting or other measures are installed in parts exposed to the outside air to prevent infiltration of small animals such as birds and insects.
- Please be certain to install external air filters to parts exposed to the outside air for heat exchanger protection of indoor equipment.
- Please avoid the infiltration of rain water by installing outside ducts with an incline of at least 1/30, and fitting hoods on openings.

OPTIONAL PARTS

■ DIMENSIONS

Unit : mm (inch)

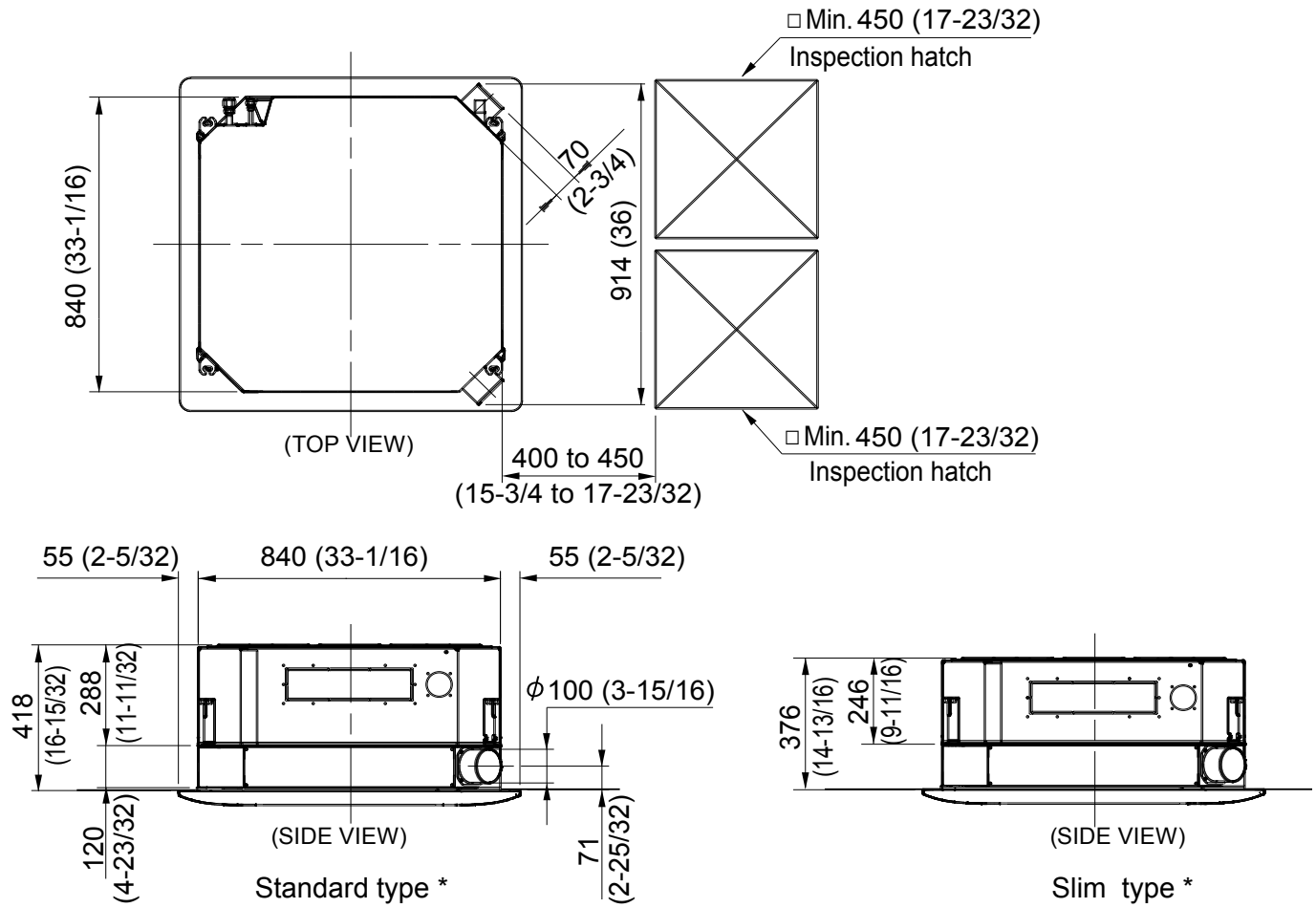

* : The size is different according to indoor unit used.

- When installing this kit, inspection hatch is necessary. (It is necessary when servicing.) Either one of inspection hatches must be installed.

■ AIR FLOW

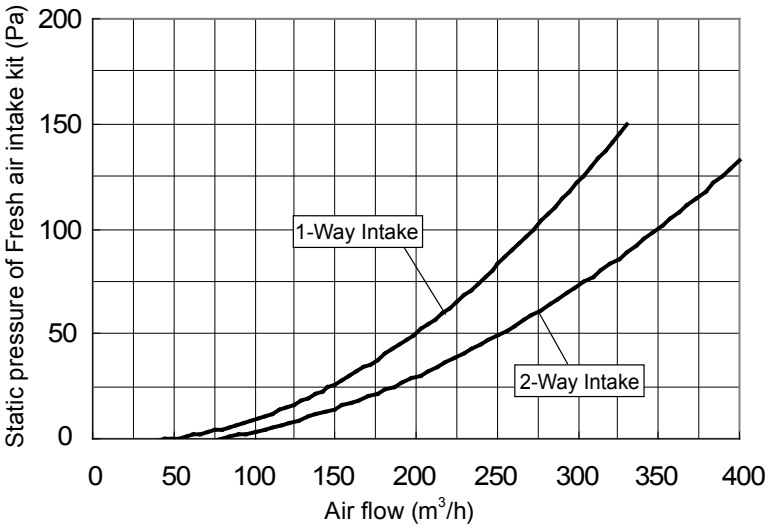

Unit:mm (inch)

for 2-Way Intake

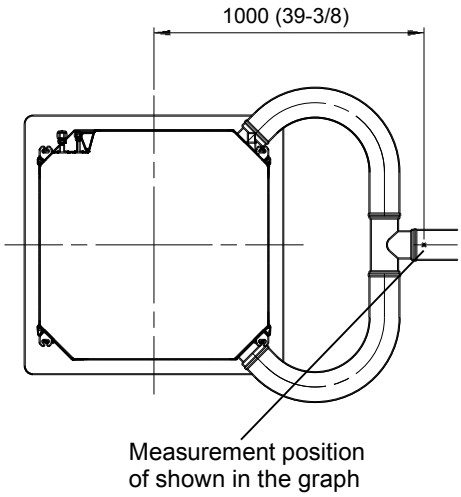

for 1-Way Intake

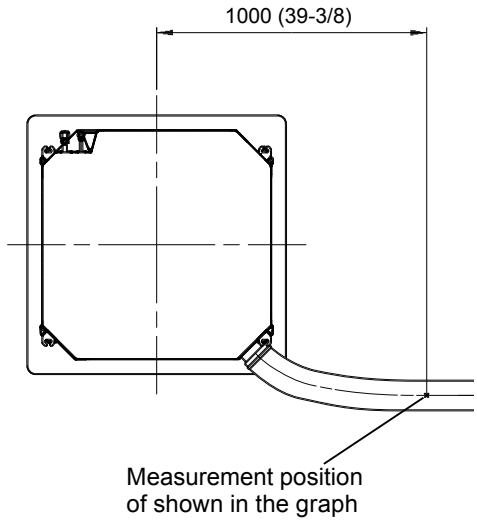

■ FRESH AIR CONTROL OUTPUT

- You can control duct fan by synchronization with fan operation of indoor unit.
- Wire for fresh air control output is supplied with Fresh Air Intake Kit.
- Extended length of the wire : Max. 25m

● Connection diagram

- For Relay Output voltage : DC12 ± 2V
  Permissible current : 50mA

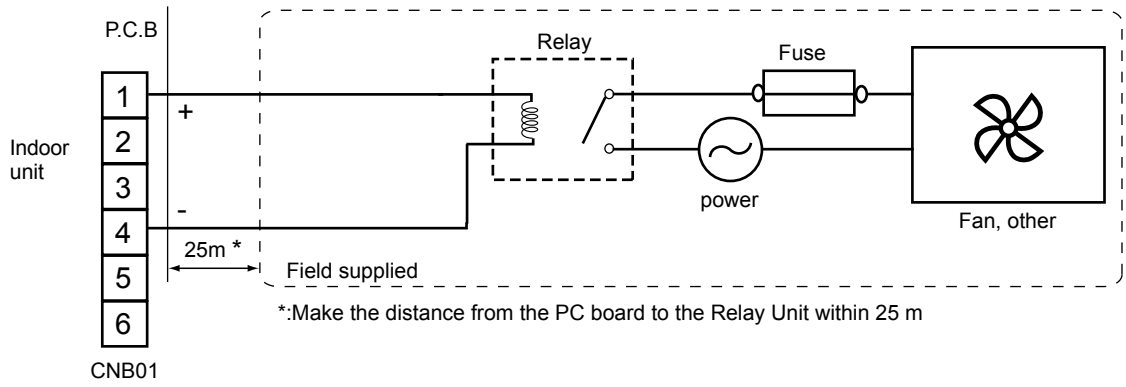

● Indoor unit status

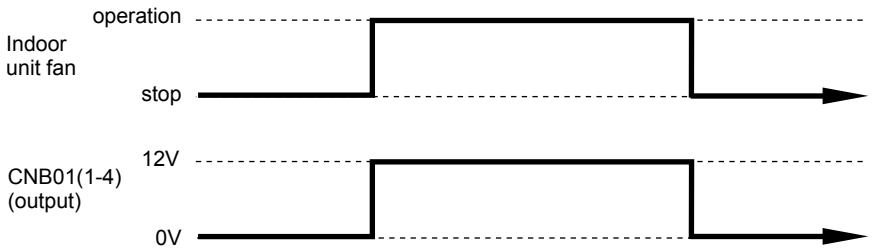

● Wire (External output ③)

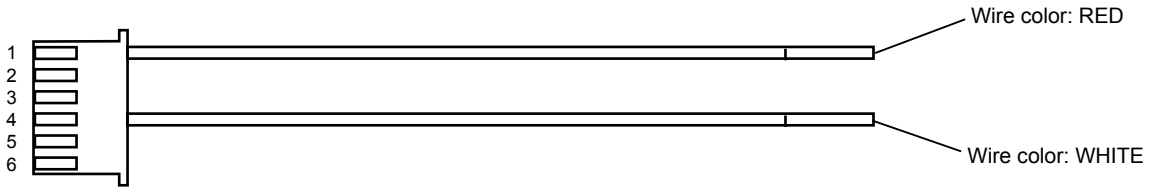

■ ACCESSORY PARTS

Name and shape	Q'ty	Application
Installation manual 	1	
Duct Flange 	2	Air joint for connecting duct
Cover 	2	Protective cover to prevent surface condensation
Screw 	16	For Attaching duct flange For Attaching Cover
Hook plate 	4	Plate for attaching panel
Shutter plate 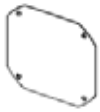	1	Shutter plate for 1-way intake
Insulation ① 	2	Affixing the insulation outside of the kit
Insulation ② 	1	Affixing the insulation to tube of drain pump for prevent condensation

Name and shape	Q'ty	Application
Insulation ③ 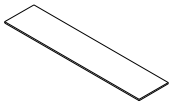	3	Affixing the insulation outside of the kit
Insulation ④ 	4	Affixing the insulation outside of the cover
Binder 	1	Fixing tube of drain pump
Extension wire for louver 	2	Extension wire for louver
Extension wire for receiver kit 	1	Extension wire for receiver kit
Wire (External output ①) 	1	For connect indoor unit to relay of duct fan
Wire (External output ②) 	1	For connect indoor unit to relay of duct fan
Wire (External output ③) 	1	For connect indoor unit to relay of duct fan (For VRF)
Bolt 	4	For attaching the kit to indoor unit

10-4. AUTO LOUVER GRILLE KIT

■ MODELS

UTD-GXSA-W
UTD-GXSB-W
UTD-GXSC-W

■ FEATURE

Simple flat Auto Louver will provide comfort airflow and harmonize with luxury interior.





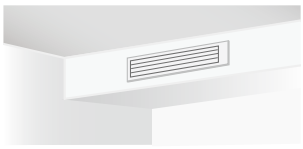

Closed louver
[Operation is stopped.]

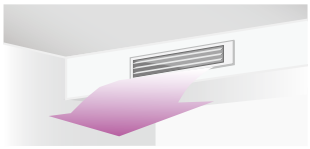

Opened louver
[During operation]

● Flexible control

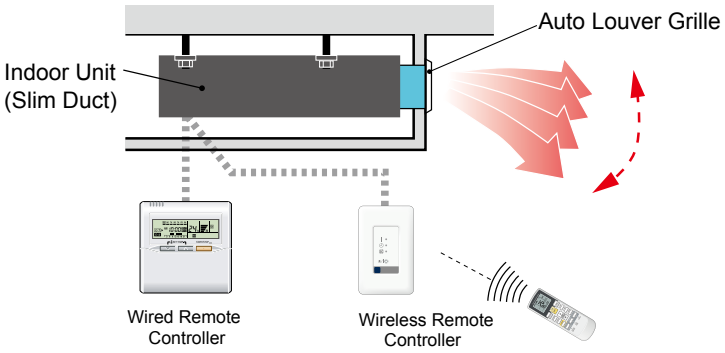

★*Operation with Indoor Unit*

Auto Louver can be operated by synchronizing remote controller of Indoor Unit.

★*UP and Down auto swing*

- Auto airflow direction and auto swing
- 4 steps selectable

★*Auto-closing louver*

When operation of Indoor Unit is stopped, the louver will automatically close.

OPTIONAL PARTS

● Ideal warm airflow

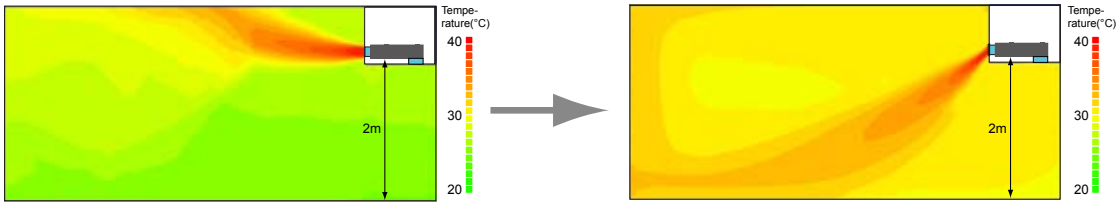

Without Auto Louver

[Condition]
Model (Indoor unit): ARXD12GALH
Outdoor temperature: 2°C
Operation contents: Heating
Set temperature: 30°C
Air flow: Hi

With Auto Louver

[Condition]
Model (Indoor unit): ARXD12GALH
Model (Auto louver grille): UTD-GXSA-W
Outdoor temperature: 2°C
Operation contents: Heating
Set temperature: 30°C
Air flow: Hi
Vertical flap: Downward

● Flexible installation

Auto Louver Grille can be connected either directly with indoor unit or through the rectangular duct.

(a) Direct connection to flange

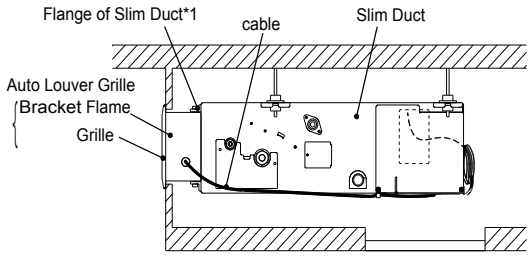

*1 : Attachment is not necessary.

(b) Connection with rectangular duct

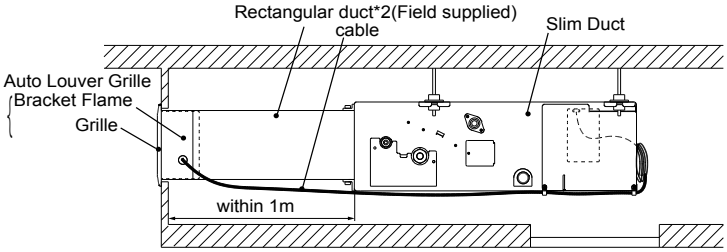

*2 : Length of connecting duct must be within 1m

■ SPECIFICATIONS

Model name			UTD-GXSA-W	UTD-GXSB-W	UTD-GXSC-W
Power Supply			Connecting with Control box of indoor unit		
Fixing of Auto Louver Grille			Screw fixing to Flange or Rectangular duct		
Extension Square Duct Limit			1.0m (Max. duct length between indoor unit and Grille)		
Net Dimension (H x W x D)		mm (inch)	180x683x(84+9) [7-3/32x26-7/8x(3-5/16+11/32)]	180x883x(84+9) [7-3/32x34-3/4x(3-5/16+11/32)]	180x1083x(84+9) [7-3/32x42-5/8x(3-5/16+11/32)]
Weight	Net	kg (lb.)	2.0 (4.4)	2.5 (5.6)	3.0 (6.7)
	Gross		3.0 (6.7)	3.5 (7.8)	4.0 (8.9)
Color			White		
Louver Motor			Stepping Motor		
Material			Flame retardant ABS		
Accessories			Fitting Flame, etc.		
Operation range	Cooling	°C (°F)	18 to 32 (64 to 90)		
		% RH	80% or less		
	Heating	°C (°F)	16 to 30 (60 to 88)		

OPTIONAL PARTS

■ PRECAUTION

●Select the installation location that meets the following requirement and that is approved by the customer.

• Cold and warm air should reach the entire room.

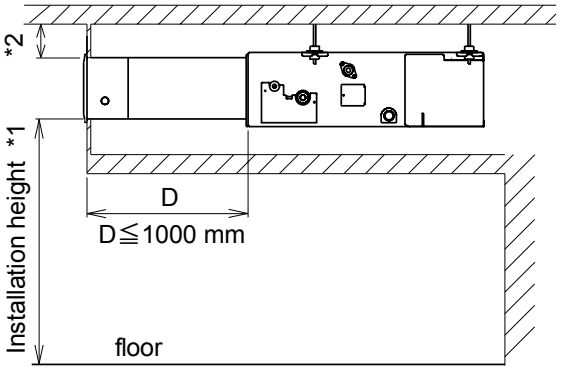

*1) Refer to Design & Technical manual for Air velocity distribution and Air temperature distribution during heating.

*2) If the distance from the ceiling is not adequate, it may cause mildew stains on the wall or the ceiling. (Ensure to fix at least 150 mm away from any surface of the equipment.)

●Do not install the unit in the following areas

- The upper part of the vicinity of room entrance. It may cause condensation on the outlet port.
- Near a wall surface. It may cause condensation on the wall during cooling.
- Area filled with mineral oil or containing a large amount of splashed oil or steam, such as a kitchen.
- The place where it will be exposed to direct sunlight. Or else, it may cause a change in color.

●When the installation area is exposed to direct sunlight, take measures to block the light such as covering the grille surface with a sheet. Or else, it may cause a change in color.

●Use an appropriate Grille that is compatible with the indoor unit. If not used with the correct combination, it may cause condensation.

●Perform heat insulation and field setting according the Design & Technical manual of Indoor unit. Not installing as per the instructions may cause condensation.

OPTIONAL PARTS

■ DIMENSIONS

● MODEL : UTD-GXSA-W

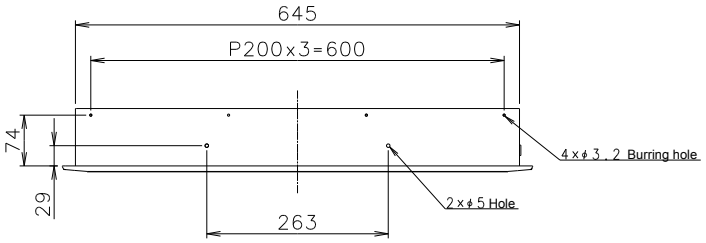

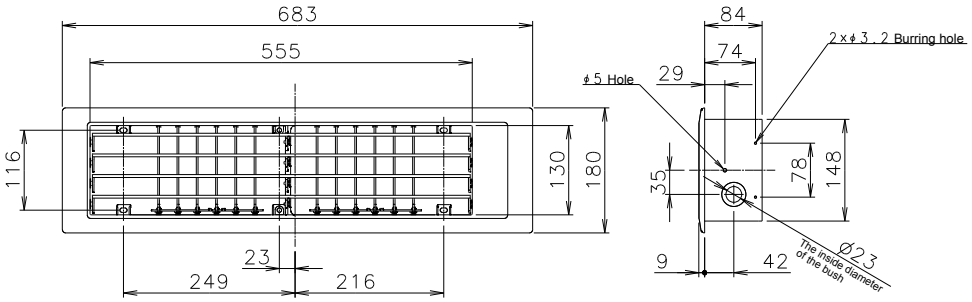

● MODEL : UTD-GXSB-W

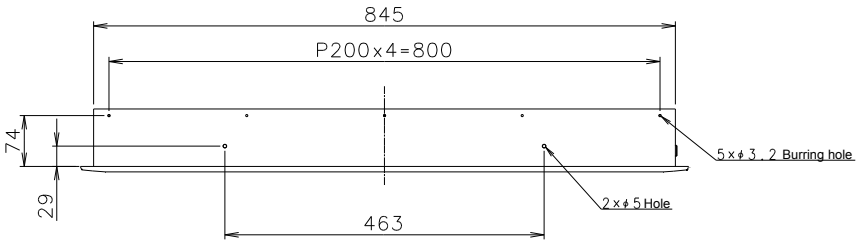

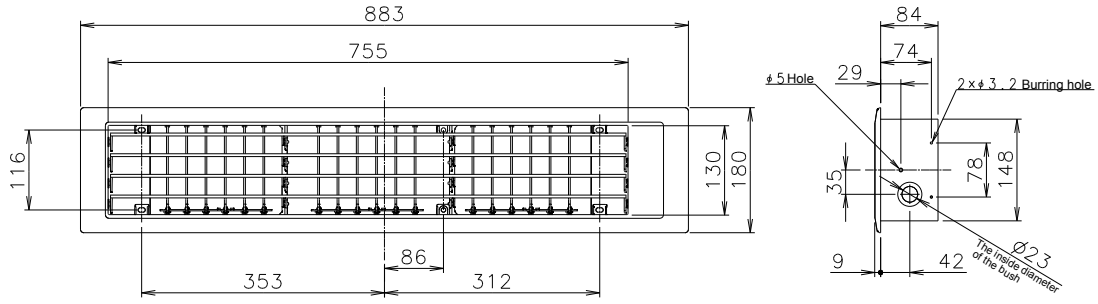

● MODEL : UTD-GXSC-W

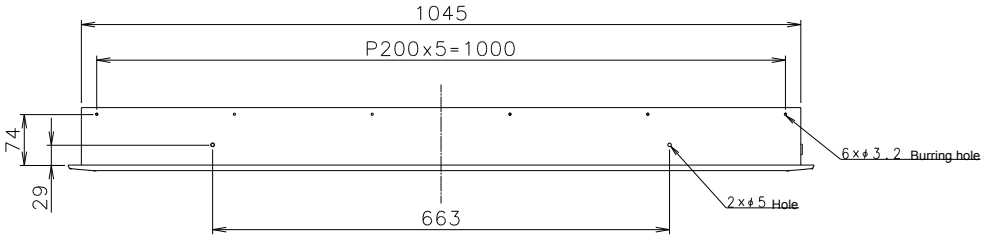

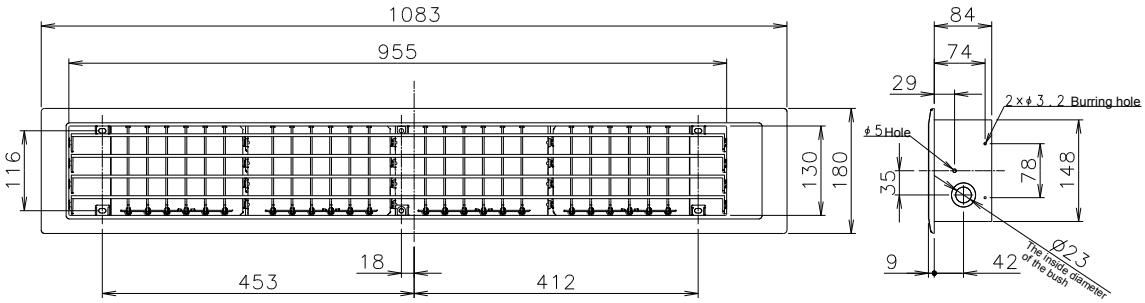

OPTIONAL PARTS

■ ACCESSORY PARTS

Name and shape	Q'ty
Installation manual 	1
Operating manual 	1
Grille 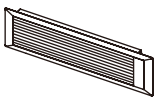	1
Bracket frame 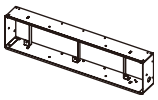	1

Name and shape	Q'ty
Screw-A 	16
Screw-B 	6
Cable clip 	2
Binder 	3
Bushing 	1

OPTIONAL PARTS

AIRSTAGE™ J-II

Variable Refrigerant Flow System



FUJITSU GENERAL LIMITED

1116, Suenaga, Takatsu-ku, Kawasaki 213-8502, Japan

URL : http://www.fujitsu-general.com

"AIRSTAGE™" is a worldwide trademark of FUJITSU GENERAL LIMITED.

* Microsoft® and Windows® are registered trademarks of Microsoft Corporation in United States.
* Adobe® and Acrobat Reader® are registered trademarks of Adobe Systems Incorporated in the United States.
* Intel® ,Pentium® and Celeron® are registered trademarks of Intel Corporation or its subsidiaries in the United States.
* AMD Athlon™ and AMD Duron™ are registered trademarks of Advanced Micro Devices, Inc.
* Echelon®, LONWORKS®, and the Echelon logo are trademarks of Echelon Corporation registered in the United States and other countries.
* BACnet® is a registered trademark of the American Society of Heating Refrigeration and Air Conditioning Engineers (ASHRAE).

Copyright© 2011-2013 Fujitsu General Limited. All rights reserved.

Product specifications are subject to change without notice.

Printed in Japan 2013.04.01