FUJITSU

SPLIT TYPE
AIR CONDITIONER
SIMULTANEOUS OPERATION
2-3 ROOM MULTI

SERVICE MANUAL

Refrigerant R410A

Outdoor unit	Indoor unit
AOYG36LATT	AUYG18LVLB ABYG18LVTB ARYG18LLTB
AOYG45LATT	AUYG22LVLA ABYG22LVTA ARYG22LMLA
AOYG54LATT	AUYG24LVLA ABYG24LVTA ARYG24LMLA
AOYG54LATT (Three room)	AUYG18LVLB ABYG18LVTB ARYG18LLTB

CONTENTS

SPECIFICATIONS 1
DIMENSIONS 5
REFRIGERANT CIRCUIT DIAGRAM 8
CIRCUIT DIAGRAM. 9
OUTDOOR PCB CIRCUIT DIAGRAM . . . 12
INDOOR PCB CIRCUIT DIAGRAM. 19
ERROR DETECTION 33
PARTS (OUTDOOR UNIT). 37
PARTS (INDOOR UNIT). 41
ACCESSORIES. 60

FUJITSU GENERAL LIMITED

SPECIFICATIONS

OUTDOOR UNIT

ELECTRICAL DATA

MODEL NAME		AOYG36LATT	AOYG45LATT	AOYG54LATT
POWER SOURCE		400 V, 50 Hz, 3 phase, 4 W		
STARTING CURRENT		10.0 A	10.0 A	10.0 A
AIR CIRCULATION	Cooling	6,200 m3/h	6,750 m3/h	6,900 m3/h
	Heating	6,200 m3/h	6,200 m3/h	6,900 m3/h

FAN MOTOR

DISCRIMINATION		MFE-54VVT		
COOLING	Upper fan	780 r.p.m.	850 r.p.m.	900 r.p.m.
	Lower fan	750 r.p.m.	800 r.p.m.	800 r.p.m.
HEATING	Upper fan	780 r.p.m.	780 r.p.m.	870 r.p.m.
	Lower fan	750 r.p.m.	750 r.p.m.	840 r.p.m.

NOISE LEVEL

COOLING	51 dB	54 dB	55 dB
HEATING	53 dB	54 dB	56 dB

COMPRESSOR AND REFRIGERANT

TYPE		Hermetic type, Inverter, 4 poles, 3 phase, DC motor, Twin Rotary
DISCRIMINATION		DA422A3F-29ZAD
WEIGHT (with oil)		23.0 kg
REFRIGERANT TYPE		R410A
PRECHARGED REFRIGERANT		3,450 g
MAX PIPE LENGTH (Total)		75 m
(Between Branch pipe and IU)		20 m
MAX PIPE HEIGHT (Between OU and IU)		30 m
(Between Indoor units)		0.5 m
FULL CHARGE Pipe length	30 m	3,450 g
	45 m	4,200 g
	60 m	4,950 g
	75 m	5,700 g
ADDITIONAL CHARGE		50 g/m

MEASUREMENT

DIMENSIONS	H x W x D	1,290 x 900 x 330 mm
WEIGHT	Shipping / Net	113 kg / 104 kg

INDOOR UNIT
CASSETTE

ELECTRICAL DATA

INDOOR UNIT	AUYG18LVLB	AUYG22LVLA	AUYG24LVLA
DECORATION PANEL	UTG-UFYD-W		
POWER SOURCE	400 V, 50 Hz, 3 phase, 4 W		

FAN MOTOR

DISCRIMINATION		MFF-24RVL	
AIRCIRCULATION HIGH		680 m3/h	1,030 m3/h
FAN SPEED Cooling	High	730 r.p.m.	1,050 r.p.m.
	Medium	630 r.p.m.	850 r.p.m.
	Low	540 r.p.m.	650 r.p.m.
	Quiet	460 r.p.m.	500 r.p.m.
FAN SPEED Heating	High	830 r.p.m.	1,030 r.p.m.
	Medium	730 r.p.m.	880 r.p.m.
	Low	630 r.p.m.	740 r.p.m.
	Quiet	500 r.p.m.	580 r.p.m.

DIMENSIONS

DECORATION PANEL H x W x D	49 x 700 x 700 mm
INDOOR UNIT H x W x D	245 x 570 x 570 mm

WEIGHT

DECORATION PANEL Shipping / Net	4.5 kg / 2.6 kg	
INDOOR UNIT Shipping / Net	18 kg / 15 kg	19 kg / 16 kg

INDOOR UNIT
CEILING

ELECTRICAL DATA

INDOOR UNIT	ABYG18LVTB	ABYG22LVTA	ABYG24LVTA
POWER SOURCE	400 V, 50 Hz, 3 phase, 4 W		

FAN MOTOR

DISCRIMINATION		MFH-24RVL	
AIRCIRCULATION HIGH		780 m3/h	980 m3/h
FAN SPEED Cooling	High	1,040 r.p.m.	1,330 r.p.m.
	Medium	950 r.p.m.	1,150 r.p.m.
	Low	800 r.p.m.	1,000 r.p.m.
	Quiet	740 r.p.m.	780 r.p.m.
FAN SPEED Heating	High	1,040 r.p.m.	1,300 r.p.m.
	Medium	950 r.p.m.	1,150 r.p.m.
	Low	800 r.p.m.	1,000 r.p.m.
	Quiet	740 r.p.m.	780 r.p.m.

MEASUREMENT

DIMENSIONS	H x W x D	199 x 990 x 655 mm
WEIGHT	Shipping / Net	36 kg / 27 kg

INDOOR UNIT
DUCT

ELECTRICAL DATA

INDOOR UNIT	ARYG18LLTB	ARYG22LMLA	ARYG24LMLA
POWER SOURCE	400 V, 50 Hz, 3 phase, 4 W		

FAN MOTOR

DISCRIMINATION		MFG-24WVA	MFG-24RVA
AIRCIRCULATION HIGH		940 m3/h	1,100 m3/h
FAN SPEED	High	1,380 r.p.m.	830 r.p.m.
	Medium	1,300 r.p.m.	700 r.p.m.
	Low	1,220 r.p.m.	600 r.p.m.
	Quiet	1,140 r.p.m.	550 r.p.m.

MEASUREMENT

DIMENSIONS H x W x D	198 x 900 x 620 mm	270 x 1,135 x 700 mm
WEIGHT Shipping / Net	30 kg / 23 kg	44 kg / 38 kg

DIMENSIONS

OUTDOOR UNIT
(unit : mm)

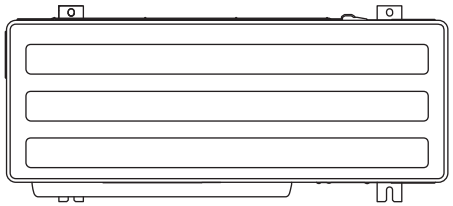

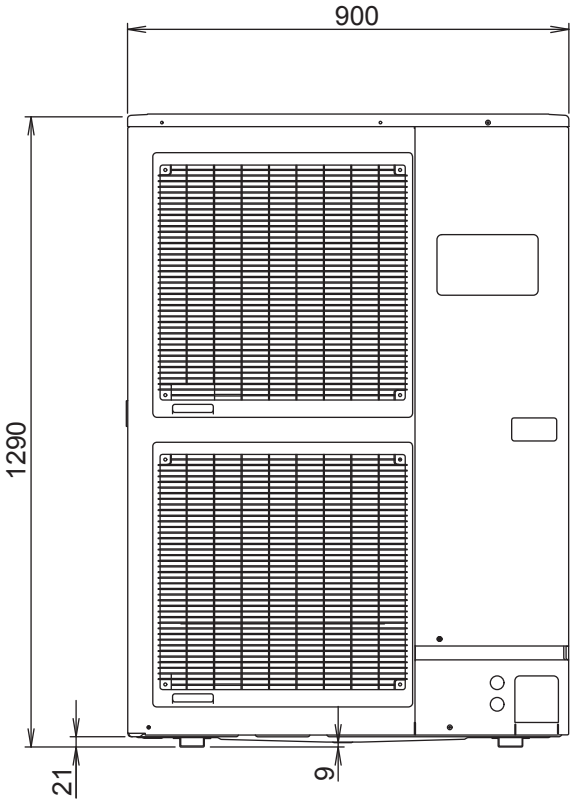

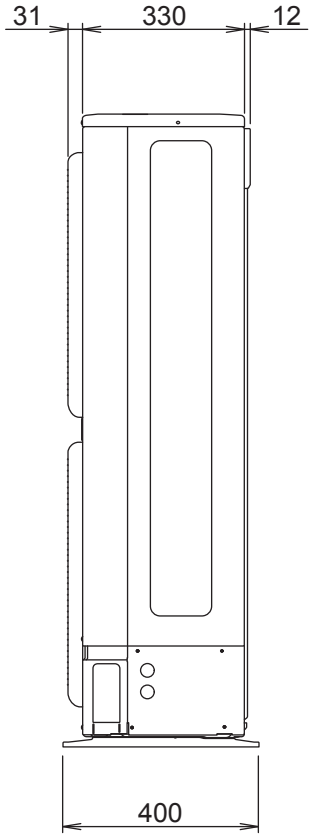

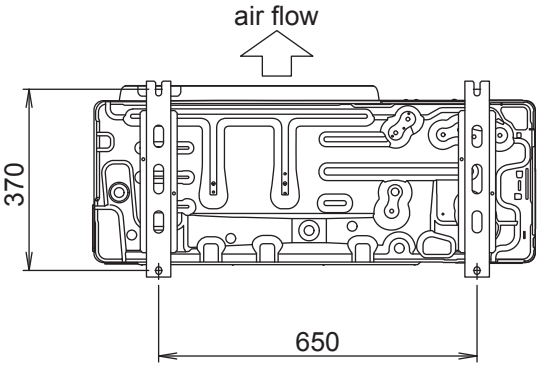

BRANCH PIPE
UTP-SX254A

Gas pipe

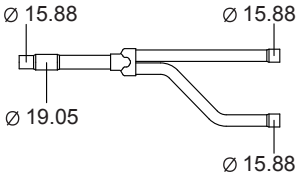

Liquid pipe

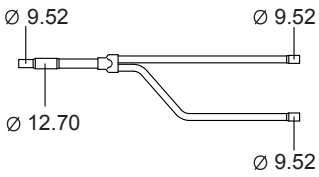

Insulation

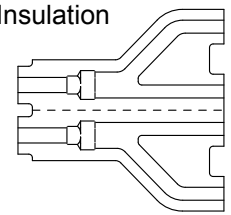

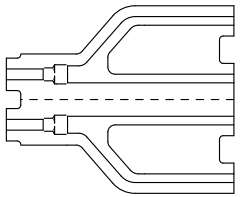

BRANCH PIPE
UTP-SX354A

Gas pipe

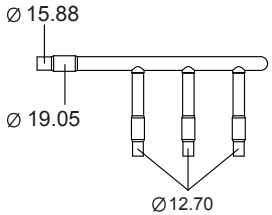

Liquid pipe

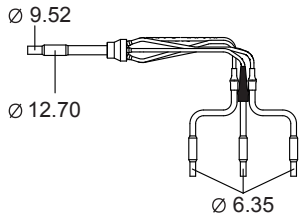

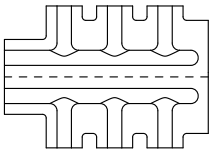

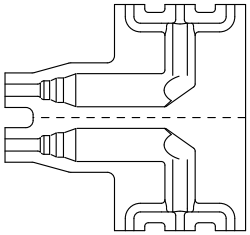

INDOOR UNIT
CASSETTE
AUYG18LVLB
AUYG22LVLA
AUYG24LVLA
Unit : mm

DECORATION
PANEL

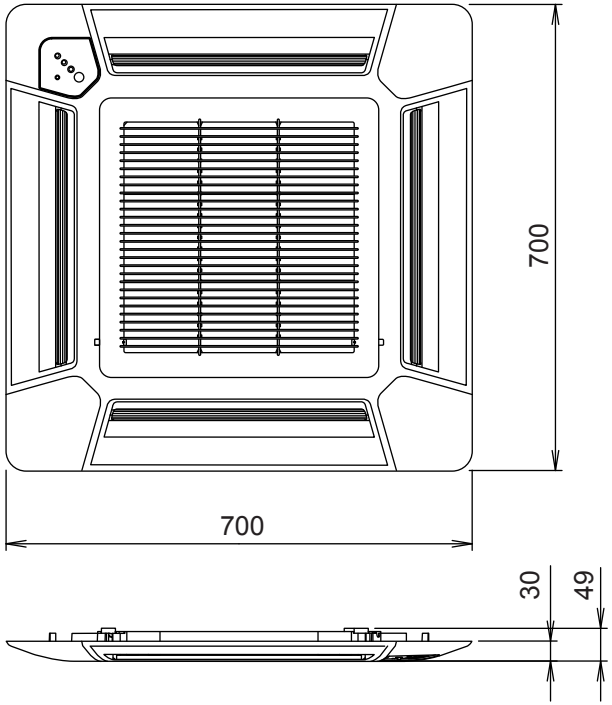

INDOOR
UNIT

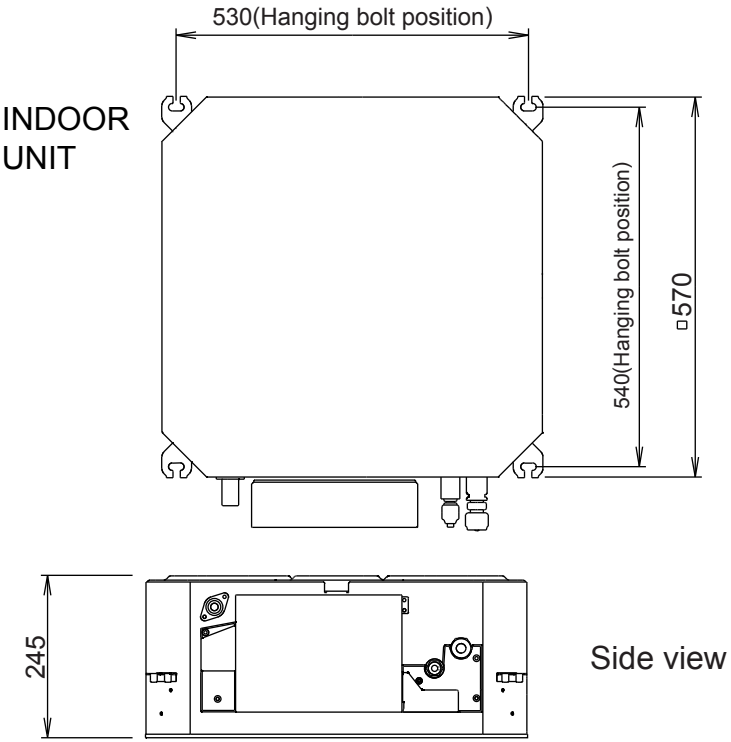

Top view

Side view

INDOOR UNIT
CEILING
ABYG18LVTB
ABYG22LVTA
ABYG24LVTA
Unit : mm

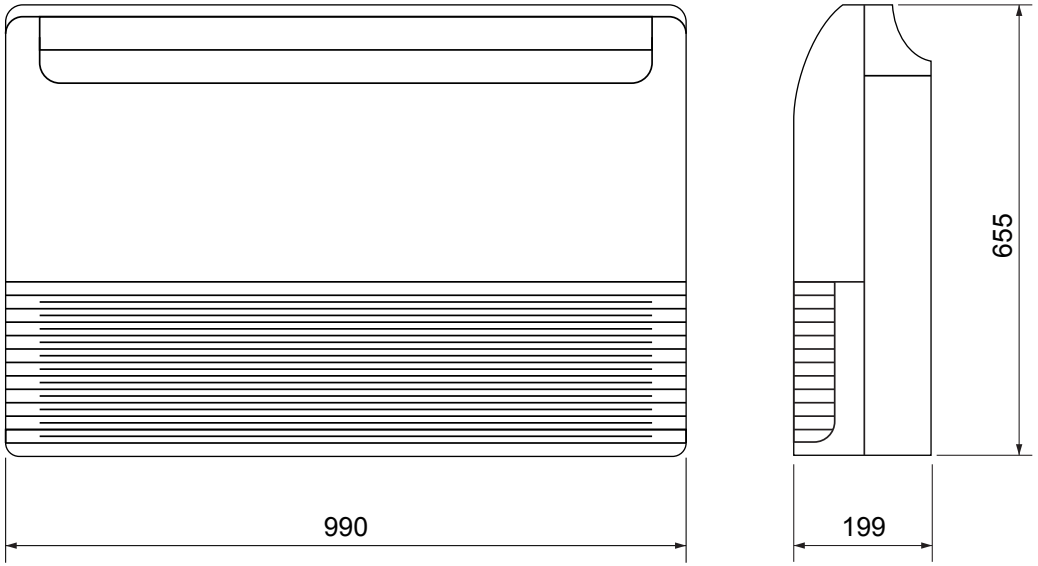

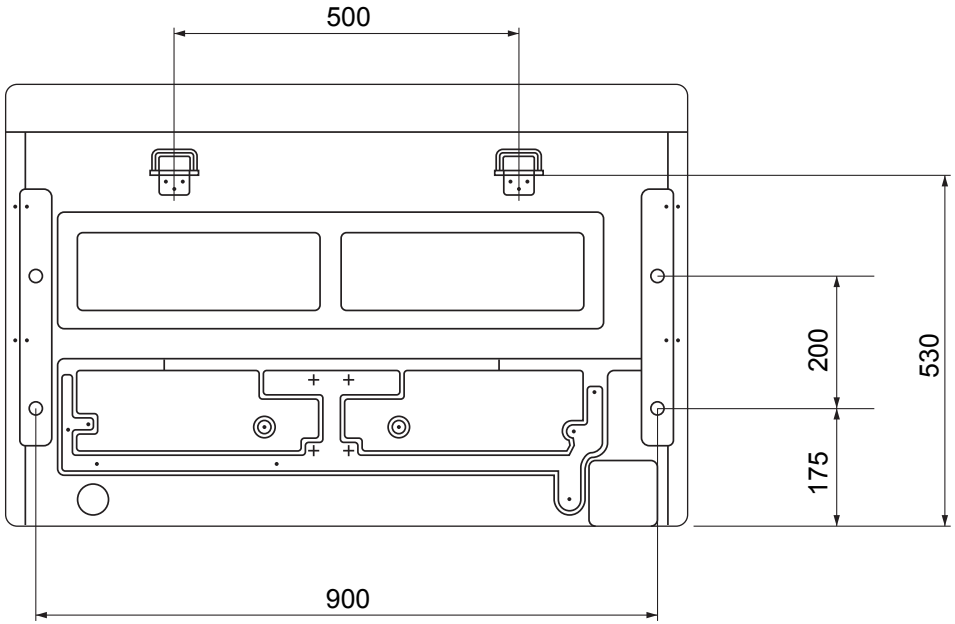

INDOOR UNIT
SLIM DUCT
ARYG18LLTB
Unit : mm

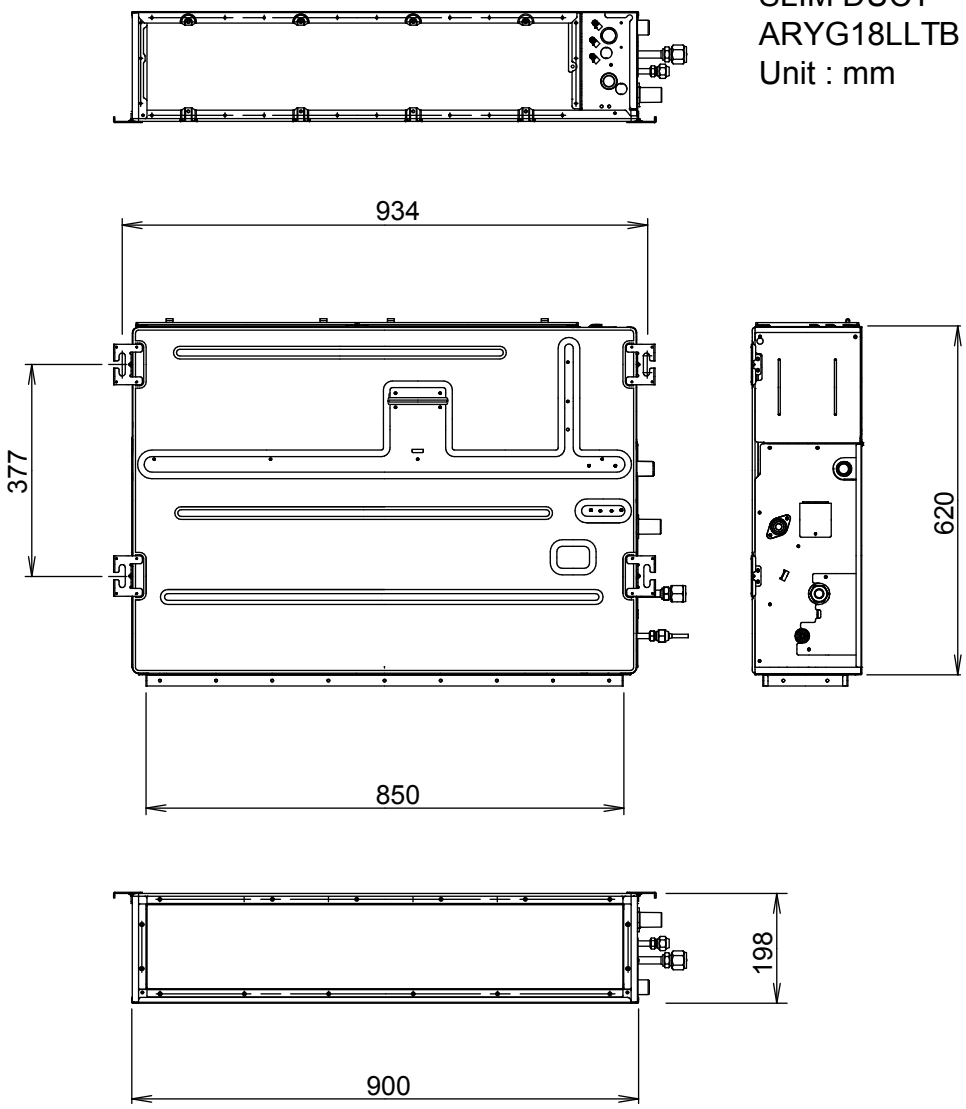

INDOOR UNIT
DUCT
ARYG22LMLA
ARYG24LMLA
Unit : mm

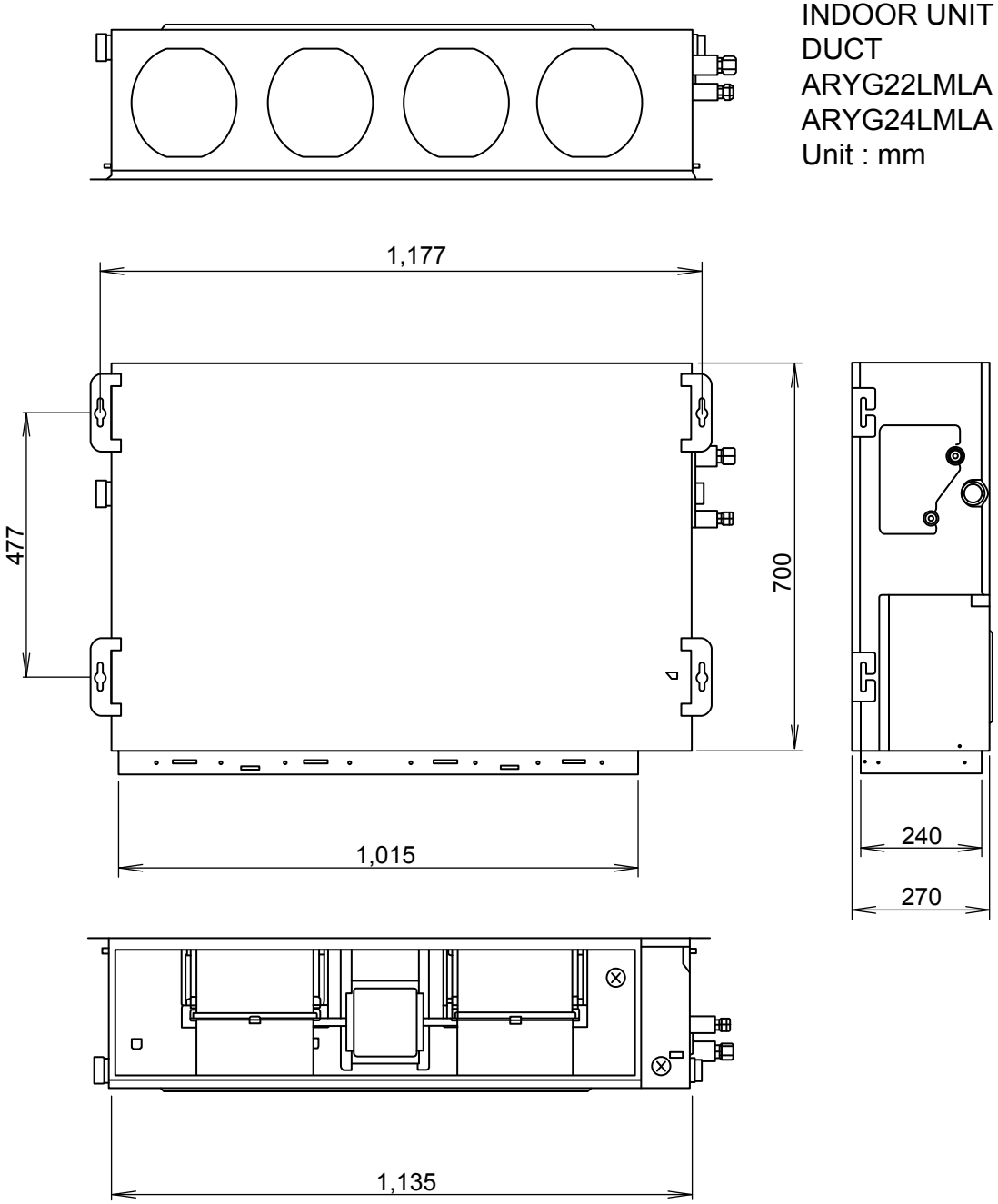

REFRIGERANT SYSTEM DIAGRAM

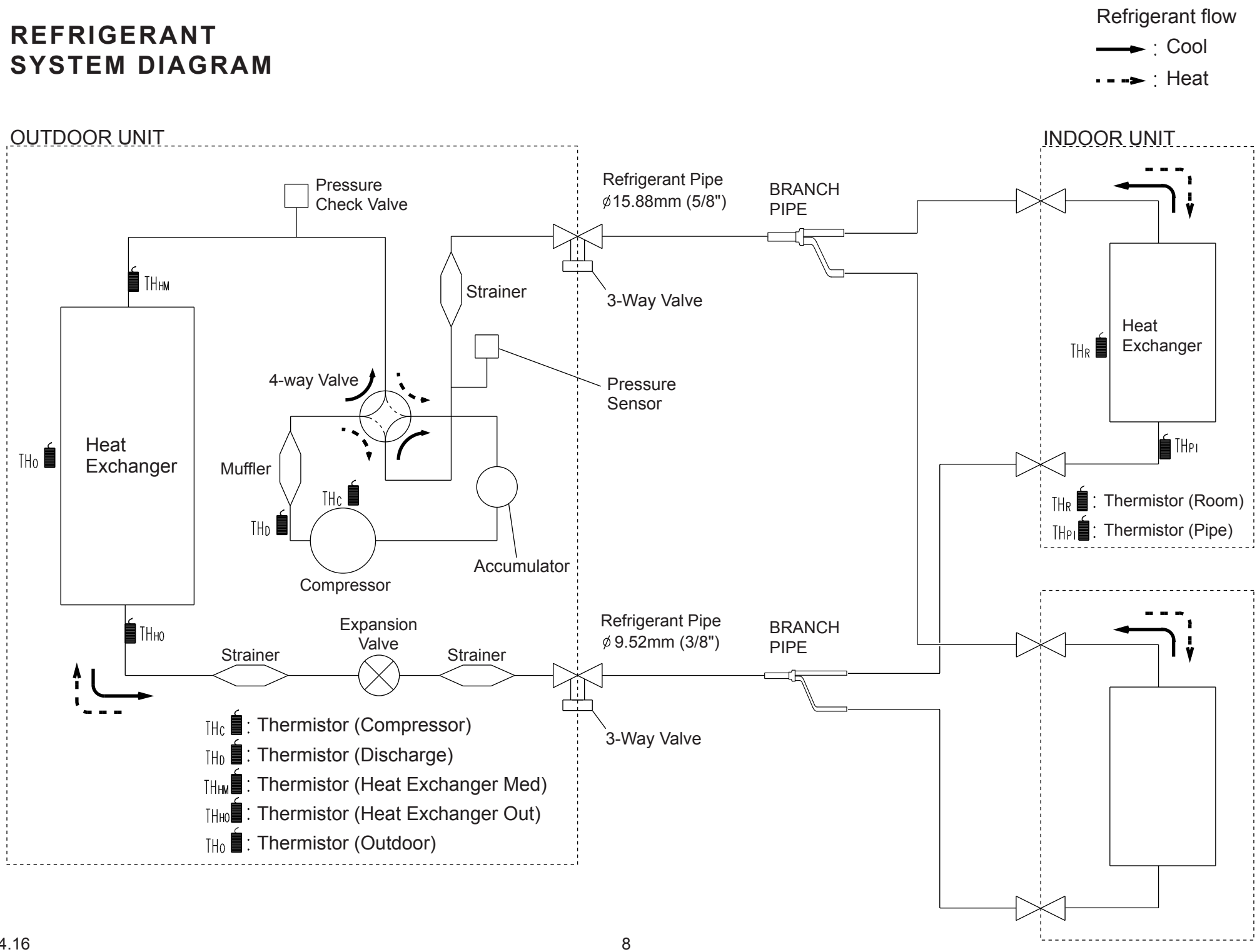

CIRCUIT DIAGRAM

OUTDOOR UNIT

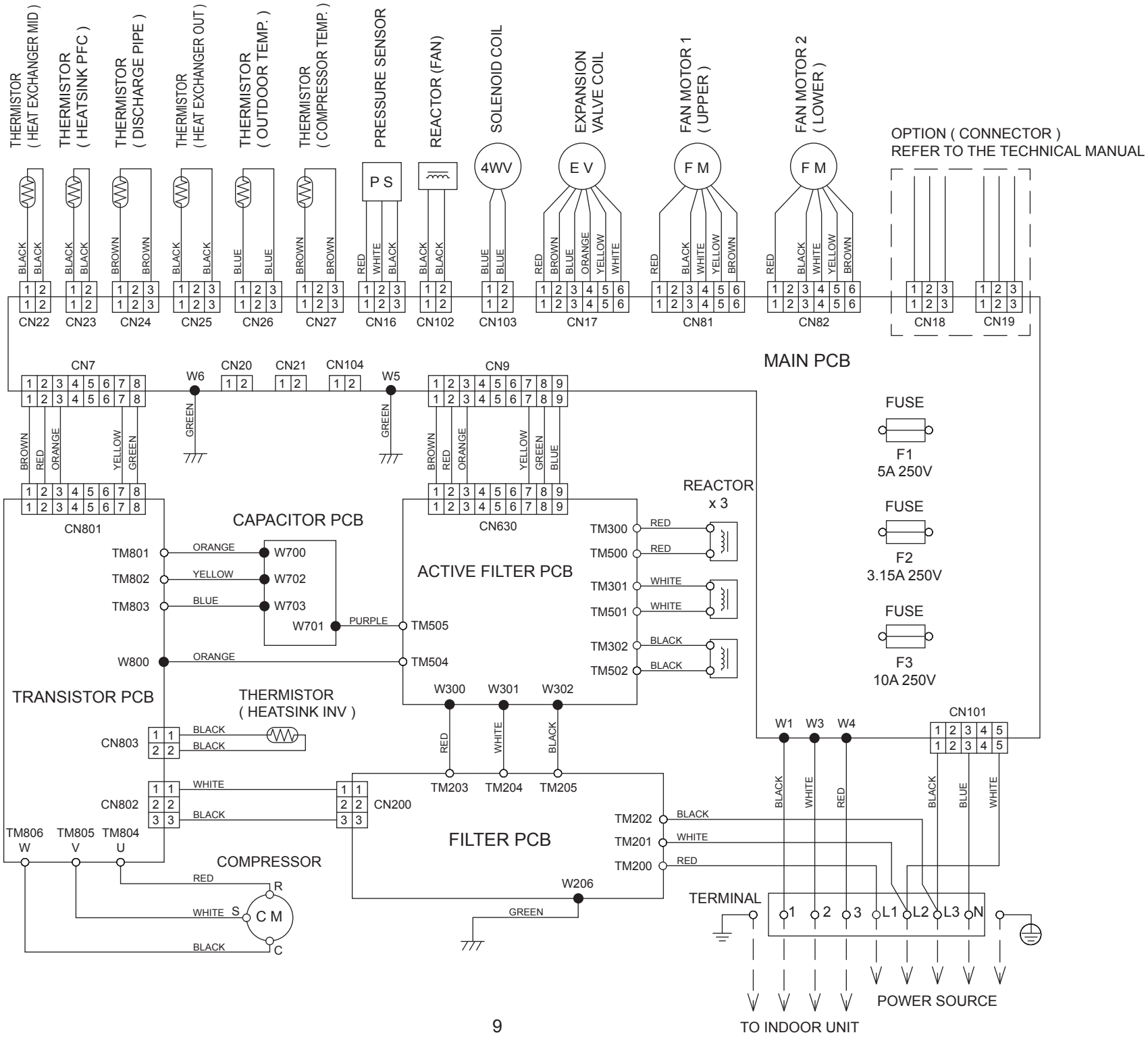

INDOOR UNIT
CASSETTE
AUYG18LVLB
AUYG22LVLA
AUYG24LVLA

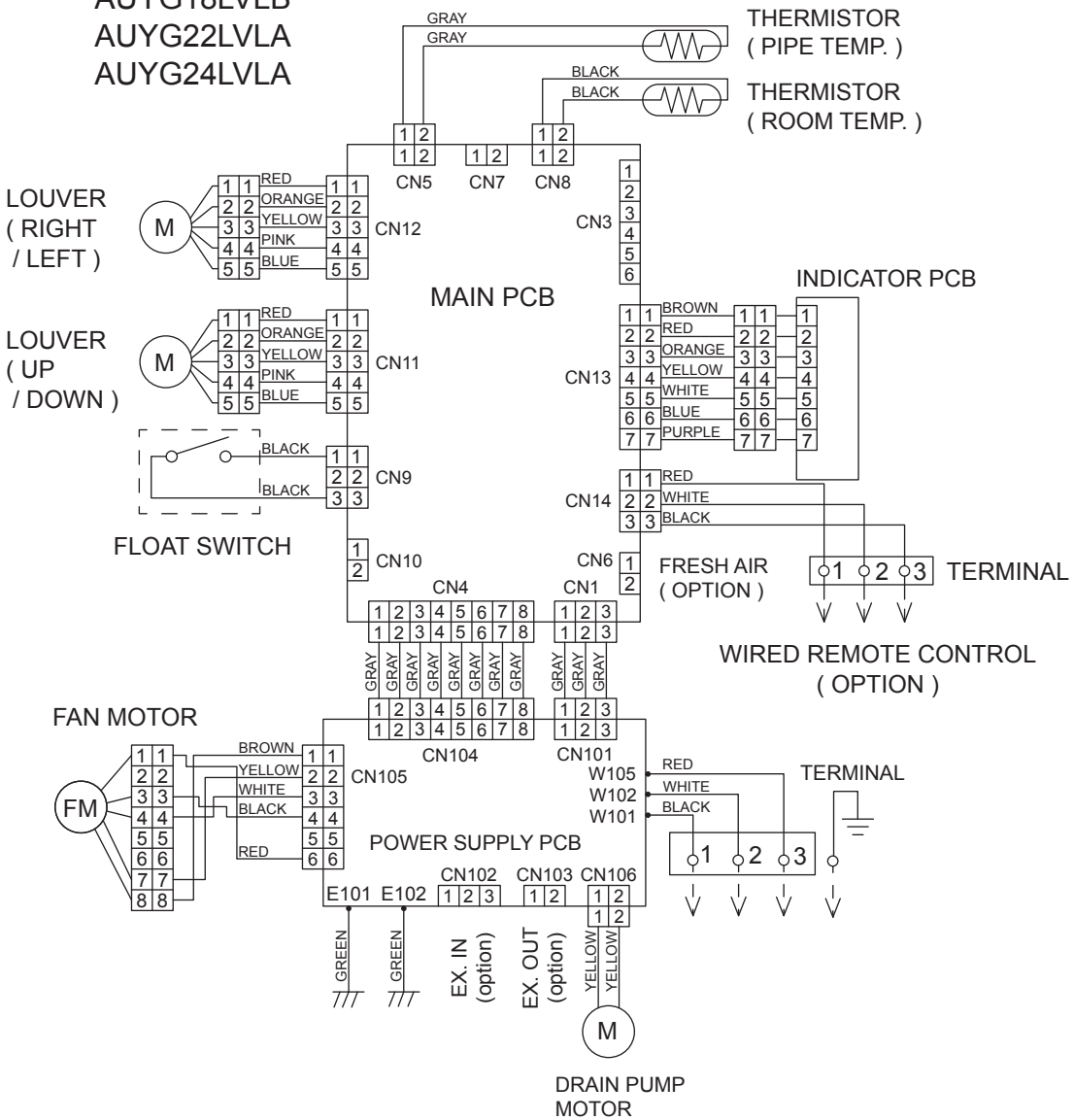

INDOOR UNIT
CEILING
ABYG18LVTB
ABYG22LVTA
ABYG24LVTA

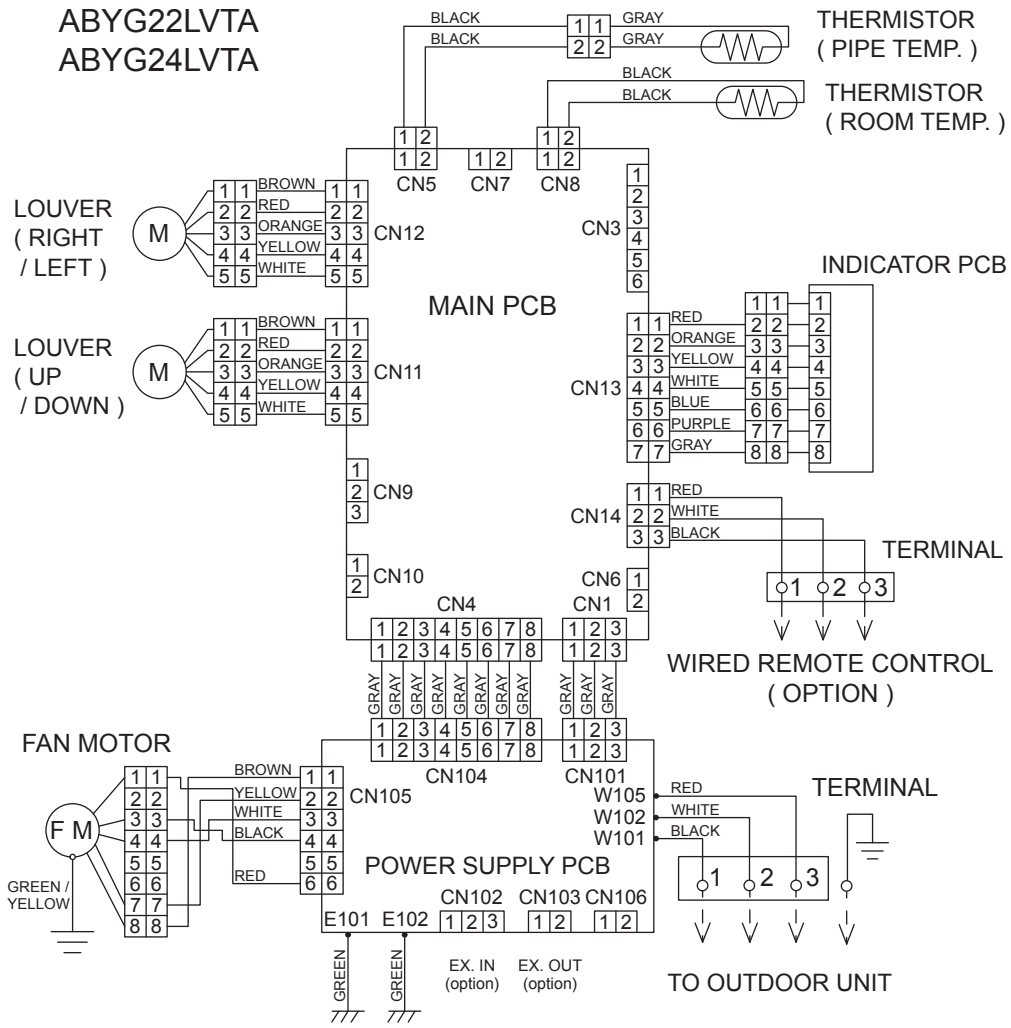

INDOOR UNIT SLIM DUCT ARYG18LLTB

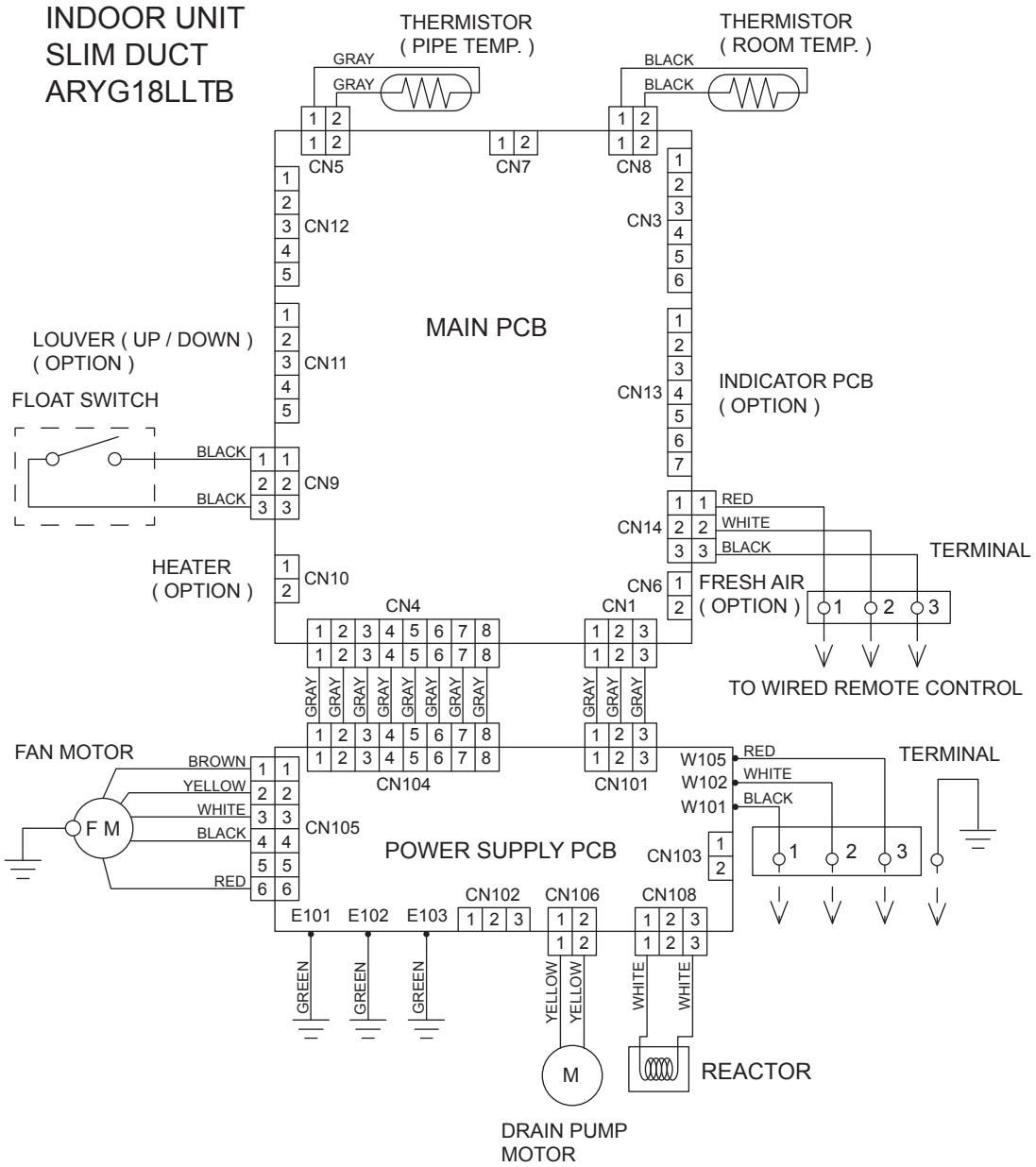

INDOOR UNIT DUCT ARYG22LMLA ARYG24LMLA

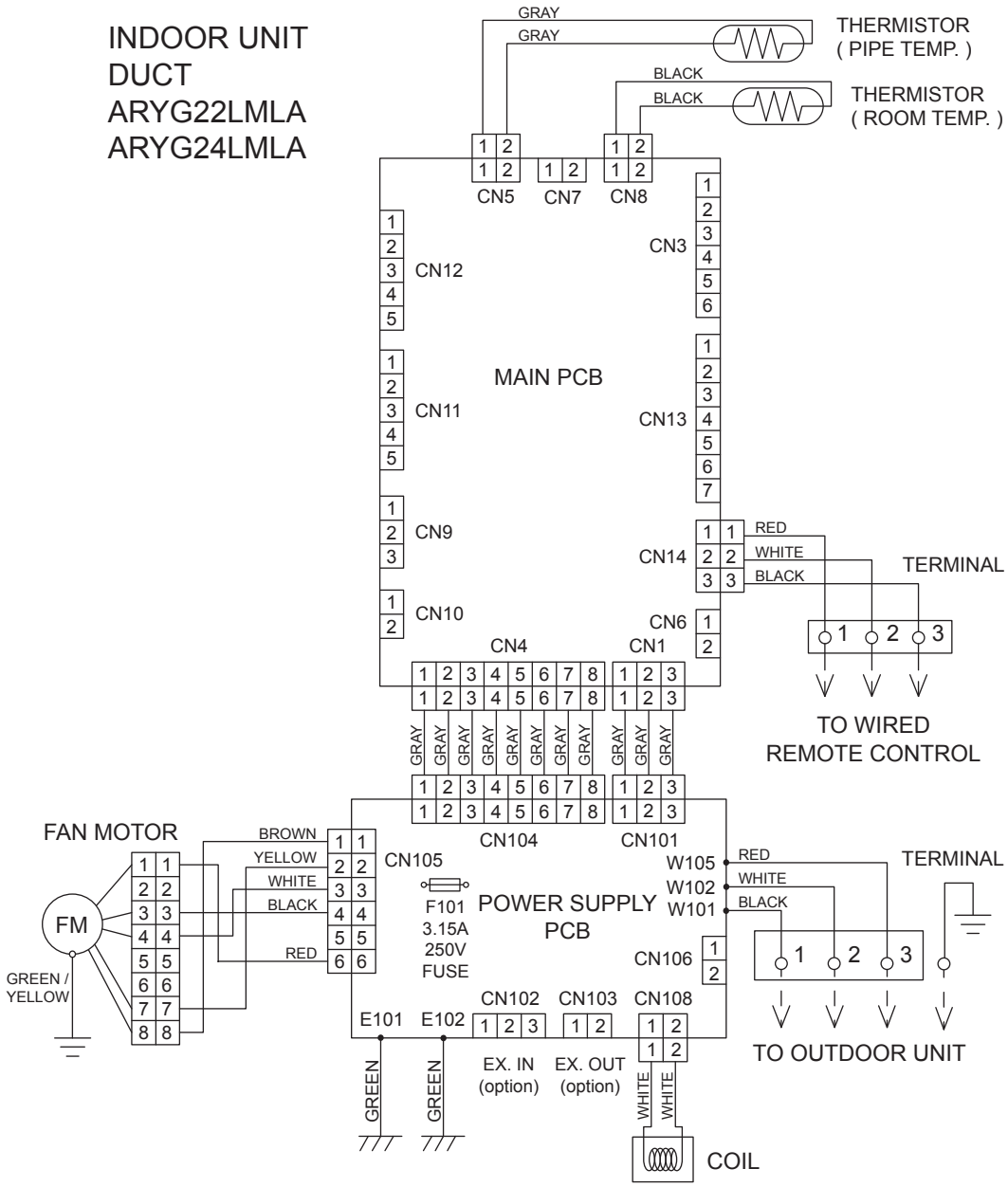

OUTDOOR PCB CIRCUIT DIAGRAM

INVERTER ASSEMBLY
AOYG36LATT : EZ-01222HUE
AOYG45LATT : EZ-0111WHUE
AOYG54LATT : EZ-0111YHUE

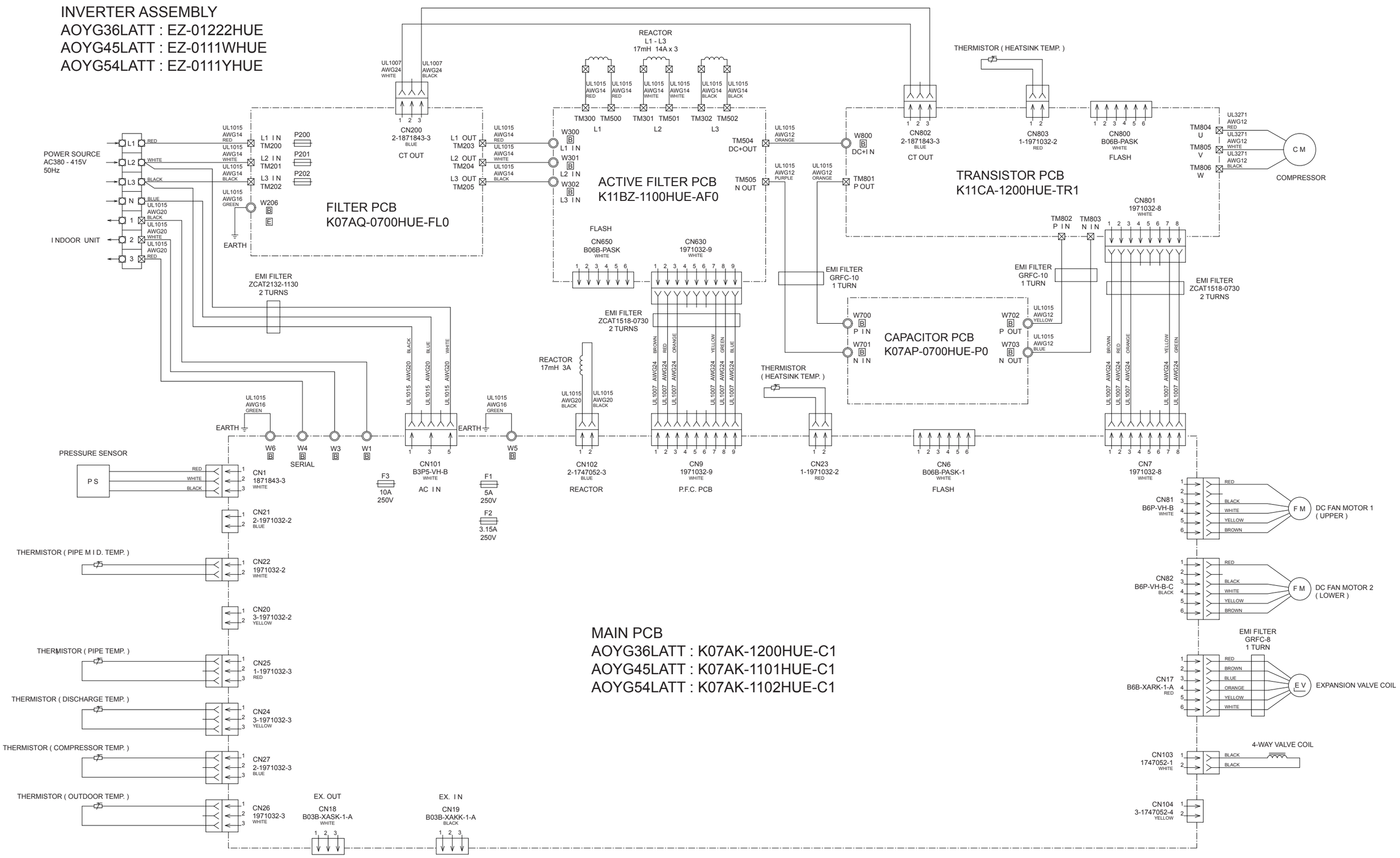

MAIN PCB
AOYG36LATT : K07AK-1200HUE-C1
AOYG45LATT : K07AK-1101HUE-C1
AOYG54LATT : K07AK-1102HUE-C1

OUTDOOR UNIT
MAIN PCB
AOYG36LATT : K07AK-1200HUE-C1
AOYG45LATT : K07AK-1101HUE-C1
AOYG54LATT : K07AK-1102HUE-C1

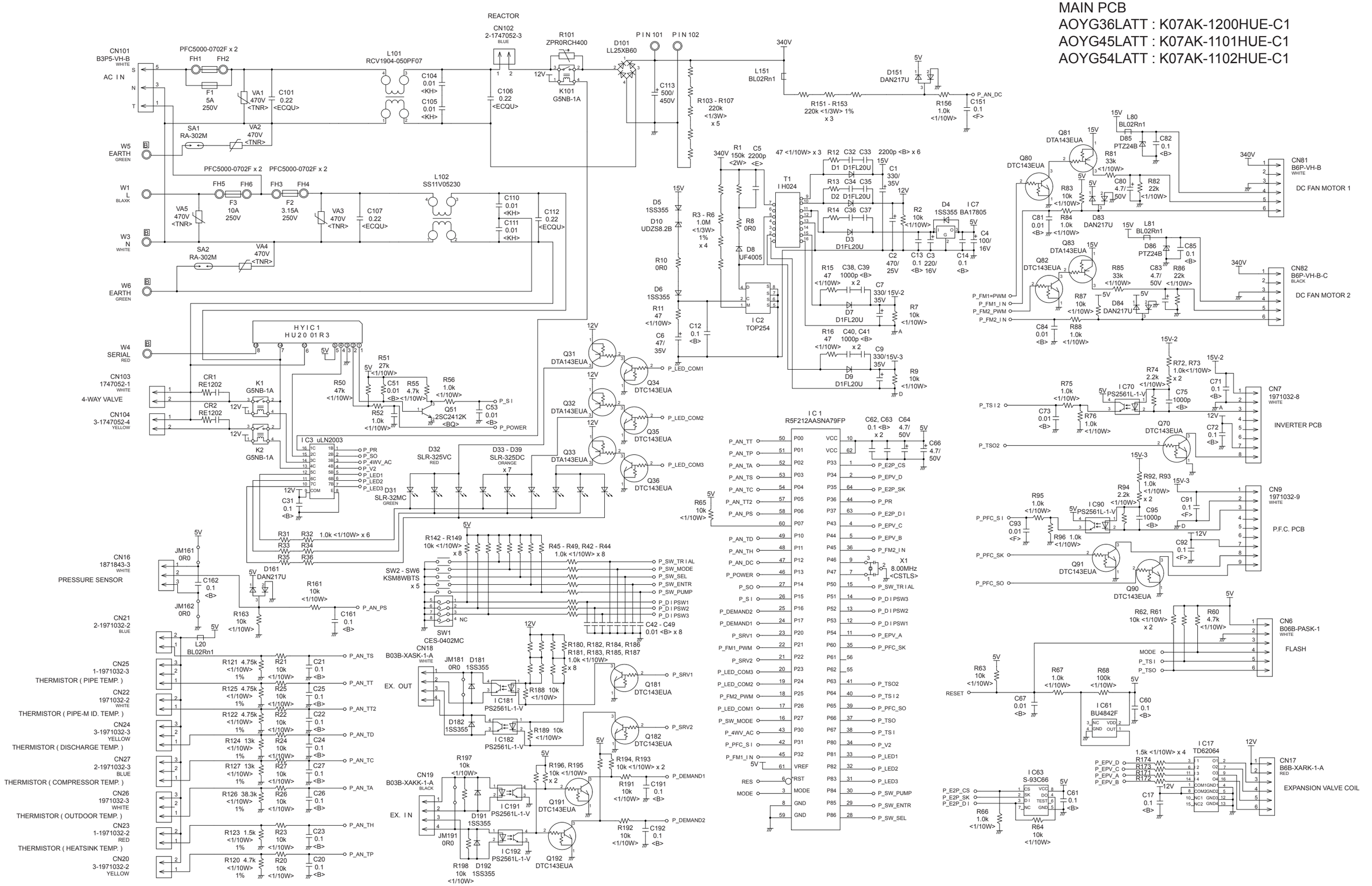

OUTDOOR UNIT
TRANSISTOR PCB
K11CA-1200HUE-TR1

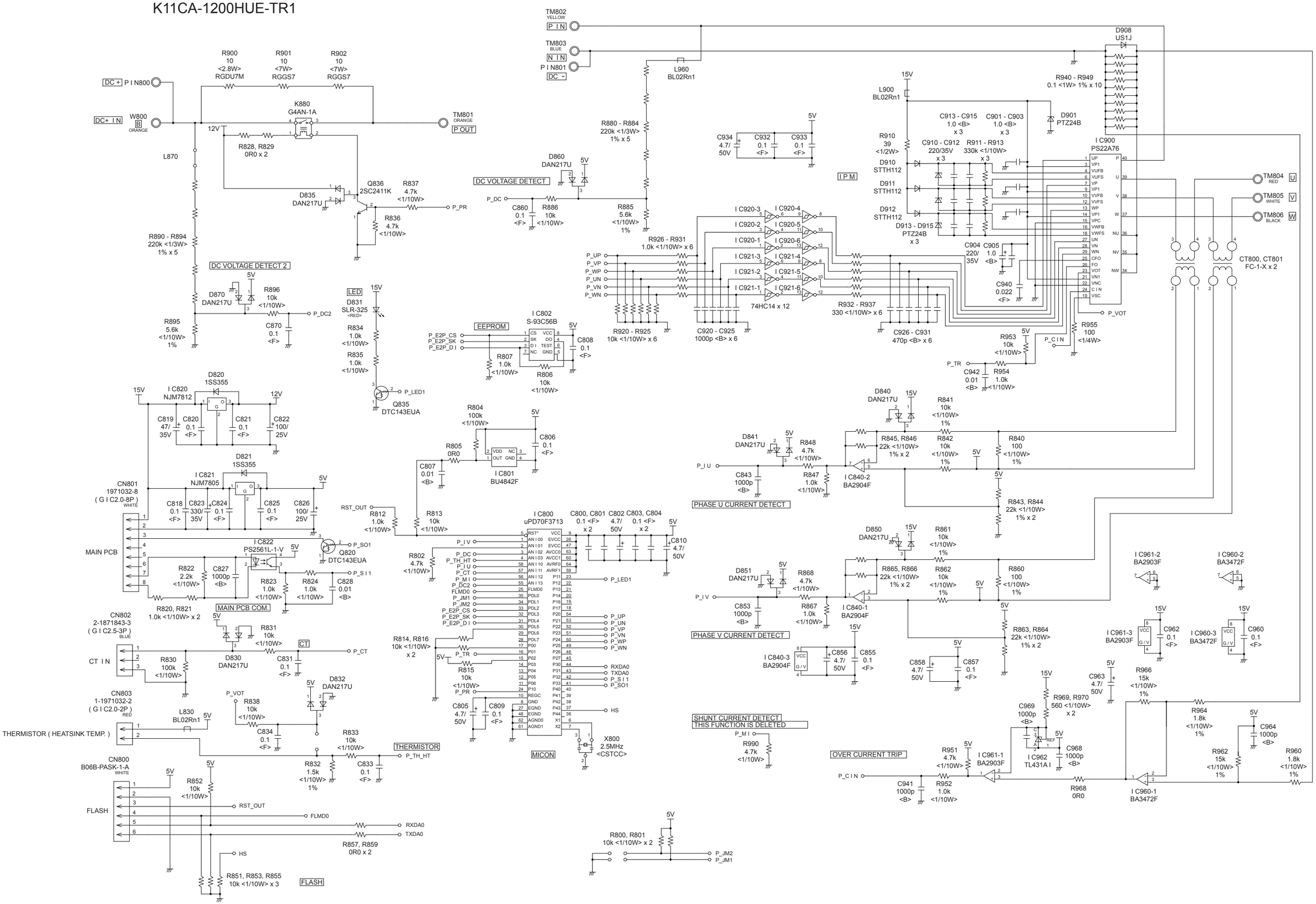

OUTDOOR UNIT
ACTIVE FILTER PCB - 1
K-11BZ-1100HUE-AF0

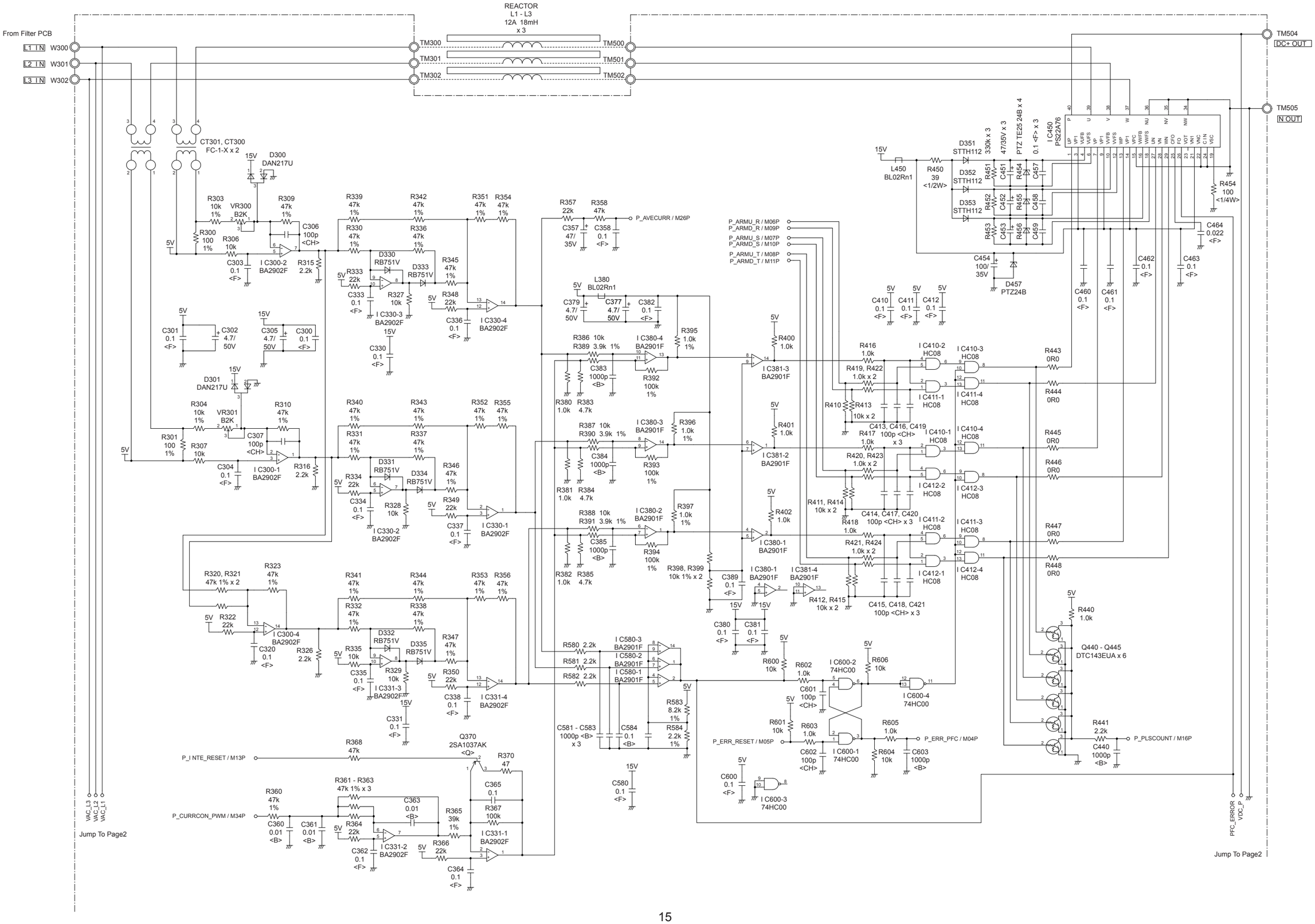

OUTDOOR UNIT
ACTIVE FILTER PCB - 2
K11BZ-1100HUE-AF0

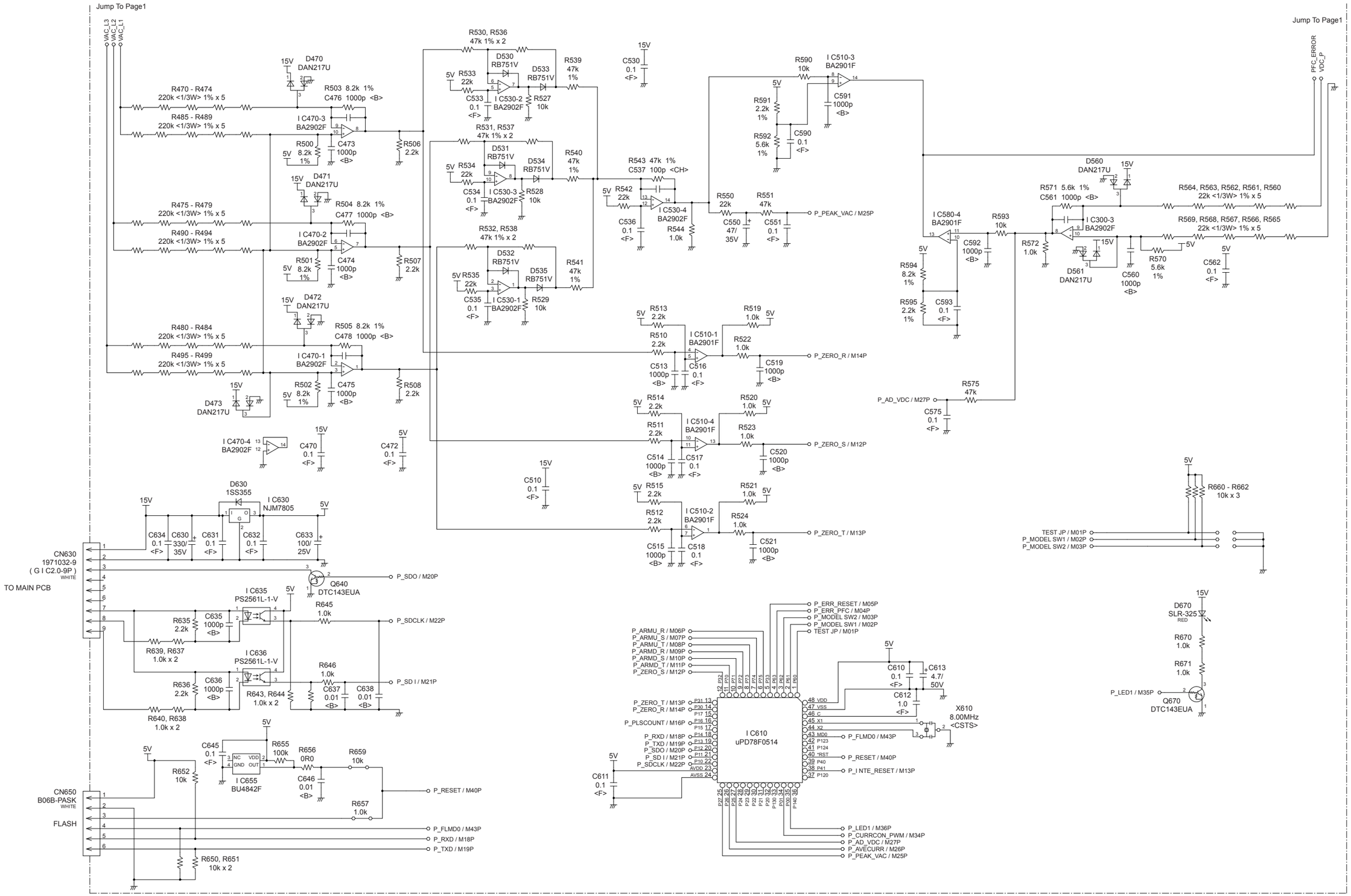

OUTDOOR UNIT
FILTER PCB
K07AQ-0700HUE-FL0

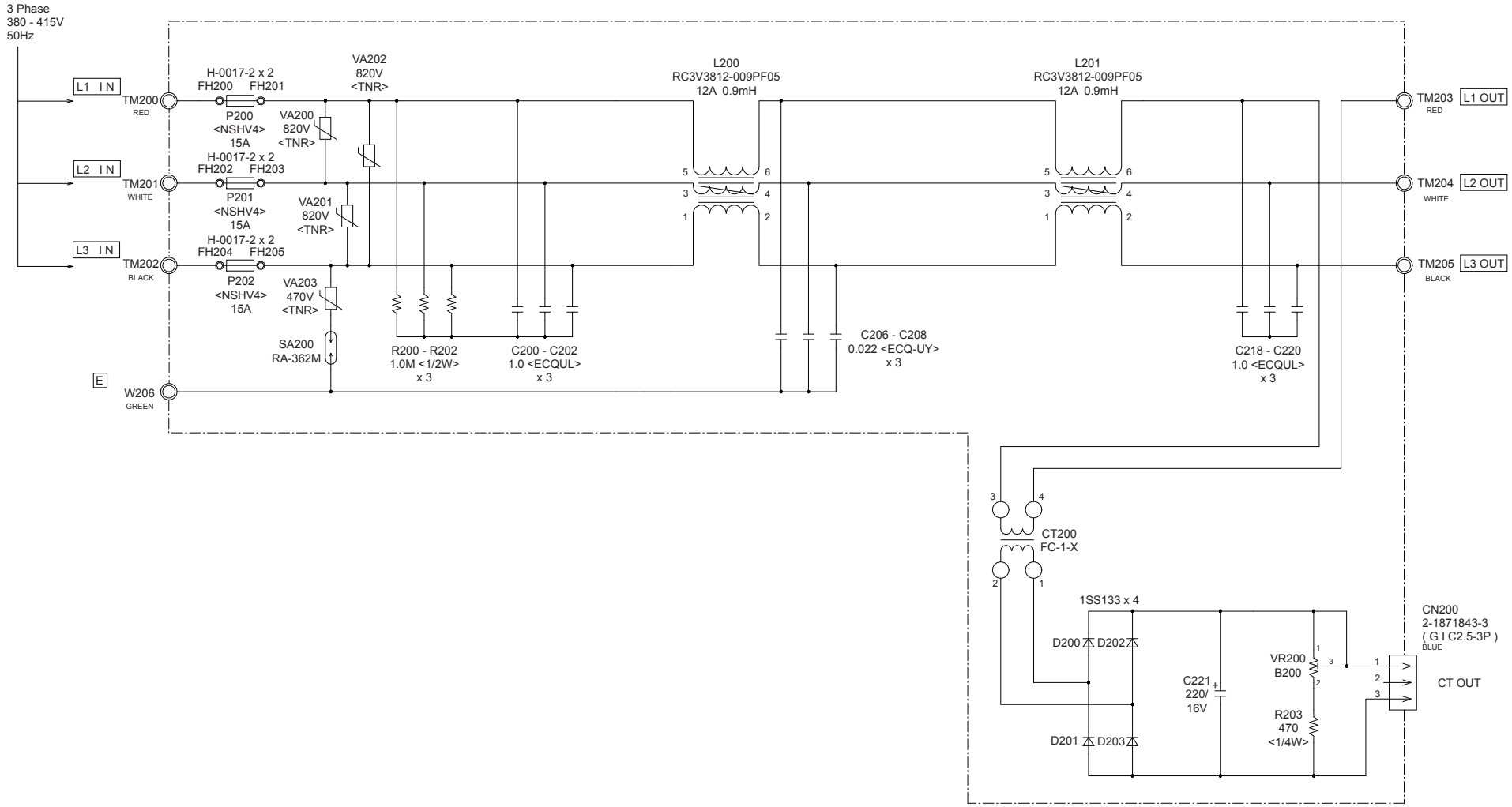

OUTDOOR UNIT
CAPACITOR PCB
K07AP-0700HUE-P0

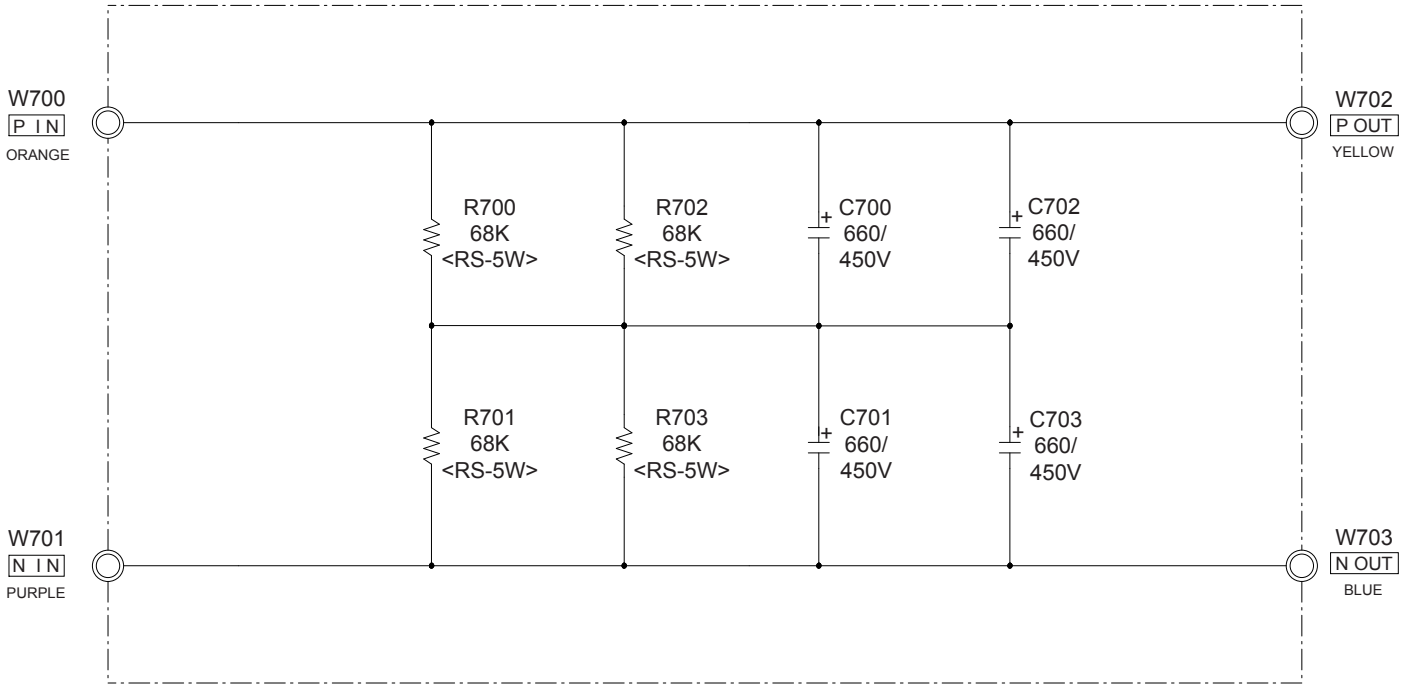

INDOOR PCB
CIRCUIT DIAGRAM

CASSETTE
CONTROL UNIT
AUYG18LVLB : EZ-0122LHSE
AUYG22LVLA : EZ-01230HSE
AUYG24LVLA : EZ-0122MHSE

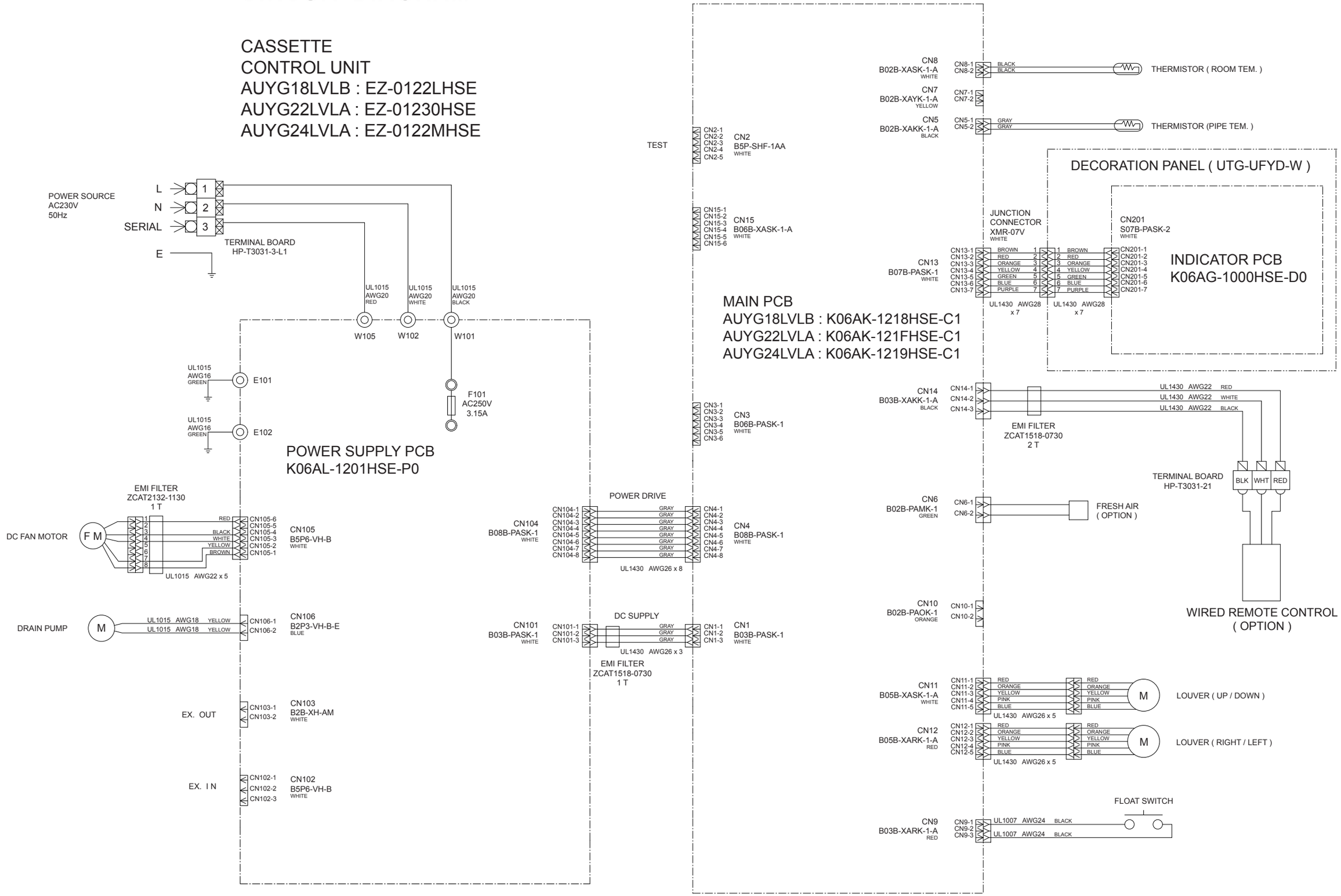

INDOOR UNIT
CASSETTE
MAIN PCB
AUYG18LVLB : K06AK-1218HSE-C1
AUYG22LVLA : K06AK-121FHSE-C1
AUYG24LVLA : K06AK-1219HSE-C1

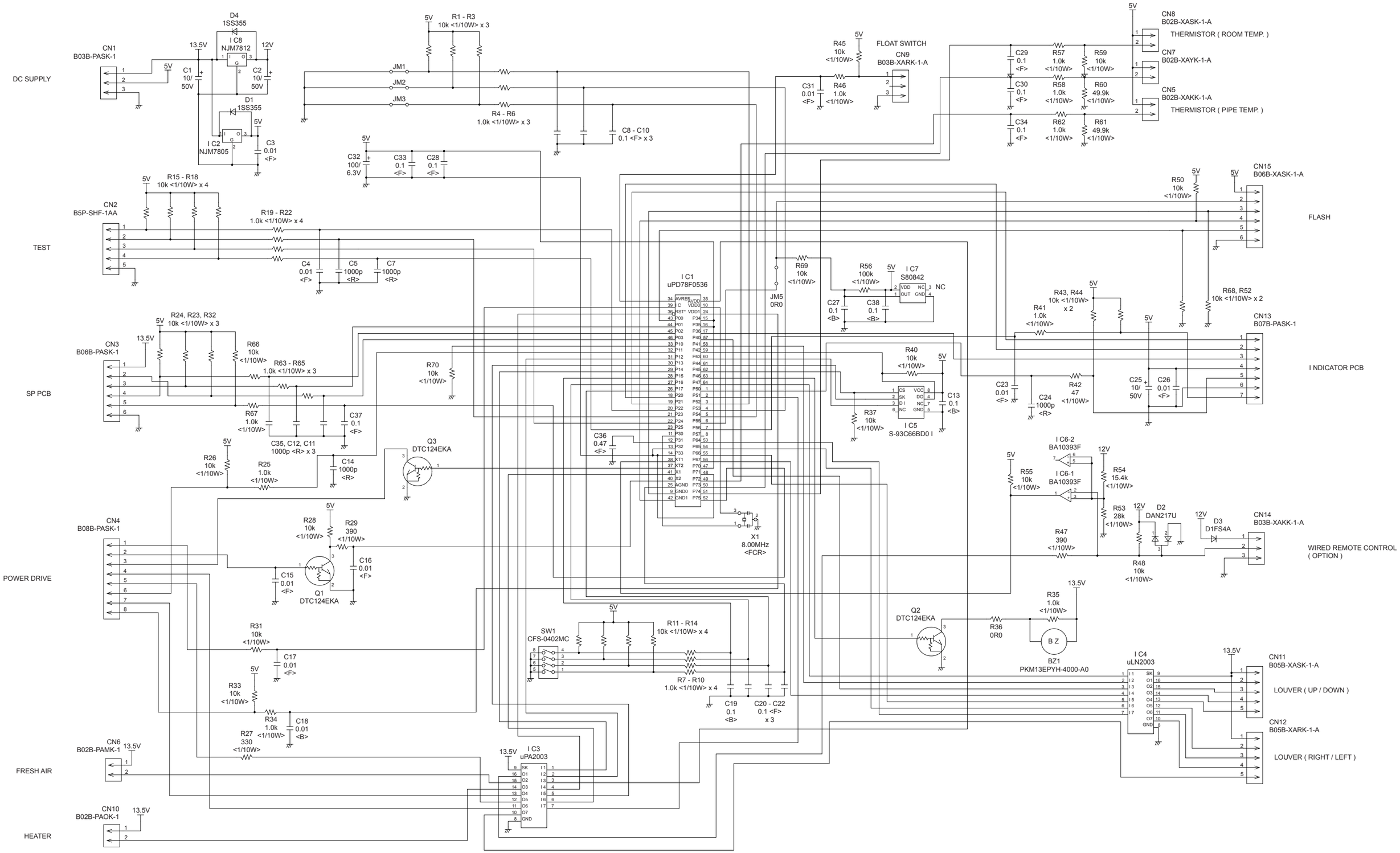

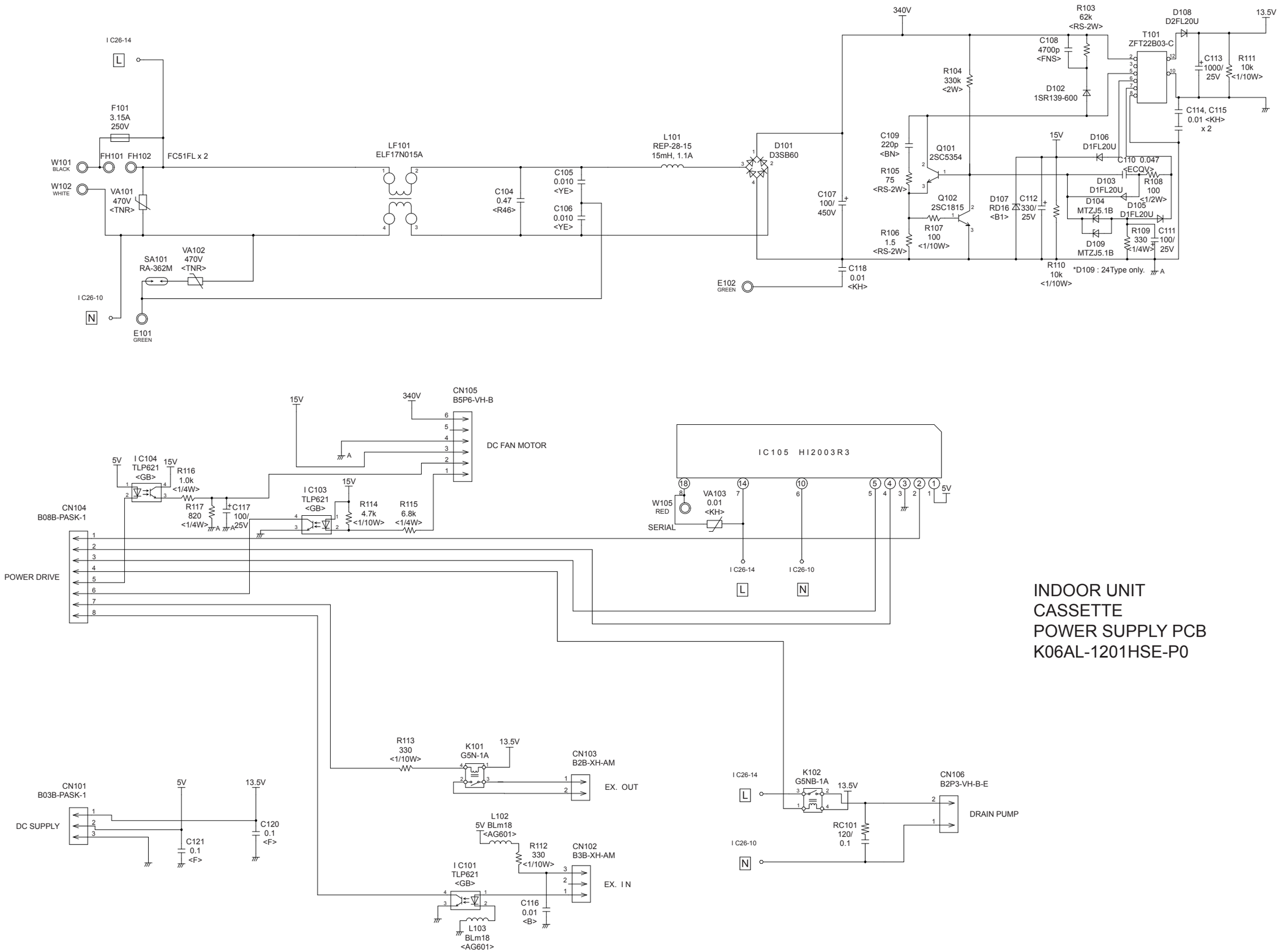

INDOOR UNIT
CASSETTE
POWER SUPPLY PCB
K06AL-1201HSE-P0

INDOOR UNIT
CASSETTE
AUYG18LVLB
AUYG22LVLA
AUYG24LVLA

INDICATOR PCB
K06AG-1000HSE-D0

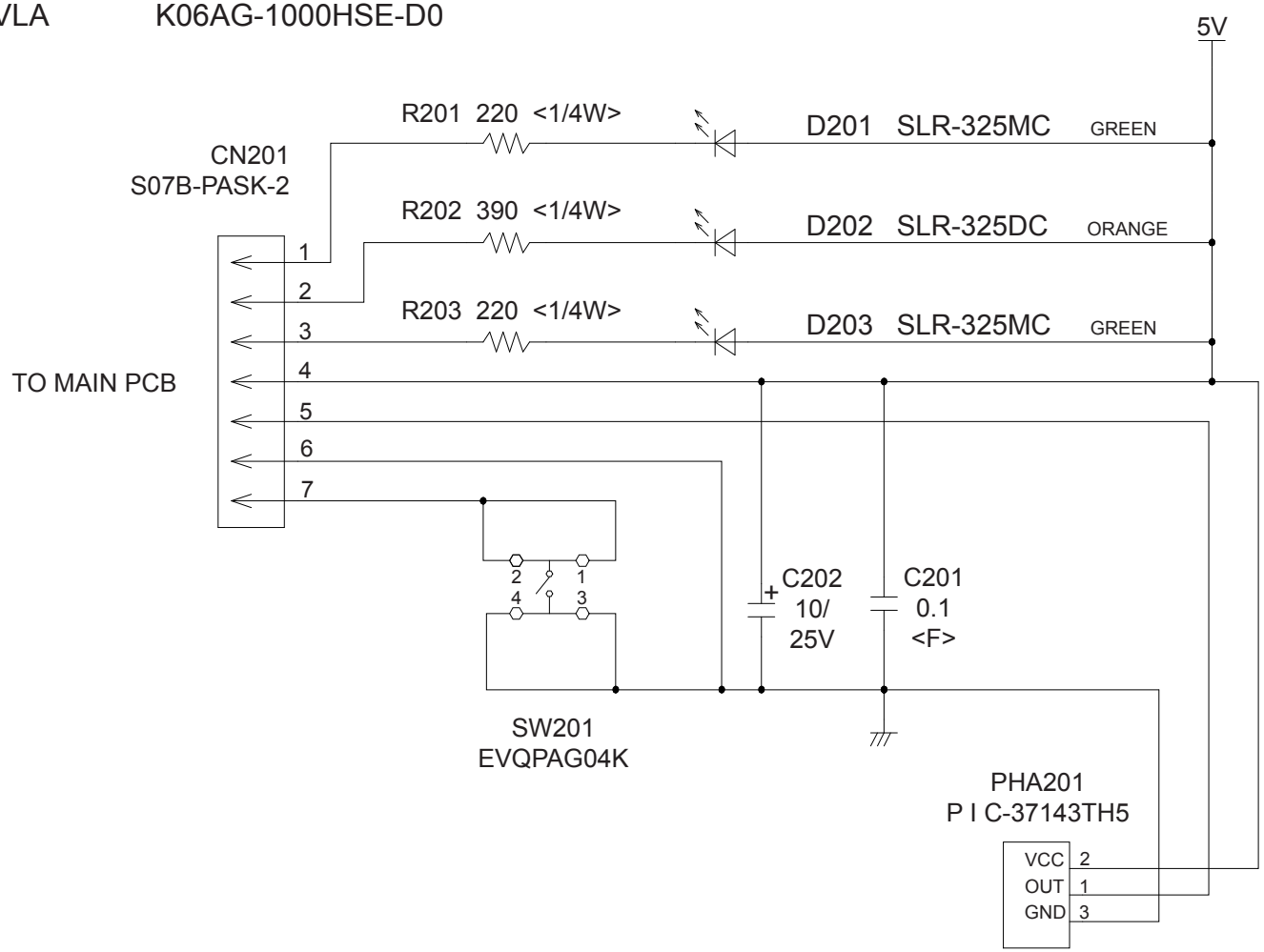

INDOOR PCB
CIRCUIT DIAGRAM

CEILING
CONTROL UNIT
ABYG18LVTB : EZ-0122BHSE
ABYG22LVTA : EZ-0122YHSE
ABYG24LVTA : EZ-0122CHSE

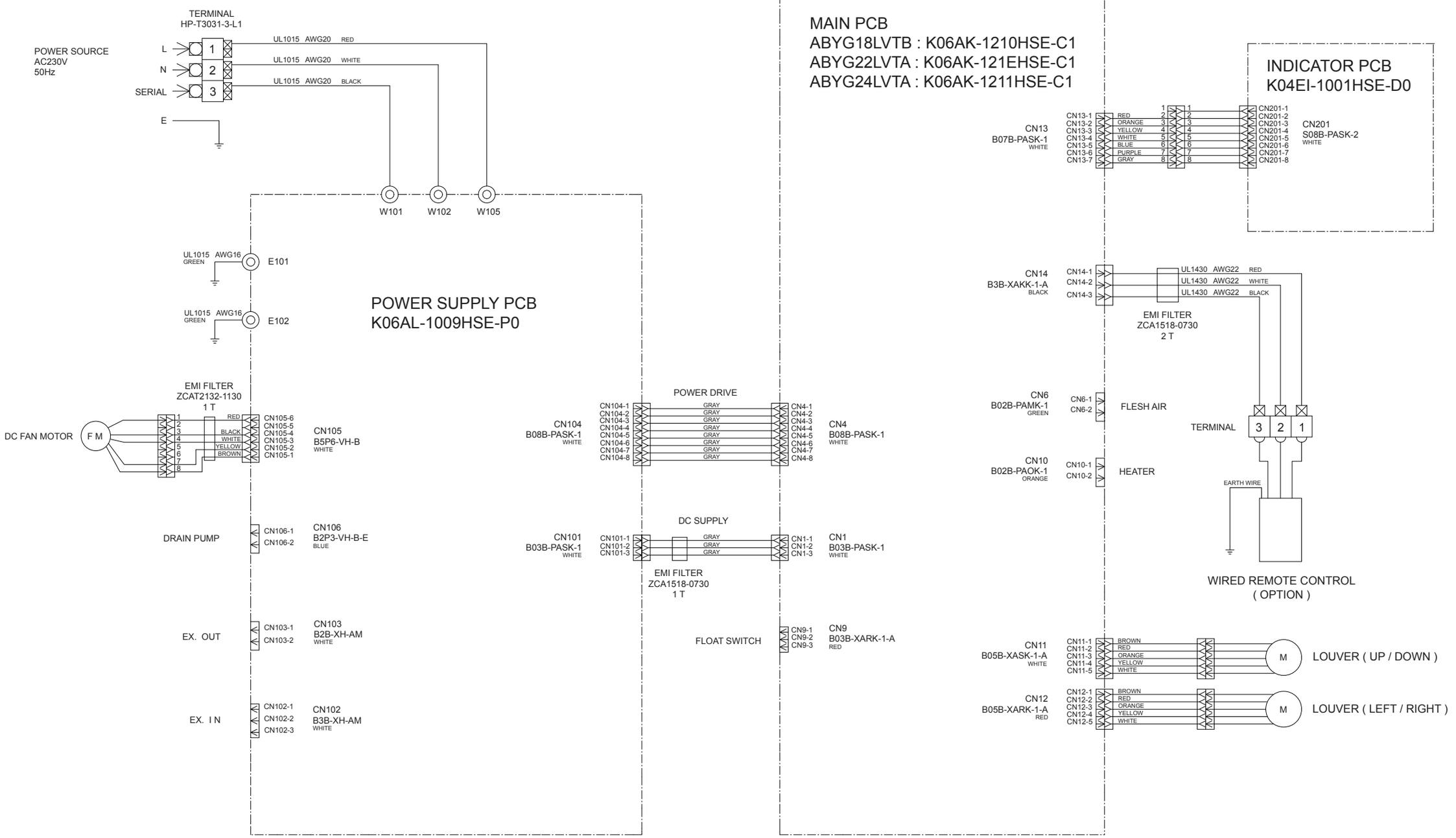

INDOOR UNIT
CEILING
MAIN PCB
ABYG18LVTB : K06AK-1210HSE-C1
ABYG22LVTA : K06AK-121EHSE-C1
ABYG24LVTA : K06AK-1211HSE-C1

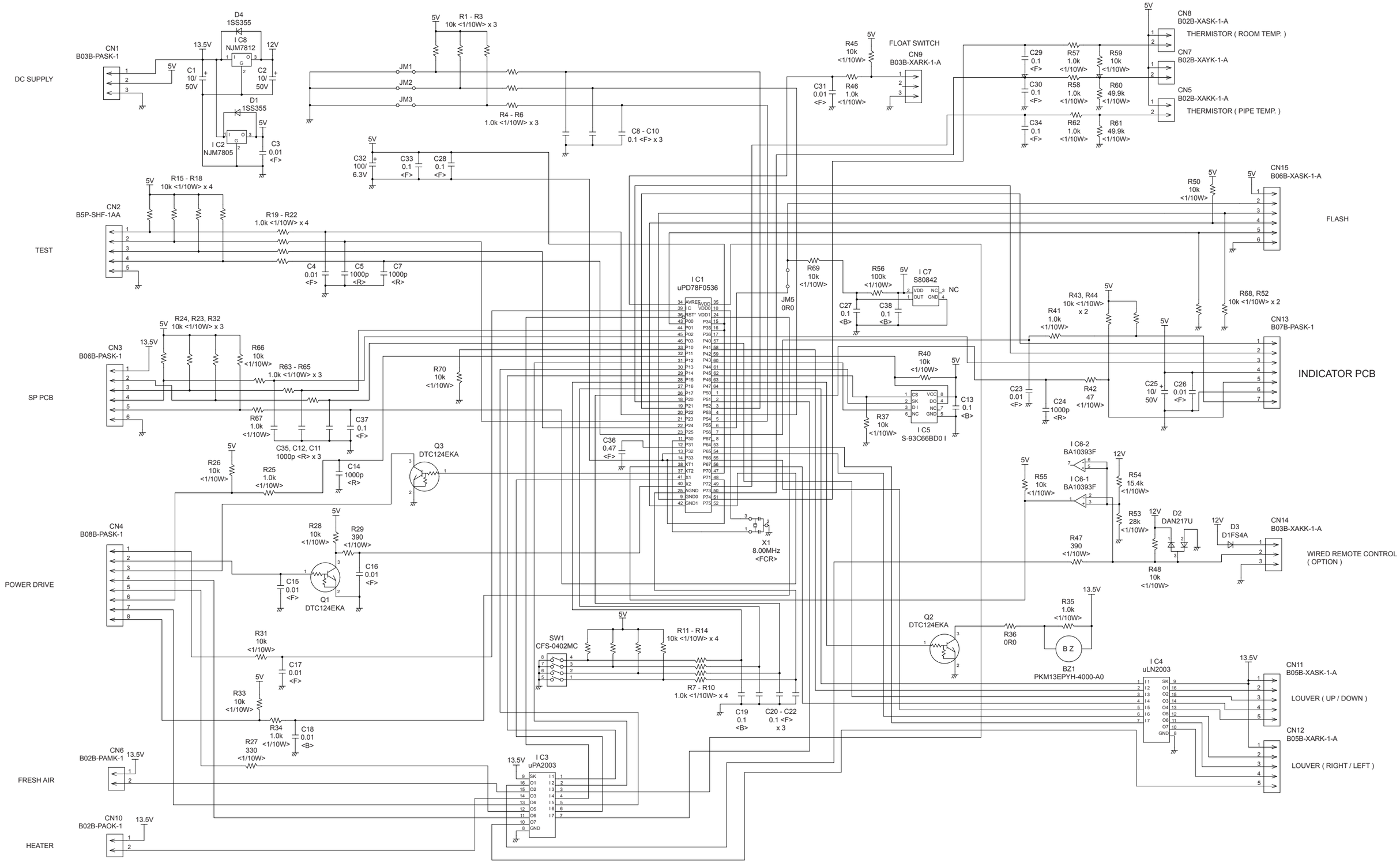

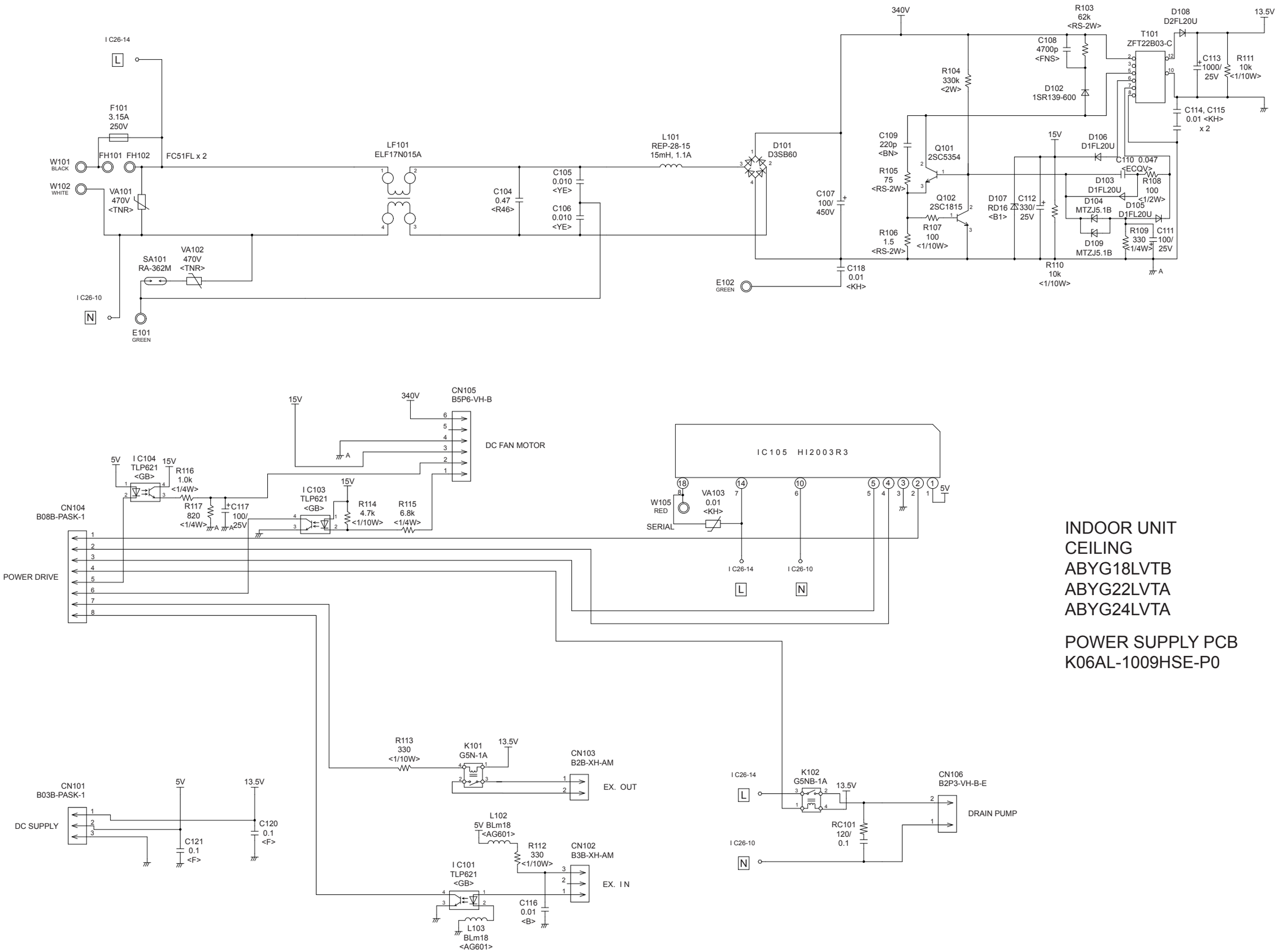

INDOOR UNIT
CEILING
ABYG18LVTB
ABYG22LVTA
ABYG24LVTA

POWER SUPPLY PCB
K06AL-1009HSE-P0

INDOOR UNIT
CEILING
ABYG18LVTB
ABYG22LVTA INDICATOR PCB (OPTION)
ABYG24LVTA K04EI-1001HSE-D0

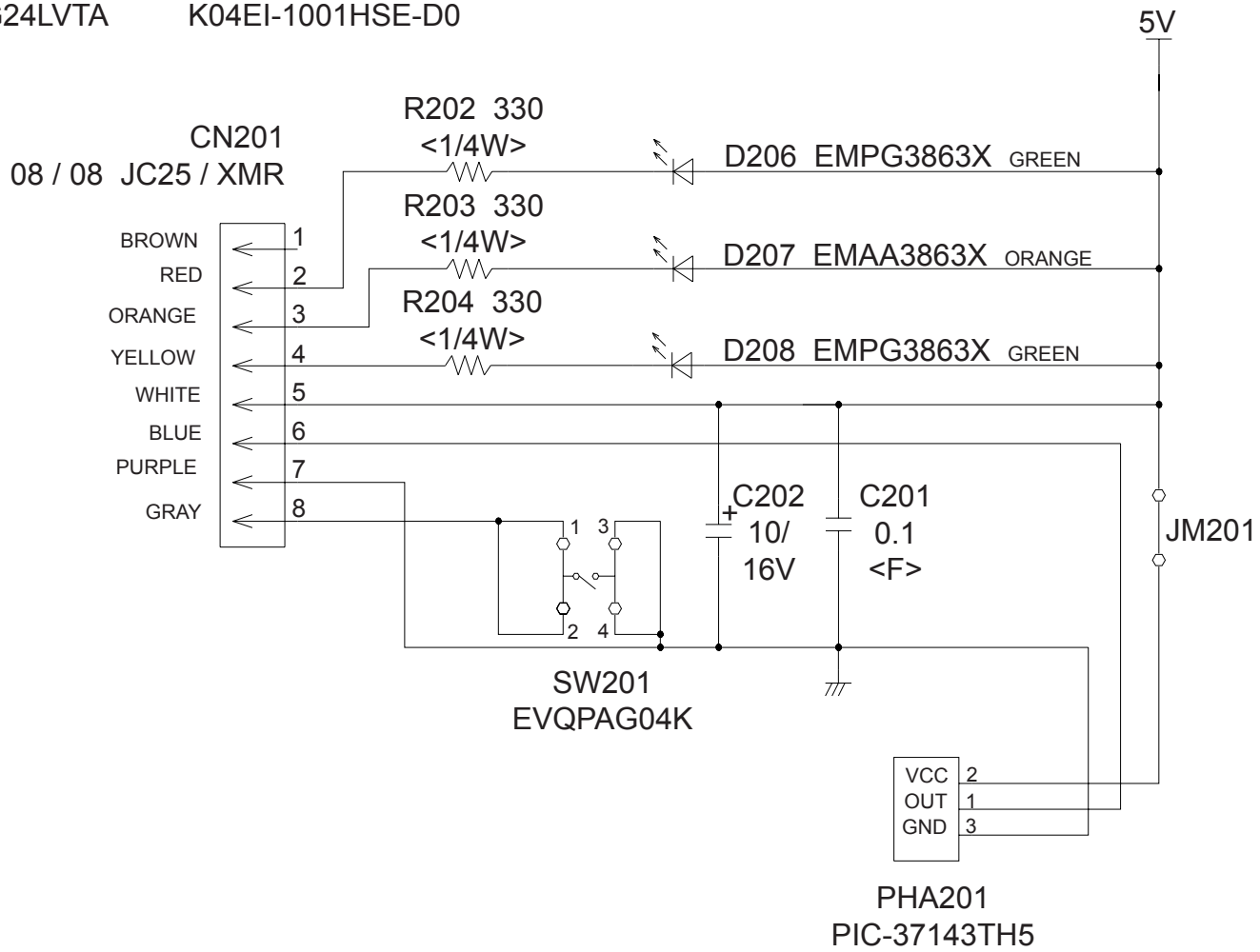

INDOOR UNIT
SLIM DUCT
ARYG18LLTB
CONTROL UNIT : EZ-01226HSE

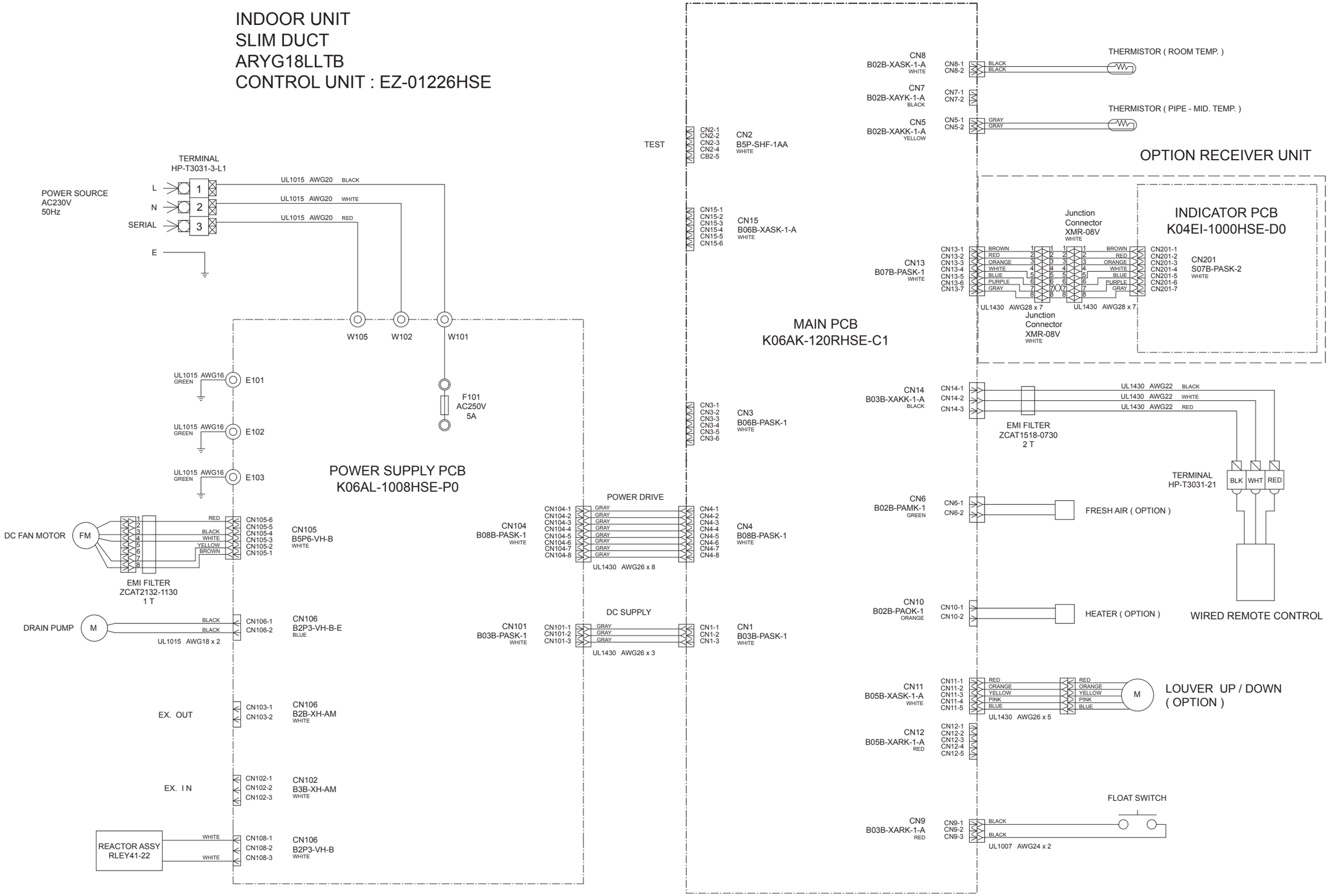

INDOOR UNIT
DUCT
CONTROL UNIT
ARYG22LMLA : EZ-0122THSE
ARYG24LMLA : EZ-01227HSE

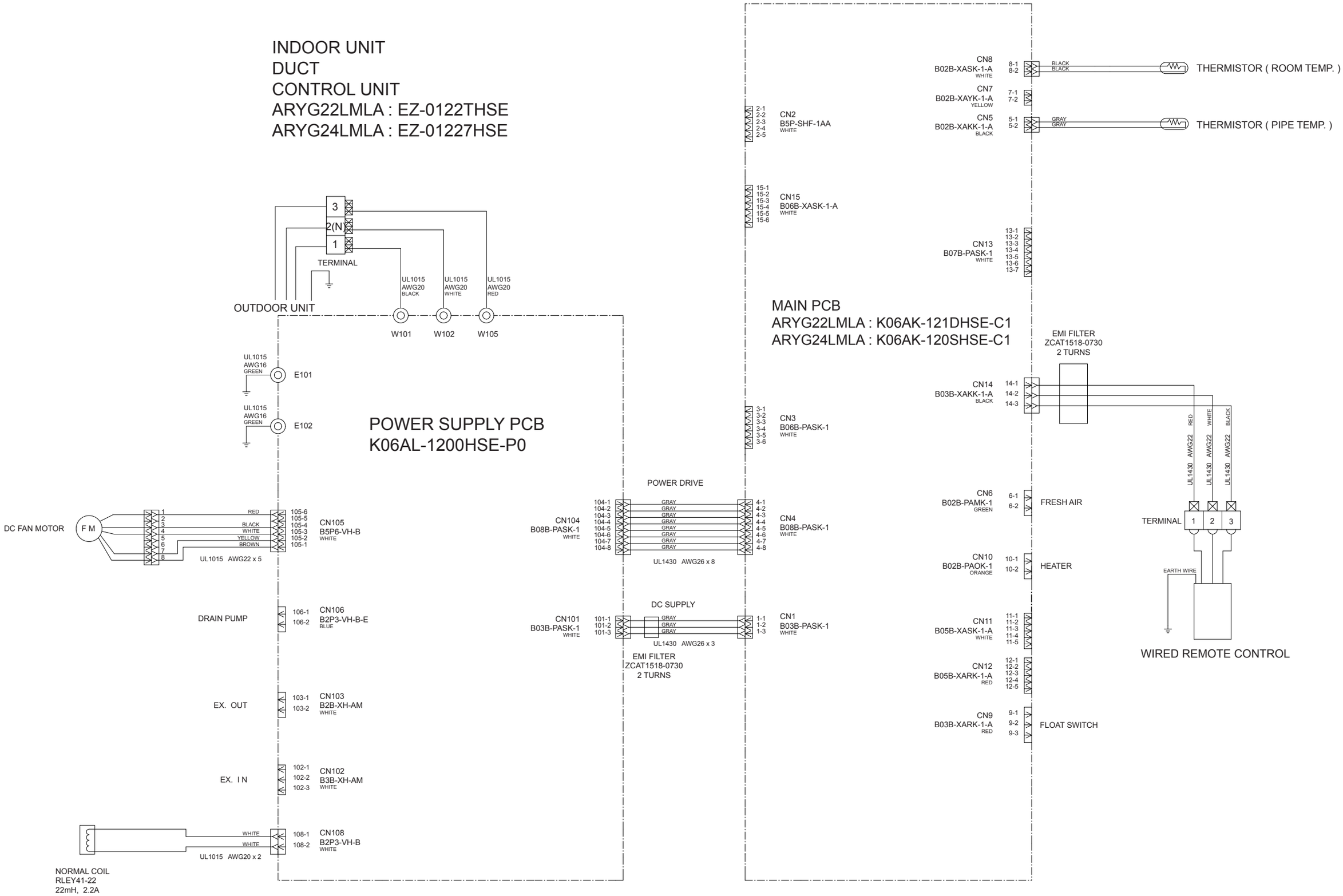

INDOOR UNIT
DUCT
MAIN PCB
ARYG18LLTB : K06AK-120RHSE-C1
ARYG22LMLA : K06AK-121DHSE-C1
ARYG24LMLA : K06AK-120SHSE-C1

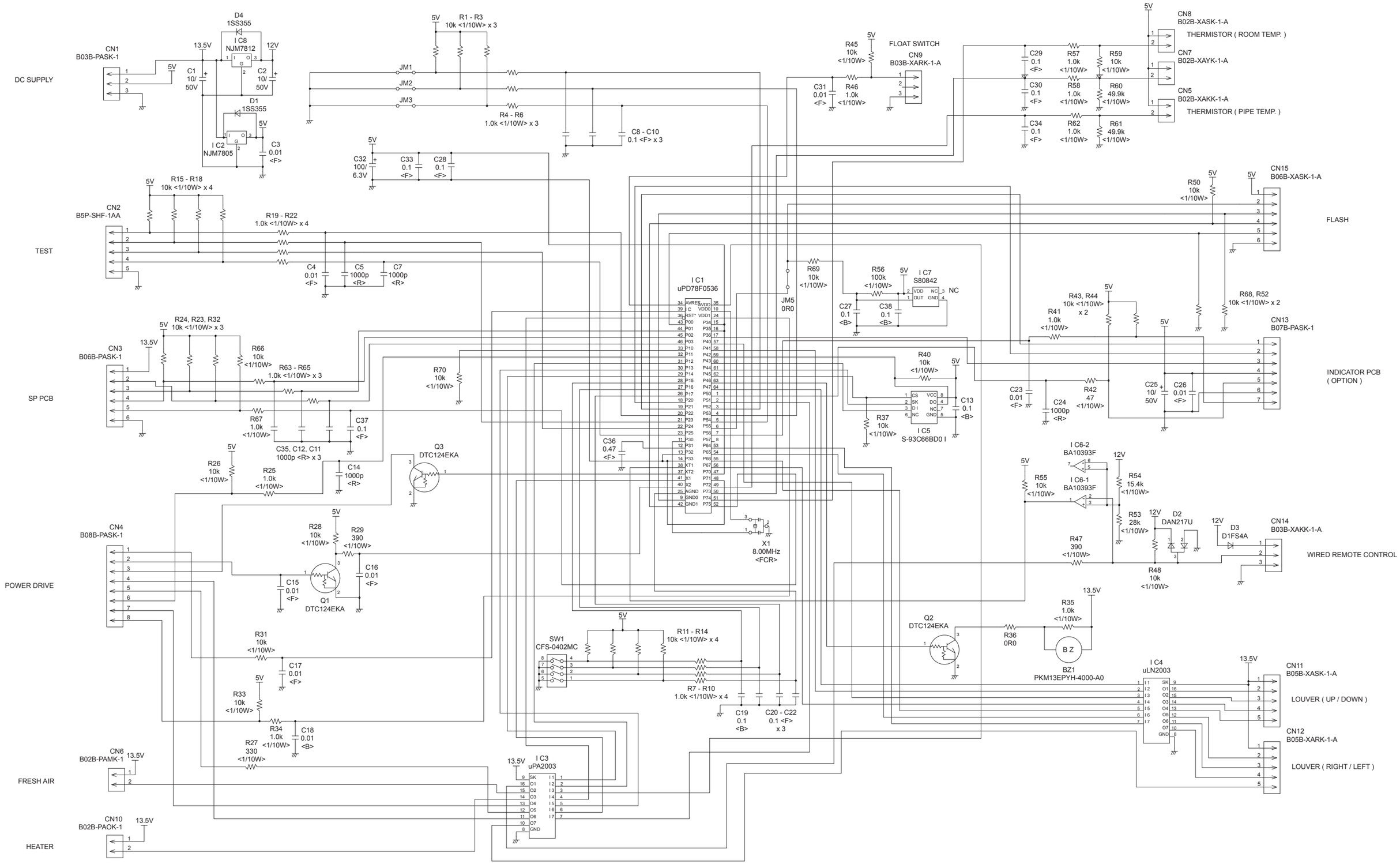

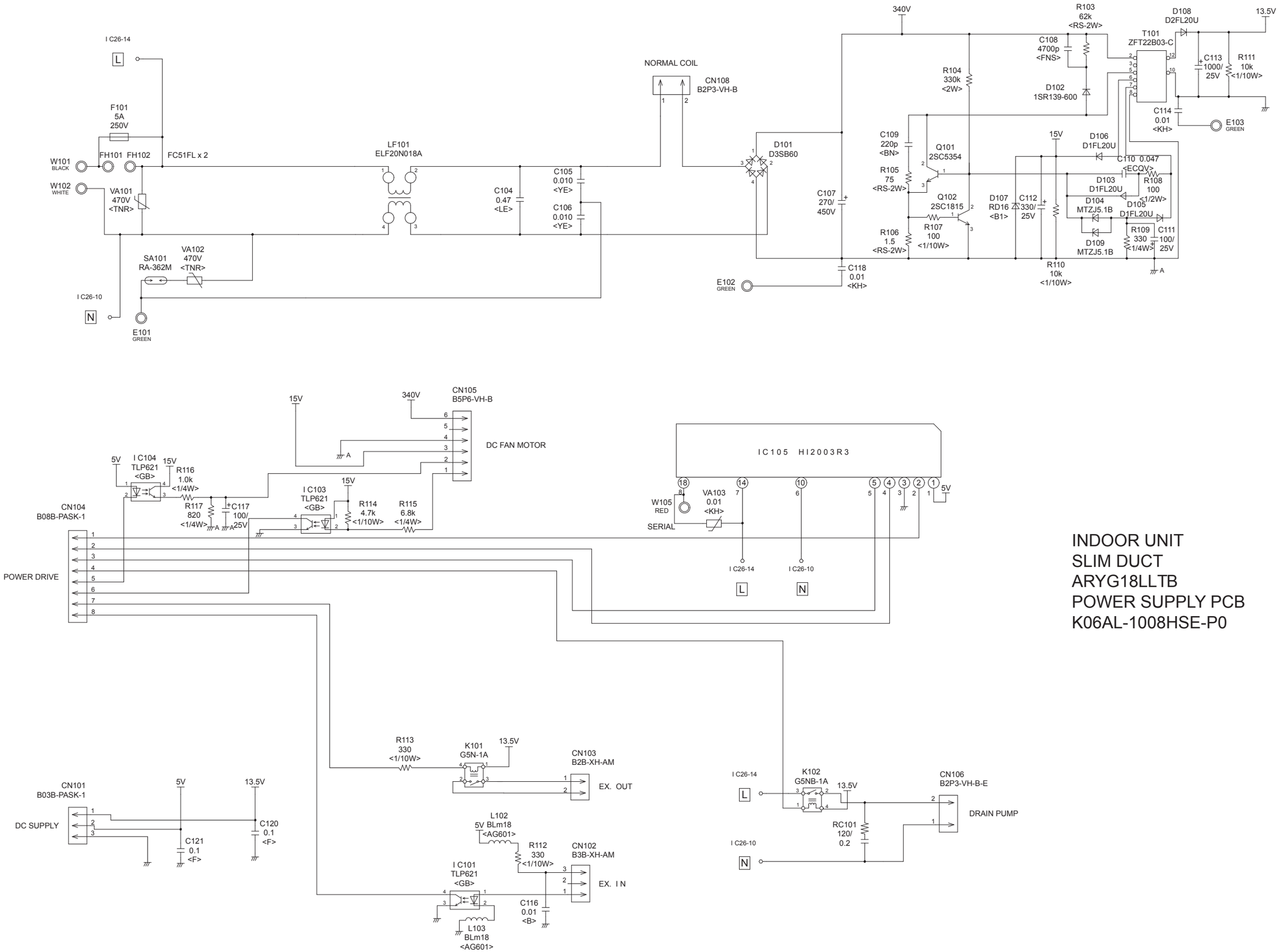

INDOOR UNIT
SLIM DUCT
ARYG18LLTB
POWER SUPPLY PCB
K06AL-1008HSE-P0

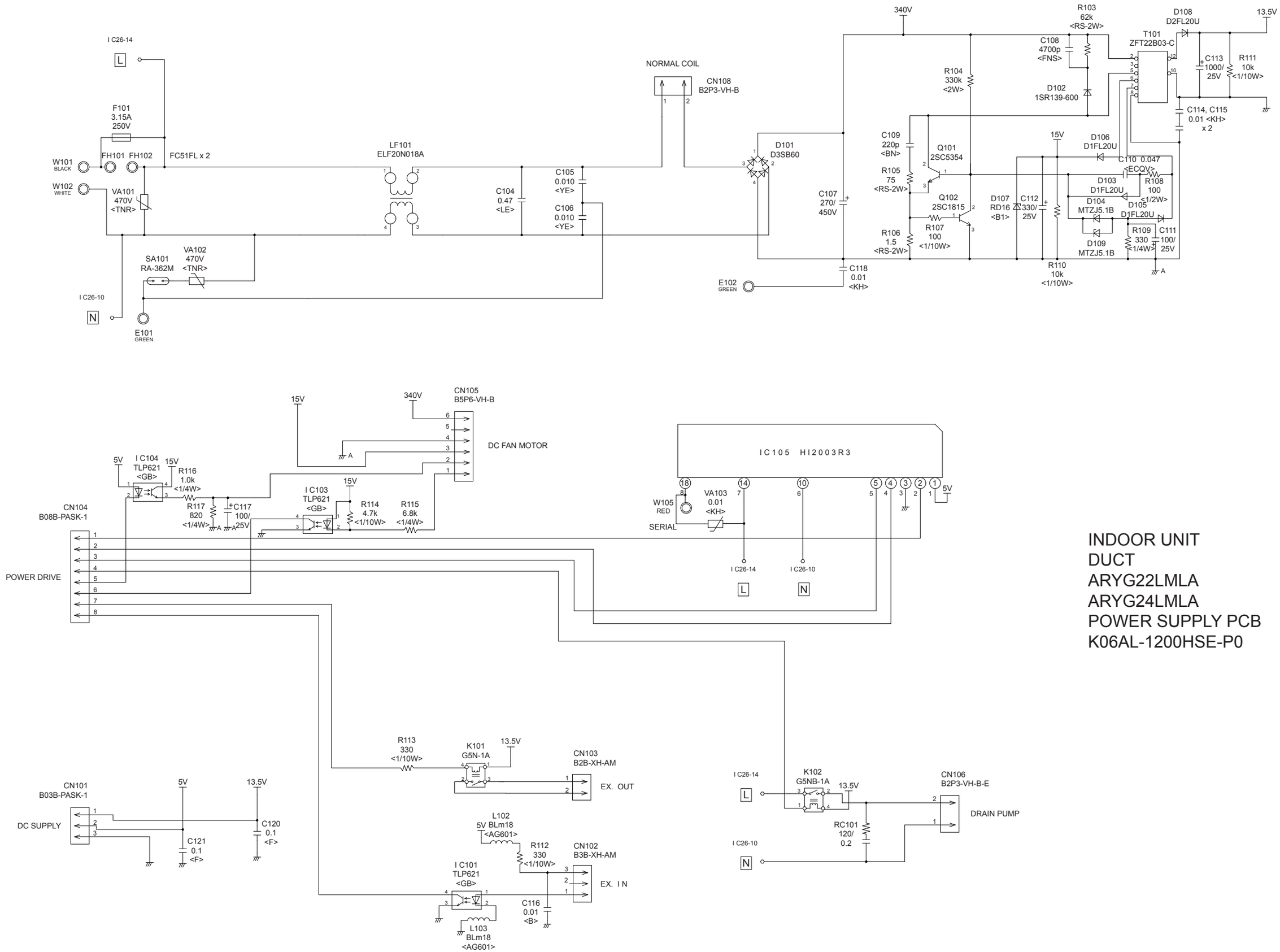

INDOOR UNIT
DUCT
ARYG22LMLA
ARYG24LMLA
POWER SUPPLY PCB
K06AL-1200HSE-P0

INDOOR UNIT
SLIM DUCT
ARYG18LLTB
(OPTION)
INDICATOR PCB
K04EI-1000HSE-D0

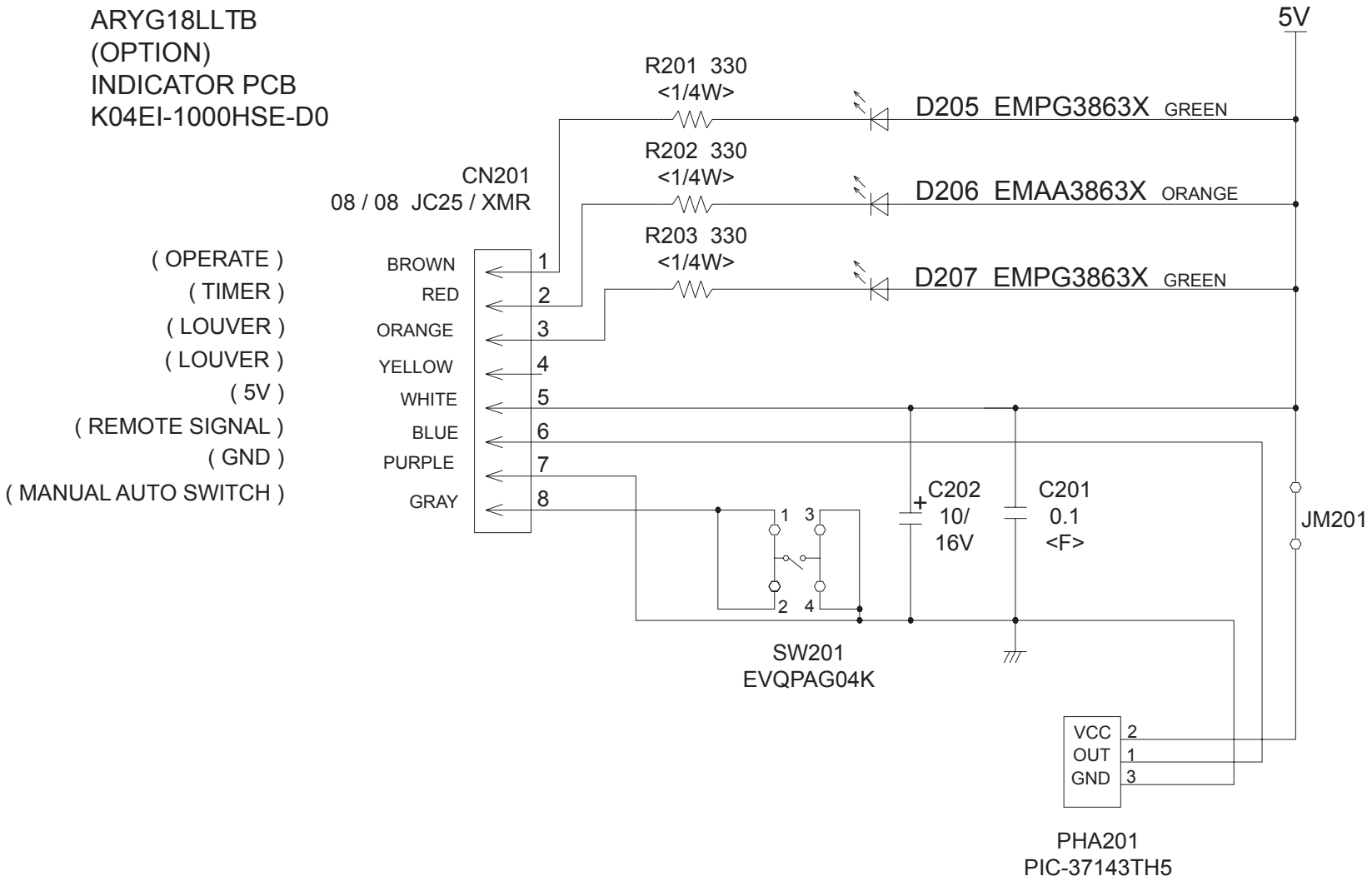

ERROR DETECTION

OUTDOOR UNIT

TEST RUN

⚠ CAUTION
Always turn on the power 6 hours prior to the start of the operation in order to protect the compressor.

1. Check items before performing the test run

Make sure to perform the test run.
Before performing the test run, be sure to check the following points.

(1) Is gas leaking?
Check connection of each pipe (flare connection part, brazing part).

(2) Is a breaker installed to the power cable of the outdoor unit ?

(3) Has each cable been securely connected to the terminal according to the specifications ?

(4) Are the 3-way valves (gas pipes and liquid pipes) of the outdoor units open?

(5) Has the power been supplied to the unit for at least 6 hours ?

(6) Has the necessary local setting been done ?

(7) Check insulation resistance of 1 MΩ or more using a 500V mega tester.

If no problems are found with the above items, perform the test run according to “Test run method”.
If any problems are found, immediately resolve the problem and re-check the items.

2. Test run method

⚠ CAUTION
If the test run is performed for 1 outdoor unit in a group control system installation, the test run will also be performed for the other units. Therefore, make sure that all of the units have been installed before starting a test run. (Group control system installation described in “SPECIAL INSTALLATION METHODS” in the installation manual of the indoor unit.)

Operate [ENTER] (TEST RUN) switch on the display board by the following procedure.

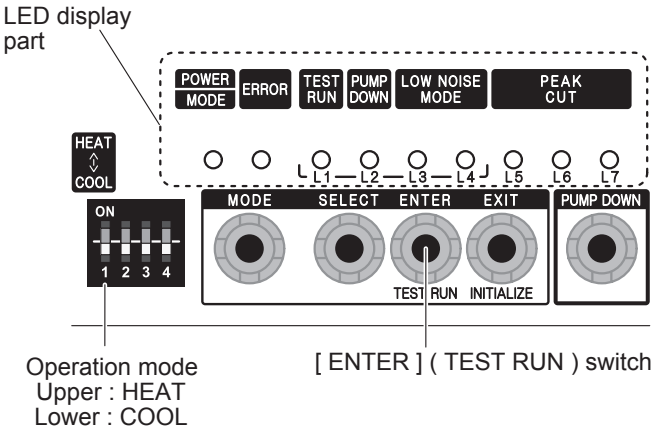

2.1. Operating procedures for the test run

(1) Check the 3-way valves (both at the liquid side and gas side) are opened.

(2) Set the operation mode to “COOL” or “HEAT”.

POWER / MODE	ERROR	TEST RUN (L1)	PUMP DOWN (L2)	LOW NOISE (L3)	LOW NOISE (L4)	PEAK CUT (L5)	PEAK CUT (L6)	PEAK CUT (L7)
●	○	○	○	○	○	○	○	○

In the first test run, be sure to set the operation mode to “COOL”.
The operation mode cannot be switched between “COOL” and “HEAT” during the test run. To switch the operation mode between “COOL” and “HEAT”, stop the test run, switch the operation mode, and then start the test run again.

(3) Press [ENTER] (TEST RUN) switch for more than 3 seconds.

POWER / MODE	ERROR	TEST RUN (L1)	PUMP DOWN (L2)	LOW NOISE (L3)	LOW NOISE (L4)	PEAK CUT (L5)	PEAK CUT (L6)	PEAK CUT (L7)
●	○	●	○	○	○	○	○	○

“TEST RUN” LED will light on.
If the compressor is operating at starting the test run, the compressor will stop and, after a while, the test run will start.
Either of the above "LOW NOISE" or "PEAK CUT" will light on during the test run if local setting function is selected.

(4) Confirm operating status.

(5) Press [ENTER] (TEST RUN) switch again.

POWER / MODE	ERROR	TEST RUN (L1)	PUMP DOWN (L2)	LOW NOISE (L3)	LOW NOISE (L4)	PEAK CUT (L5)	PEAK CUT (L6)	PEAK CUT (L7)
●	○	○	○	○	○	○	○	○

“TEST RUN” LED lights off, and TEST RUN stops.

Test run will finish after about 60 minutes automatically.
At the same time, “TEST RUN” LED will light off.
Test run may be stopped before operating for 60 minutes if an error occurs after a starting test run.

OUTDOOR UNIT
ERROR CODE DISPLAY

Display when an error occurs

POWER MODE	ERROR	TEST RUN (L1)	PUMP DOWN (L2)	LOW NOISE (L3)	LOW NOISE (L4)	PEAK CUT (L5)	PEAK CUT (L6)	PEAK CUT (L7)
●	Blinks (Hi-speed)	○	○	○	○	○	○	○

Check that the ERROR LED blinks,
and then short-press the [ENTER] switch once.
The number of blinks of the LED indicates the type of error.

Display mode ● : ON
○ : OFF
◆ : Blink (0.5s ON / 0.5s OFF)
( ) : Number of flashing

Error code check table

POWER MODE	ERROR	TEST RUN (L1)	PUMP DOWN (L2)	LOW NOISE (L3)	LOW NOISE (L4)	PEAK CUT (L5)	PEAK CUT (L6)	PEAK CUT (L7)	Description
◆(2)	●	◆(1)	◆(1)	○	○	○	●	●	Serial forward transmission error immediately after operation
◆(2)	●	◆(1)	◆(1)	○	○	●	○	○	Serial forward transmission error during operation
◆(2)	●	◆(2)	◆(2)	○	○	○	○	●	Indoor unit capacity error
◆(2)	●	◆(5)	◆(15)	○	○	○	○	●	Indoor unit error
◆(2)	●	◆(6)	◆(1)	○	○	○	○	●	Over voltage
◆(2)	●	◆(6)	◆(1)	○	○	○	●	●	Power supply frequency error
◆(2)	●	◆(6)	◆(2)	○	○	○	○	●	Outdoor unit PCB model information error
◆(2)	●	◆(6)	◆(2)	○	○	●	●	●	PFC communication error
◆(2)	●	◆(6)	◆(3)	○	○	○	○	●	Inverter error
◆(2)	●	◆(6)	◆(4)	○	○	●	●	●	PFC AD detection error
◆(2)	●	◆(6)	◆(4)	○	●	○	○	○	PFC hardware error
◆(2)	●	◆(6)	◆(5)	○	○	○	●	●	IPM error (Trip terminal L error)
◆(2)	●	◆(6)	◆(8)	○	○	○	●	○	Rush current limiting resister temp rise protection
◆(2)	●	◆(7)	◆(1)	○	○	○	○	●	Discharge temp. sensor error
◆(2)	●	◆(7)	◆(2)	○	○	○	○	●	Compressor temp. sensor error
◆(2)	●	◆(7)	◆(3)	○	○	○	●	○	Heat Ex. middle temp. sensor error
◆(2)	●	◆(7)	◆(3)	○	○	○	●	●	Outdoor unit Heat Ex. liquid temp. sensor error
◆(2)	●	◆(7)	◆(4)	○	○	○	○	●	Outdoor temp. sensor error
◆(2)	●	◆(7)	◆(7)	○	○	○	○	●	Heat sink temp. sensor error
◆(2)	●	◆(7)	◆(7)	○	○	○	●	○	PFC heat sink temp. sensor error
◆(2)	●	◆(8)	◆(4)	○	○	○	○	●	Current sensor 1 error (stoppage permanently)
◆(2)	●	◆(8)	◆(6)	○	○	●	○	○	High pressure switch 1 error
◆(2)	●	◆(8)	◆(6)	○	○	●	●	○	Pressure sensor error
◆(2)	●	◆(9)	◆(4)	○	○	○	○	●	Trip detection (stoppage permanently)
◆(2)	●	◆(9)	◆(5)	○	○	○	○	●	Compressor motor control error (stoppage permanently)
◆(2)	●	◆(9)	◆(5)	○	○	●	○	●	Compressor motor loss of synchronization (stoppage permanently)
◆(2)	●	◆(9)	◆(7)	○	○	○	●	●	Outdoor unit fan motor 1 error (Duty error)
◆(2)	●	◆(9)	◆(8)	○	○	○	●	●	Outdoor unit fan motor 2 error (Duty error)
◆(2)	●	◆(9)	◆(9)	○	○	○	○	●	4-way valve error
◆(2)	●	◆(10)	◆(1)	○	○	○	○	●	Discharge temp. 1 error (stoppage permanently)
◆(2)	●	◆(10)	◆(3)	○	○	○	○	●	Compressor 1 temp. error (stoppage permanently)
◆(2)	●	◆(10)	◆(5)	○	○	○	○	●	Low pressure error

OUTDOOR UNIT
PUMP DOWN (Refrigerant collecting operation)

Perform the following procedures to collect the refrigerant when moving the indoor unit or outdoor unit

⚠ WARNING
Never touch electrical components such as the terminal blocks or reactor except the switch on the display board. It may cause a serious accident such as electric shock.

⚠ CAUTION
Perform the pump down operation before disconnecting any refrigerant pipe or electric cable.
Collect refrigerant from the service port or the 3-way valve if pump down cannot be performed.
In case of a group control system installation, do not turn the power off pump down is completed in all outdoor units. (Group control system installation described in “SPECIAL INSTALLATION METHODS” in the installation manual of the indoor unit.)

Operate [PUMP DOWN] switch on the display board in the manner described below.

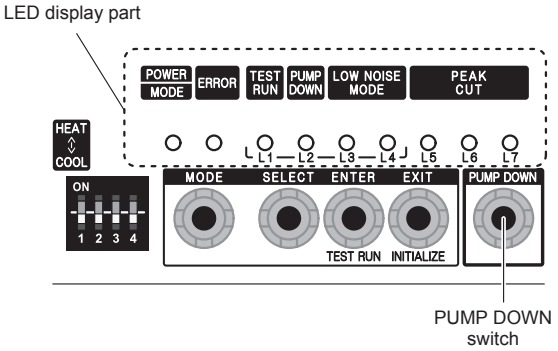

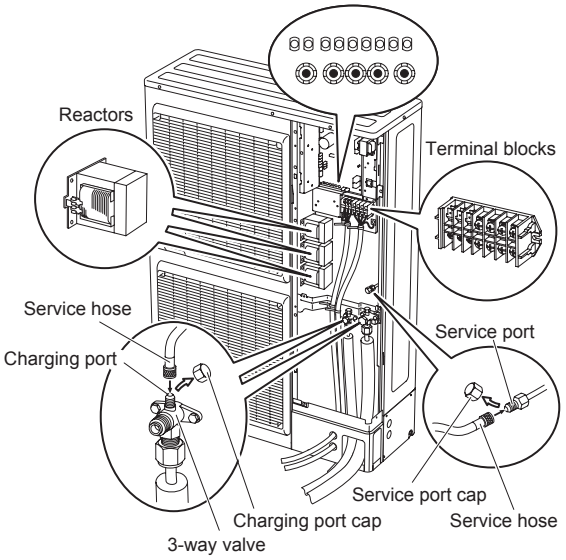

1. Preparation for pump down

Confirm that the power is off,
and then open the service panel.

2. Pump down procedure

(1) Check the 3-way valves (both at the liquid side and gas side) are opened.

(2) Turn the power on.

POWER / MODE	ERROR	TEST RUN (L1)	PUMP DOWN (L2)	LOW NOISE (L3)	LOW NOISE (L4)	PEAK CUT (L5)	PEAK CUT (L6)	PEAK CUT (L7)
●	○	○	○	○	○	○	○	○

(3) Press [PUMP DOWN] switch for 3 seconds or more after 3 minutes after power on.

POWER / MODE	ERROR	TEST RUN (L1)	PUMP DOWN (L2)	LOW NOISE (L3)	LOW NOISE (L4)	PEAK CUT (L5)	PEAK CUT (L6)	PEAK CUT (L7)
●	○	○	●	○	○	●	●	●

LED display lights on as shown in the above figure, and the fans and the compressor start operating.

If the [PUMP DOWN] switch is pressed while the compressor is operating, the compressor will stop, then start again in about 3 minutes.

(4) LED display will change as shown below about 3 minutes after the compressor starts. Fully close the 3-way valve on the liquid pipe side at this stage.

POWER / MODE	ERROR	TEST RUN (L1)	PUMP DOWN (L2)	LOW NOISE (L3)	LOW NOISE (L4)	PEAK CUT (L5)	PEAK CUT (L6)	PEAK CUT (L7)
●	○	○	●	○	○	○	●	●

If the valve on the liquid pipe side is not closed, the pump down cannot be performed.

(5) When LED display changes as shown in the below figure, close the 3-way valve on the gas pipe side tightly.

POWER / MODE	ERROR	TEST RUN (L1)	PUMP DOWN (L2)	LOW NOISE (L3)	LOW NOISE (L4)	PEAK CUT (L5)	PEAK CUT (L6)	PEAK CUT (L7)
●	○	○	●	○	○	○	○	●

If the valve on the gas pipe side is not closed, refrigerant may flow into the piping after the compressor stops

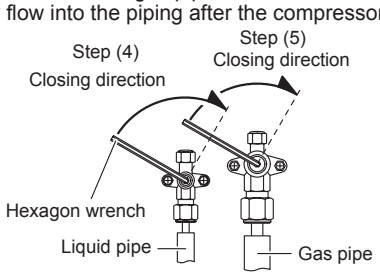

(6) LED display changes after 1 minute as shown in the figure below

POWER / MODE	ERROR	TEST RUN (L1)	PUMP DOWN (L2)	LOW NOISE (L3)	LOW NOISE (L4)	PEAK CUT (L5)	PEAK CUT (L6)	PEAK CUT (L7)
●	○	○	●	○	○	○	○	○

Fans and compressor stop automatically.

If the pump down is successfully completed (the above LED display is shown), the outdoor unit remains stopped until the power is turned off.

(7) Turn the power off.

POWER / MODE	ERROR	TEST RUN (L1)	PUMP DOWN (L2)	LOW NOISE (L3)	LOW NOISE (L4)	PEAK CUT (L5)	PEAK CUT (L6)	PEAK CUT (L7)
○	○	○	○	○	○	○	○	○

PUMP DOWN is completed.

(Note)

To stop pump down, press the [PUMP DOWN] switch again.

To start the pump down again after the compressor is automatically stopped due to an error, turn the power off and open the 3-way valves. Wait 3 minutes, turn the power on and start the pump down again.

When starting the operation after completion of the pump down, turn the power off, and then open the 3-way valves. Wait 3 minutes, turn the power on and perform a test run in the “COOL” operation mode.

WIRED REMOTE CONTROL

This is possible only on a wired remote control.
If an error occurs, the following display will be shown.
(“Er” will appear in the set room temperature display.)

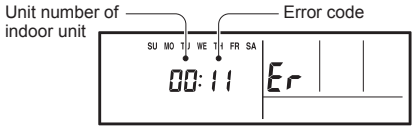

EX. Self-diagnosis

INDOOR UNIT (CASSETTE)

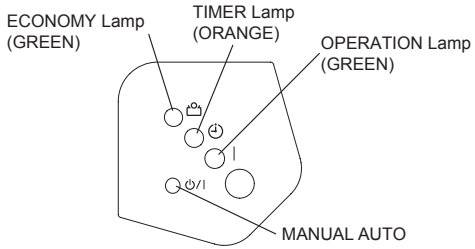

INDOOR UNIT (CEILING)

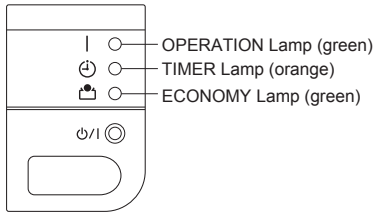

● : 0.5s on / 0.5s off

◇ : 0.1s on / 0.1s off

( ) : Number of flashing

Indoor unit			Wired remote control	Description
OPERATION lamp (green)	TIMER lamp (orange)	ECONOMY lamp (green)		
●(1)	●(1)	◇	11	Serial communication error
●(1)	●(2)	◇	12	Wired remote control communication error
●(1)	●(5)	◇	15	Check run unfinished
●(2)	●(1)	◇	21	Unit number or Refrigerant circuit address setting error [Simultaneous Multi]
●(2)	●(2)	◇	22	Indoor unit capacity error
●(2)	●(3)	◇	23	Combination error
●(2)	●(4)	◇	24	• Connection unit number error (indoor slave unit) [Simultaneous Multi] • Connection unit number error (indoor unit or branch unit) [Flexible Multi]
●(2)	●(7)	◇	27	Master unit, slave unit set-up error [Simultaneous Multi]
●(3)	●(1)	◇	31	Power supply interruption error
●(3)	●(2)	◇	32	Indoor unit PCB model information error
●(3)	●(5)	◇	35	Manual auto switch error
●(4)	●(1)	◇	41	Inlet air temp. sensor error
●(4)	●(2)	◇	42	Indoor unit Heat Ex. Middle temp. sensor error
●(5)	●(1)	◇	51	Indoor unit fan motor error
●(5)	●(3)	◇	53	Drain pump error
●(5)	●(7)	◇	57	Damper error
●(5)	●(15)	◇	5U	Indoor unit error
●(6)	●(2)	◇	62	Outdoor unit main PCB model information error or communication error
●(6)	●(3)	◇	63	Inverter error
●(6)	●(4)	◇	64	Active filter error, PFC circuit error
●(6)	●(5)	◇	65	Trip terminal L error
●(6)	●(10)	◇	6A	Display PCB microcomputers communication error

Indoor unit			Wired remote control	Description
OPERATION lamp (green)	TIMER lamp (orange)	ECONOMY lamp (green)		
●(7)	●(1)	◇	71	Discharge temp. sensor error
●(7)	●(2)	◇	72	Compressor temp. sensor error
●(7)	●(3)	◇	73	Outdoor unit Heat Ex. liquid temp. sensor error
●(7)	●(4)	◇	74	Outdoor temp. sensor error
●(7)	●(5)	◇	75	Suction Gas temp. sensor error
●(7)	●(6)	◇	76	• 2-way valve temp. sensor error • 3-way valve temp. sensor error
●(7)	●(7)	◇	77	Heat sink temp. sensor error
●(8)	●(2)	◇	82	• Sub-cool Heat Ex. gas inlet temp. sensor error • Sub-cool Heat Ex. gas outlet temp.sensor error
●(8)	●(3)	◇	83	Liquid pipe temp. sensor error
●(8)	●(4)	◇	84	Current sensor error
●(8)	●(6)	◇	86	• Discharge pressure sensor error • Suction pressure sensor error • High pressure switch error
●(9)	●(4)	◇	94	Trip detection
●(9)	●(5)	◇	95	Compressor rotor position detection error (permanent stop)
●(9)	●(7)	◇	97	Outdoor unit fan motor 1 error
●(9)	●(8)	◇	98	Outdoor unit fan motor 2 error
●(9)	●(9)	◇	99	4-way valve error
●(9)	●(10)	◇	9A	Coil (expansion valve) error
●(10)	●(1)	◇	A1	Discharge temp. error
●(10)	●(3)	◇	A3	Compressor temp. error
●(10)	●(4)	◇	A4	High pressure error
●(10)	●(5)	◇	A5	Low pressure error
●(13)	●(2)	◇	J2	Branch boxes error [Flexible Multi]

PARTS

OUTDOOR UNIT

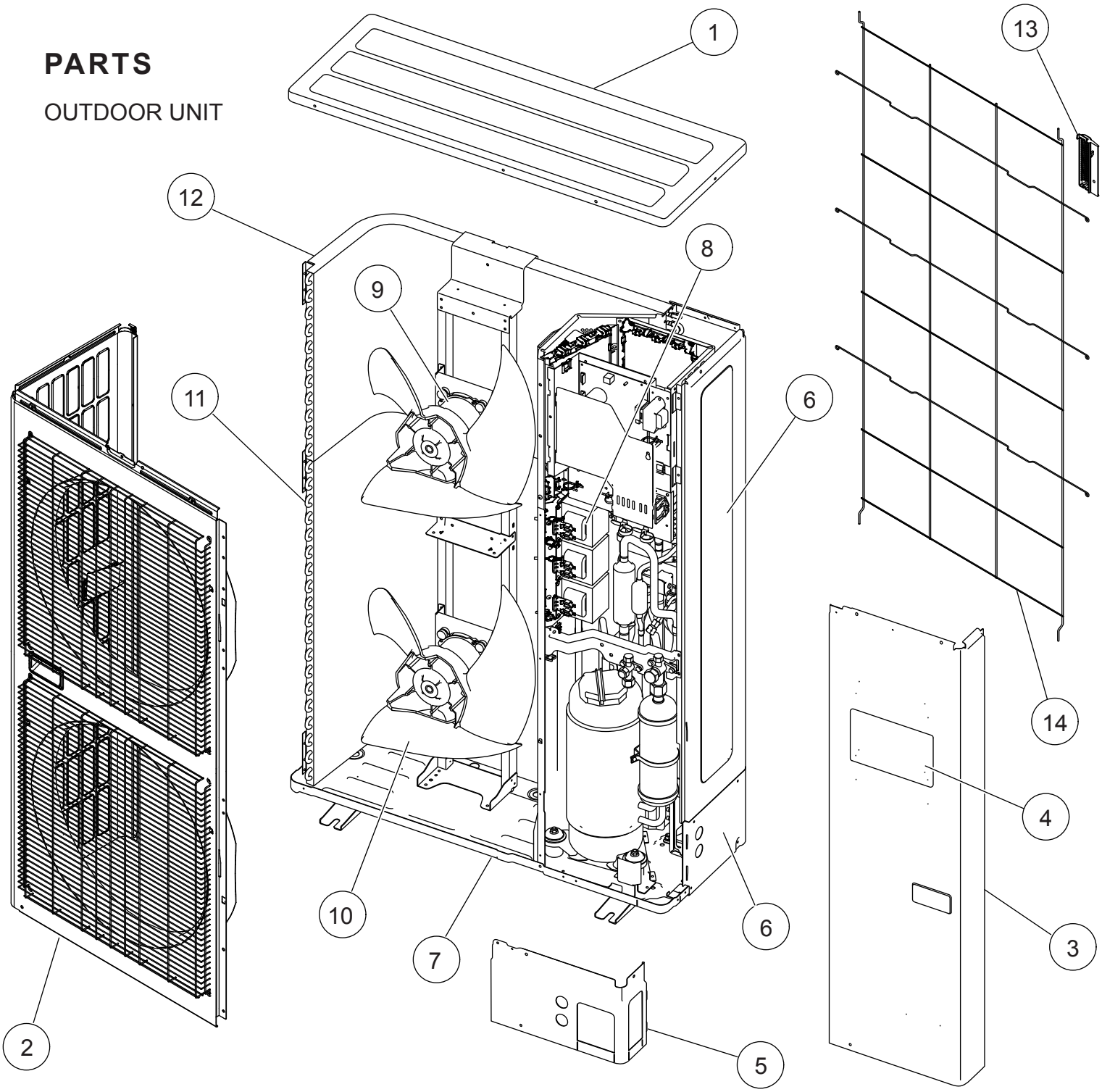

Ref.	Description	Parts number	
1	Top Panel Sub Assy	9374417032	
2	Front Panel Sub Assy	9374414130	
3	Sevice Panel Sub Assy	9374415076	
4	Emblem Rear	9351355005	
5	Pipe Cover Front	9378861015	
6	Right Panel Sub Assy	9374416219	
7	Base Assy	9374166220	

Ref.	Description	Parts number	
8	Reactor Assy	9900641016	
9	Motor, DC Brushless	9602843046	
10	Propeller Fan Assy	9366378020	
11	Condenser A Sub Assy	9374420261	
12	Condenser B Sub Assy	9374422081	
13	Thermo Holder	9375211011	
14	Protective Net	9375381042	

OUTDOOR UNIT

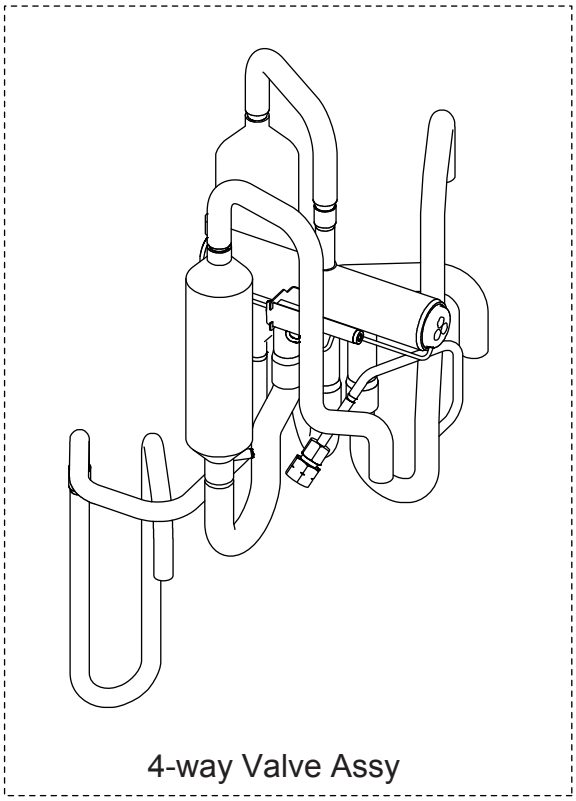

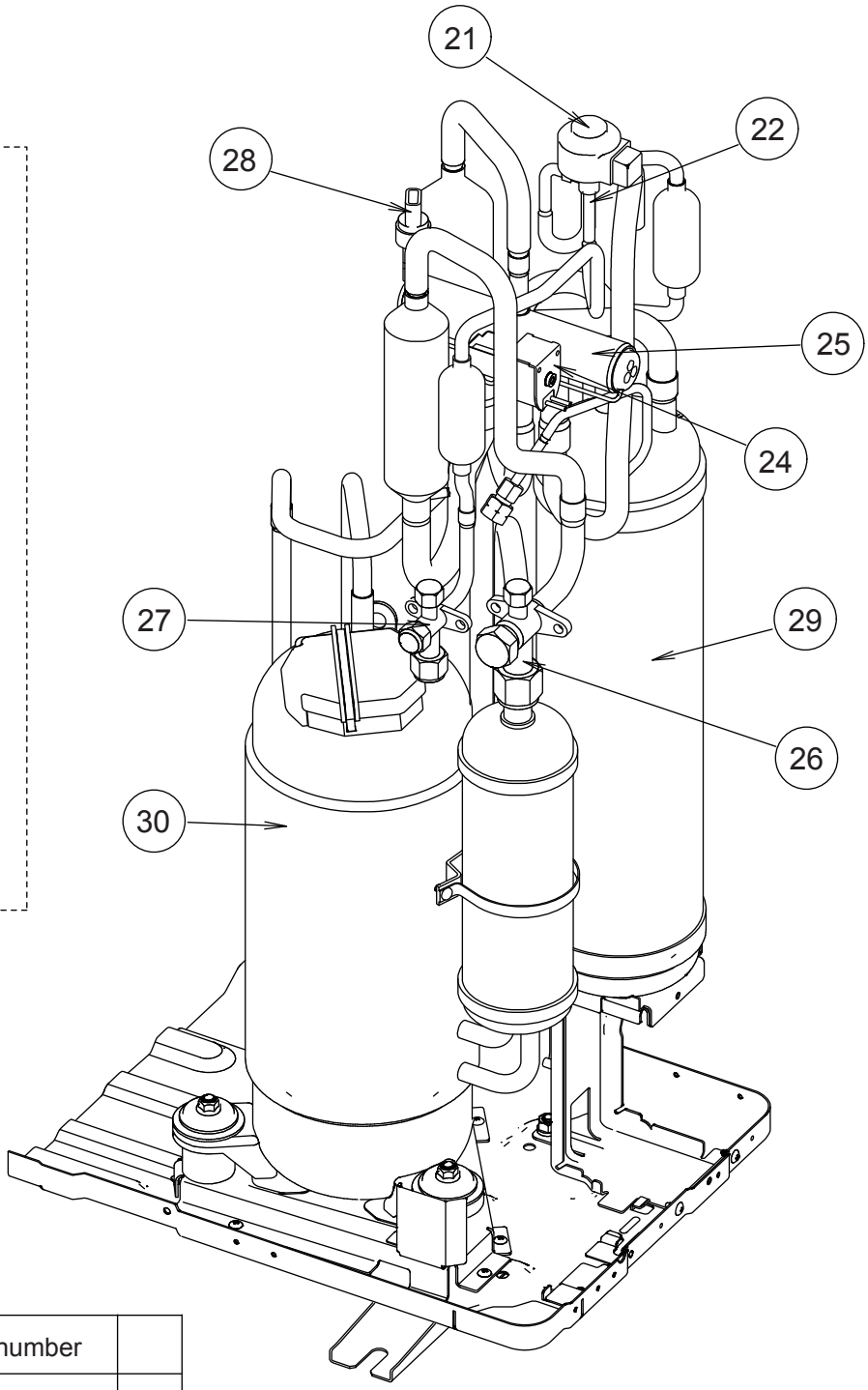

Ref.	Description	Parts number	
21	Expansion Valve Coil	9900190057	
22	Expansion Valve Assy	9370947182	
23	Strainer Assy	9372524039	
24	Solenoid	9970113024	
25	4-way Valve Assy	9374425273	
26	3-way Valve Assy	9379079006	
27	3-way Valve Assy	9379077002	
28	Sensor	9900505011	
29	Accumulator Assy	9375250096	
30	Compressor Sub Assy	9374423286	

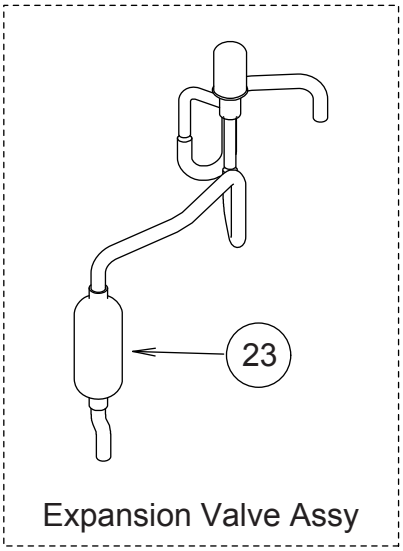

OUTDOOR UNIT

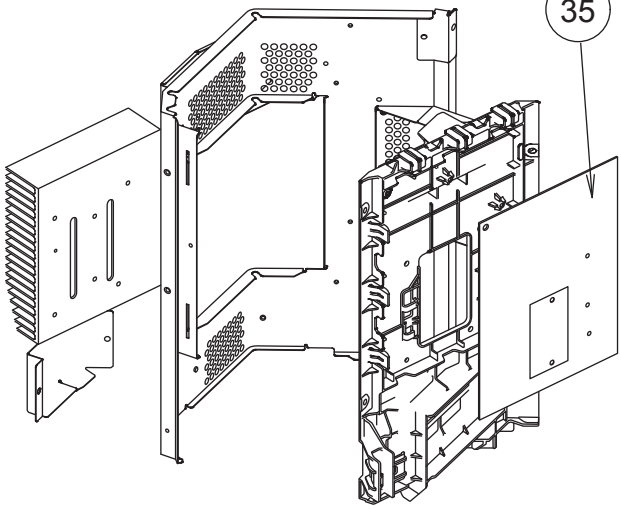

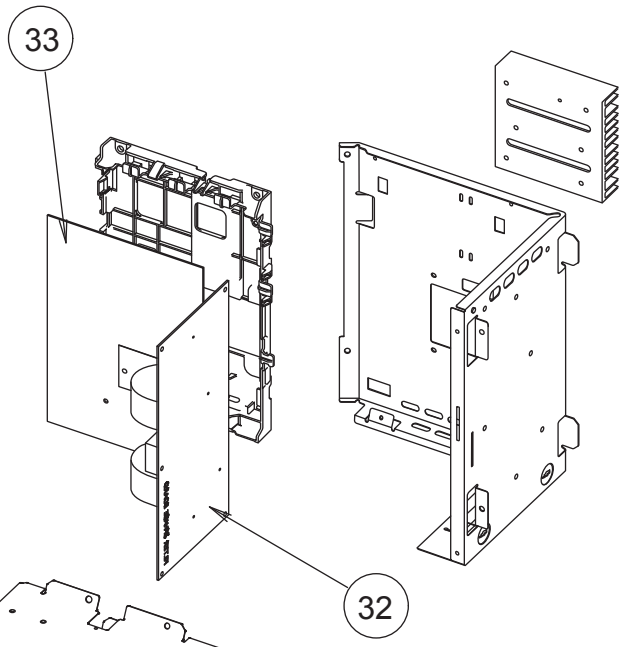

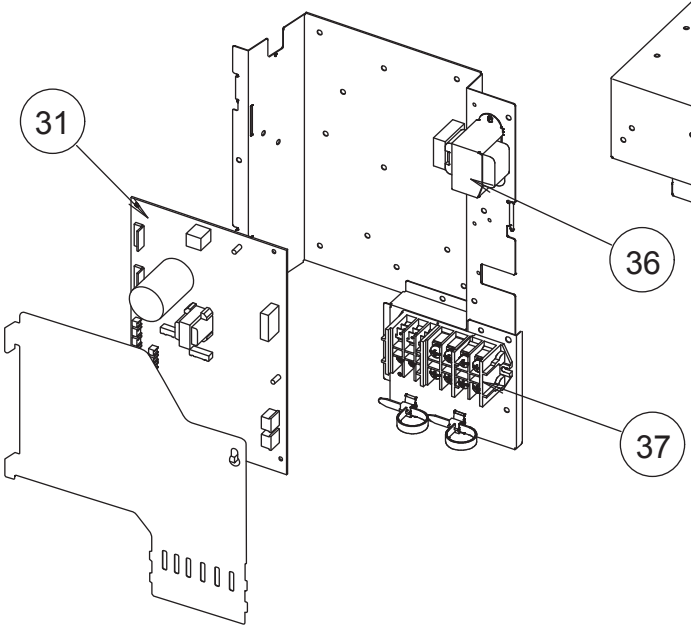

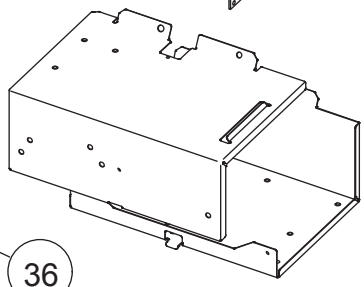

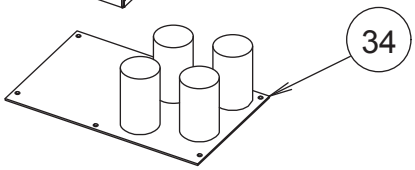

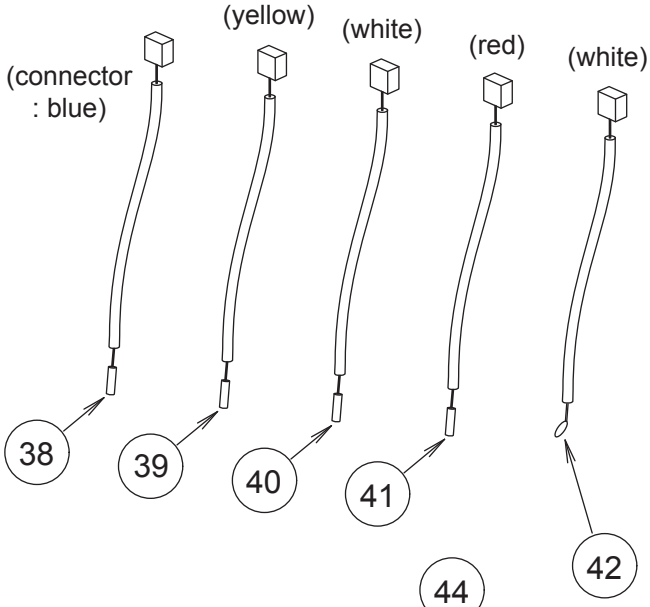

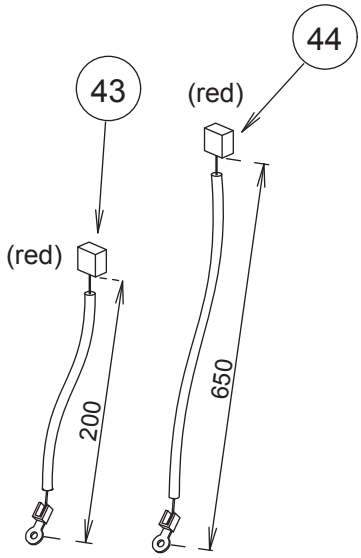

Ref.	Description	Parts number	
31	Main PCB (36)	9707627091	
31	Main PCB (45)	9707627077	
31	Main PCB (54)	9707627084	
32	Filter PCB	9707609011	
33	Active Filter PCB with grease	9709680438	
34	Capacitor PCB	9707608014	
35	Transistor PCB with grease	9709680445	
36	Reactor Assy	9900481018	
37	Terminal	9900428082	
38	Compressor Thermistor	9900516000	
39	Discharge Thermistor	9900515003	
40	Thermistor (Heat Exchanger Mid)	9900513009	
41	Thermistor (Heat Exchanger Out)	9900514006	
42	Outdoor Thermistor	9900517007	
43	Heatsink Thermistor (Inverter)	9900518011	
44	Heatsink Thermistor (PFC)	9900518028	

BRANCH PIPE
UTP-SX254A

(Liquid pipe)

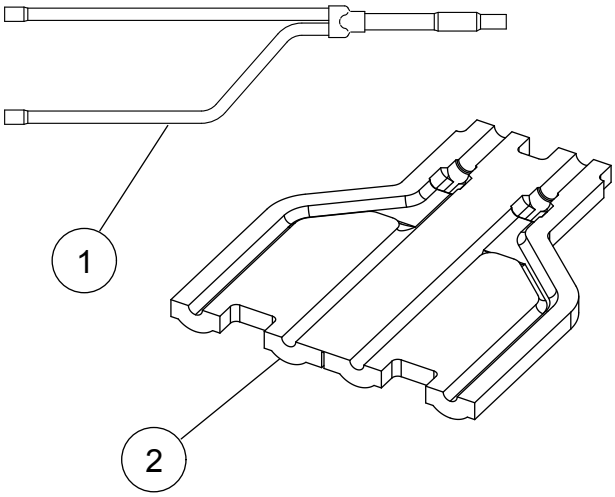

(Gas pipe)

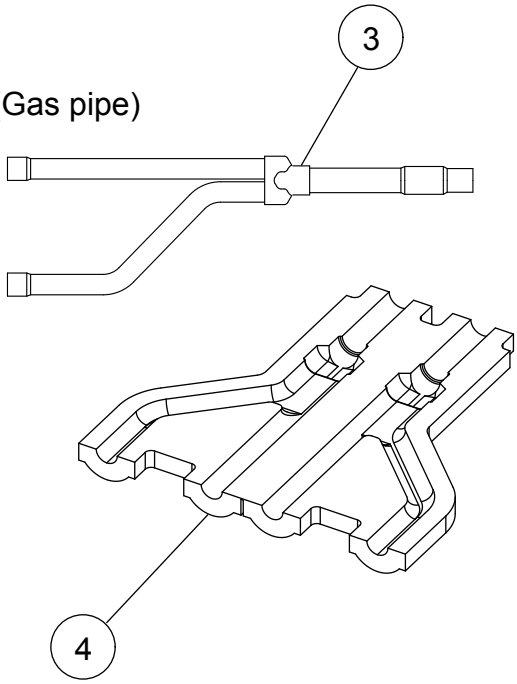

BRANCH PIPE
UTP-SX354A

(Liquid pipe)

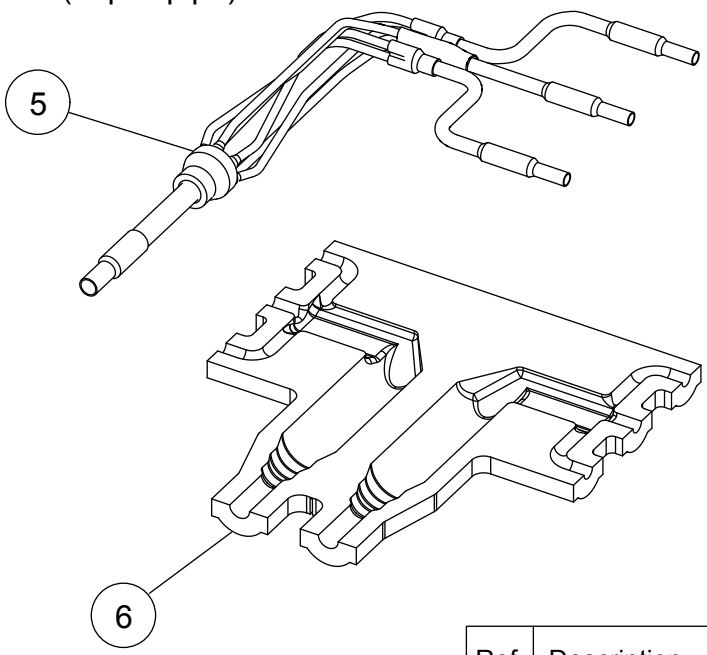

(Gas pipe)

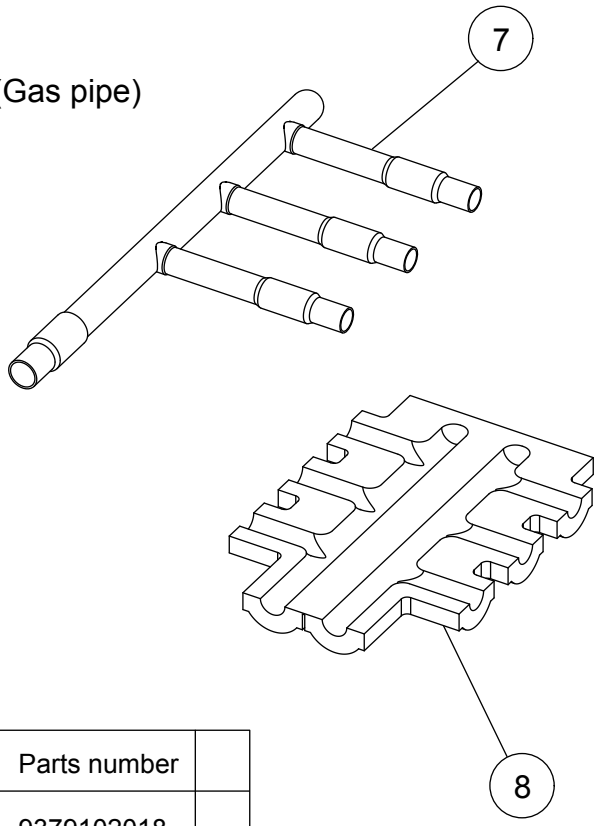

Ref.	Description	Parts number	
1	Branch Pipe A Assy	9379102018	
2	Insulation	9379100014	
3	Branch Pipe B Assy	9379105019	
4	Insulation	9379101011	
5	Branch Pipe A Assy	9379116015	
6	Insulation	9379111010	
7	Branch Header B Assy	9379108010	
8	Insulation	9379112017	

PARTS

DECORATION PANEL
UTG-UFYD-W

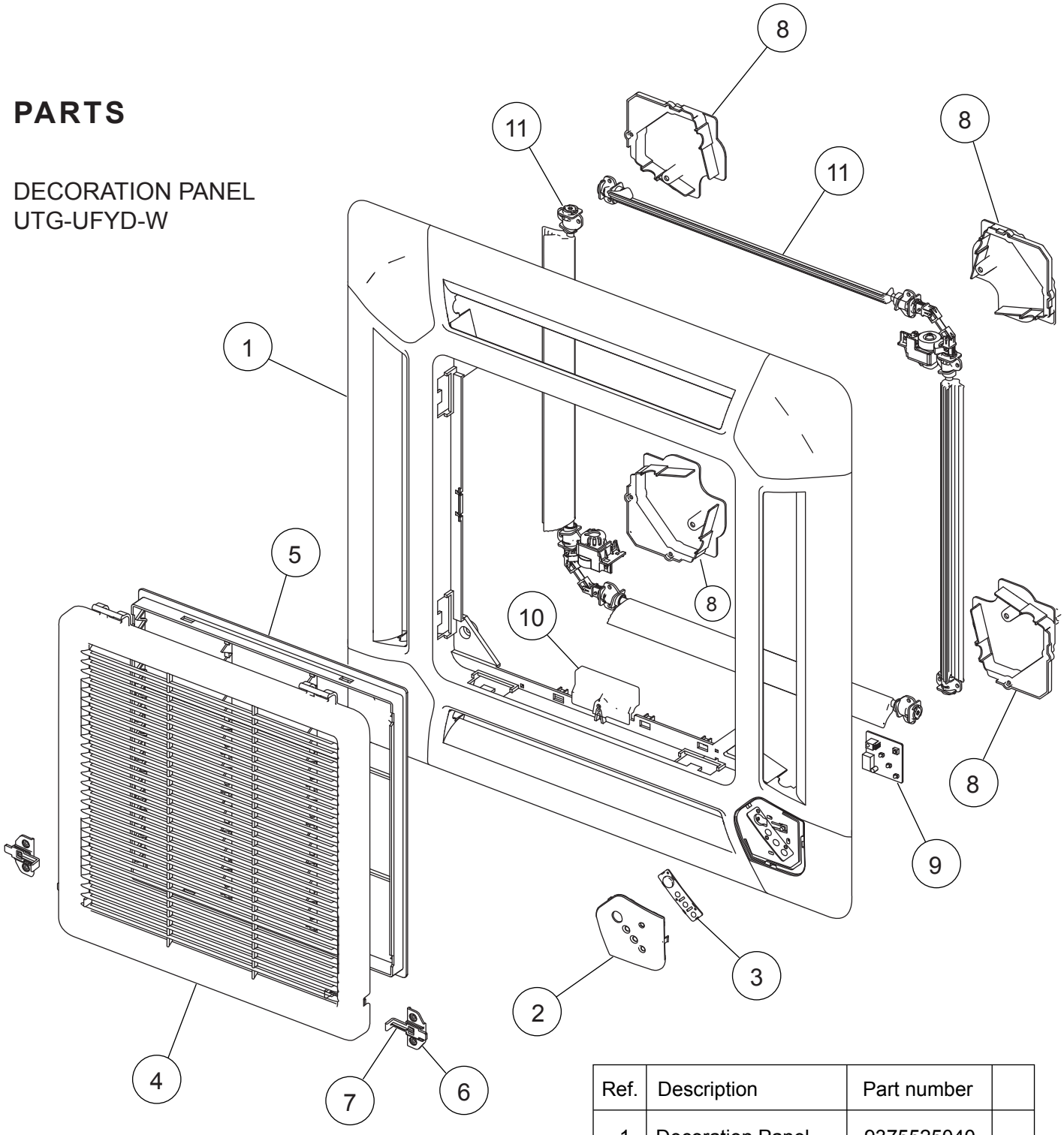

Ref.	Description	Part number	
1	Decoration Panel	9375525040	
2	Display Panel	9375529123	
3	Receiver Window	9375547011	
4	Intake Grille	9375531027	
5	Long Life Filter	9375533014	
6	Hook Bracket	9375546014	
7	Grille Hook	9375532024	
8	Panel Cover	9375530013	
9	Indicator PCB Assy	9707371031	
10	Connector Cover	9375549015	
11	Flap Total Assy	9377760029	

DECORATION PANEL
UTG-UFYD-W

Flap total assy
Motor holder assy

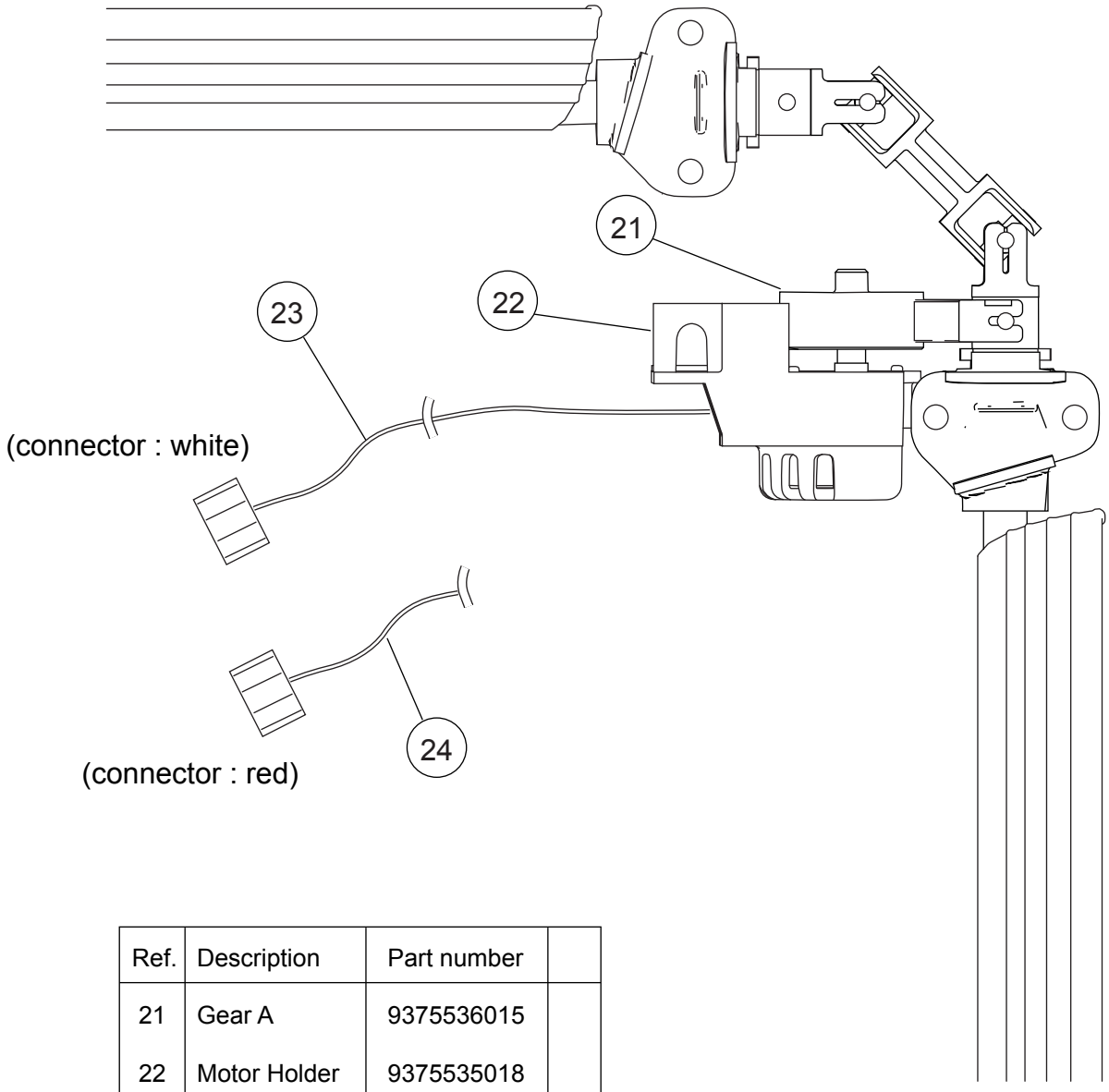

Ref.	Description	Part number	
21	Gear A	9375536015	
22	Motor Holder	9375535018	
23	Step Motor	9900139070	
24	Step Motor	9900139087	

INDOOR UNIT
CASSETTE
AUYG18LVLB
AUYG22LVLA
AUYG24LVLA

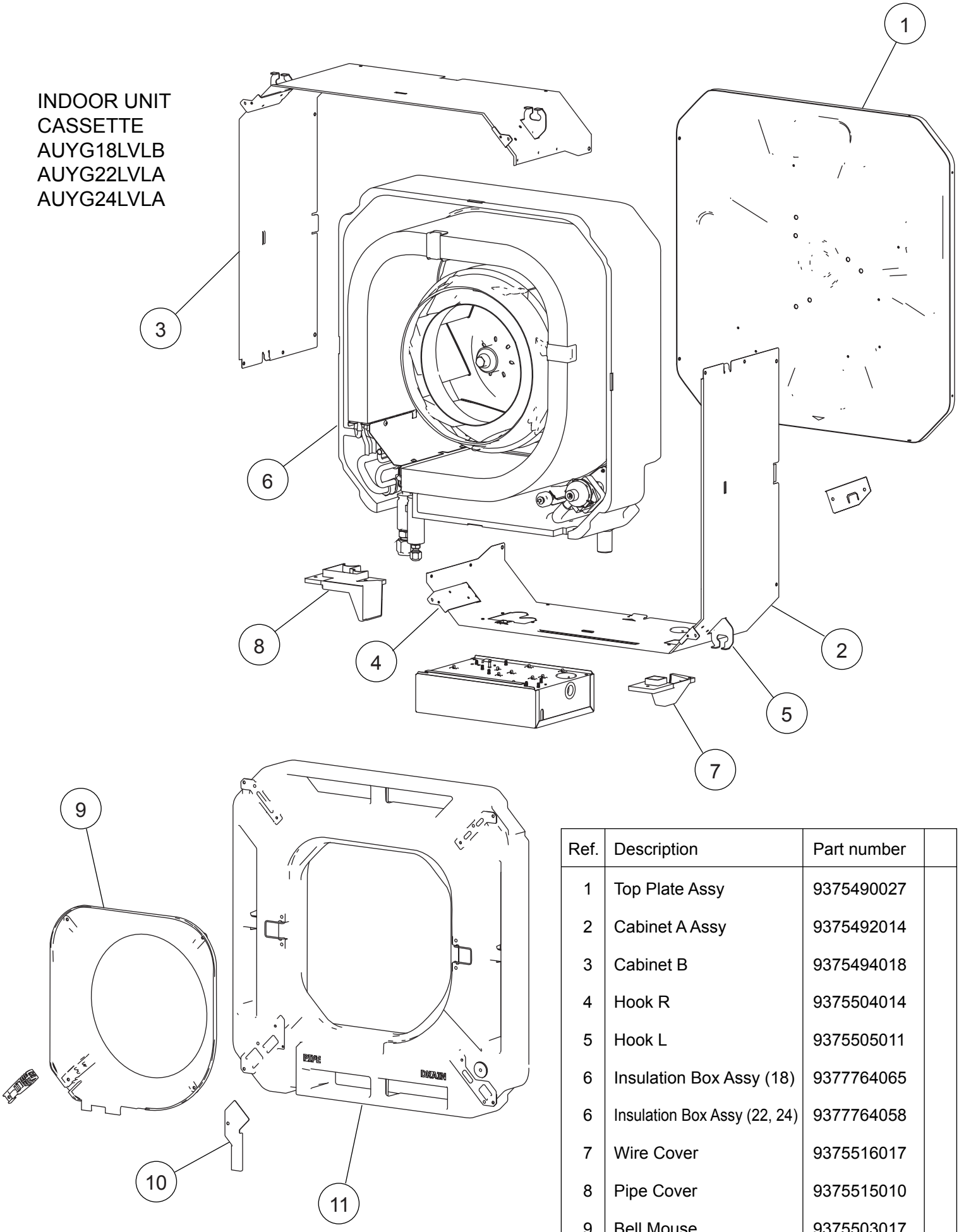

Ref.	Description	Part number	
1	Top Plate Assy	9375490027	
2	Cabinet A Assy	9375492014	
3	Cabinet B	9375494018	
4	Hook R	9375504014	
5	Hook L	9375505011	
6	Insulation Box Assy (18)	9377764065	
6	Insulation Box Assy (22, 24)	9377764058	
7	Wire Cover	9375516017	
8	Pipe Cover	9375515010	
9	Bell Mouse	9375503017	
10	Wire Holder	9375478018	
11	Drain Pan Sub Assy (18)	9377765024	
11	Drain Pan Sub Assy (22, 24)	9377765017	

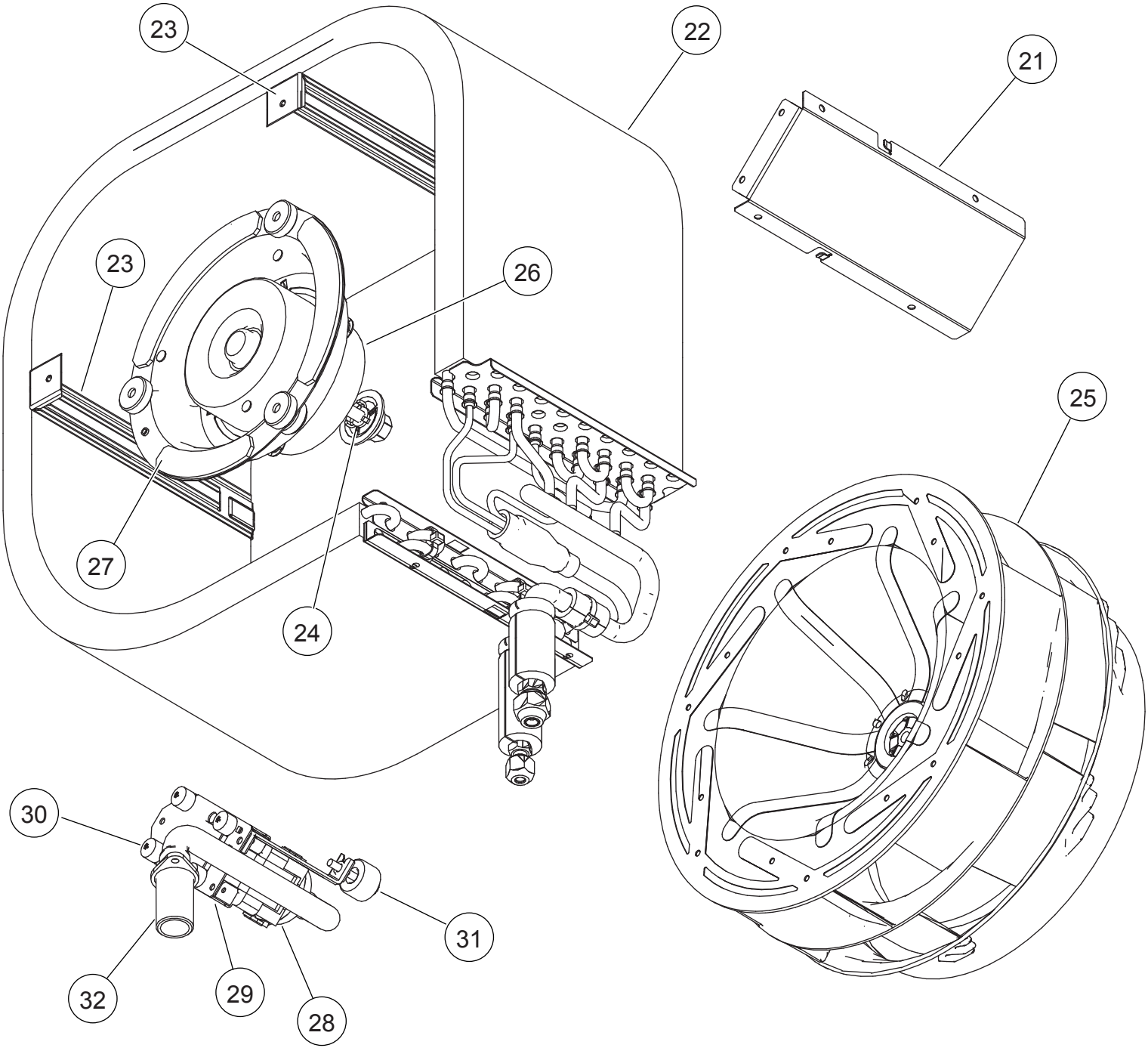

INDOOR UNIT
CASSETTE
AUYG18LVLB

Ref.	Description	Part number	
21	Separate Wall	9375506018	
22	Evaporator Total Assy	9375720070	
23	Evaporator Holder	9375508012	
24	Turbo Fan Washer	9375487010	
25	2 Stage Turbo Fan Assy	9375480011	
26	Fan Motor	9602436019	

Ref.	Description	Part number	
27	Fan Motor Holder	9375552015	
28	Pump Assy	9900472030	
29	Drain Pump Holder B	9375518011	
30	Rubber (Pump)	9378426016	
31	Float Switch	9900361037	
32	Drain Port Sub Assy	9375718015	

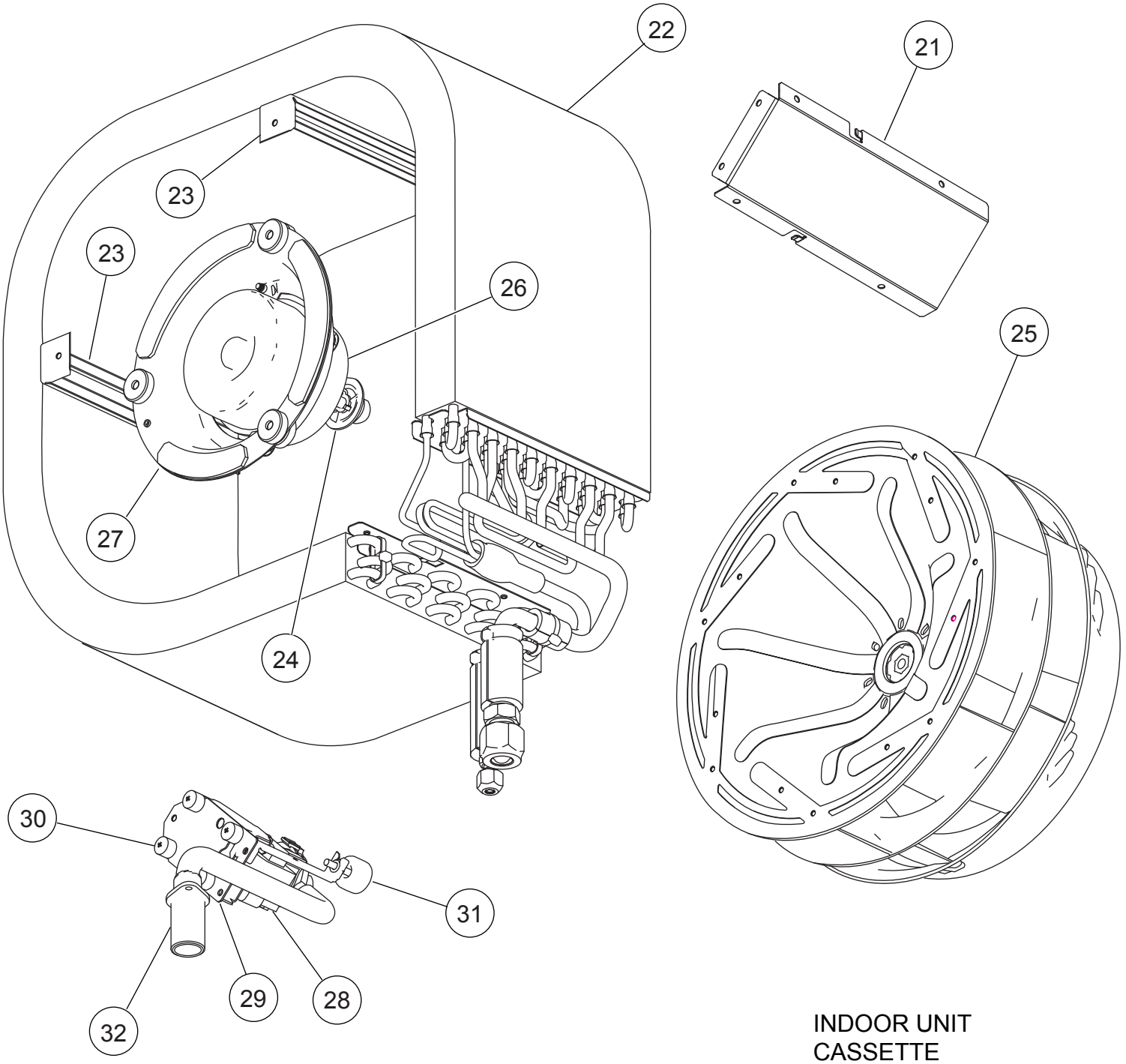

INDOOR UNIT
CASSETTE
AUYG22LVLA
AUYG24LVLA

Ref.	Description	Part number	
21	Separate Wall	9375506018	
22	Evaporator Total Assy	9375720018	
23	Evaporator Holder	9375507015	
24	Turbo Fan Washer	9375487010	
25	2 Stage Turbo Fan Assy	9375480011	
26	Fan Motor	9602436019	

Ref.	Description	Part number	
27	Fan Motor Holder	9375552015	
28	Pump Assy	9900472030	
29	Drain Pump Holder B	9375518011	
30	Rubber (Pump)	9378426016	
31	Float Switch	9900361037	
32	Drain Port Sub Assy	9375718015	

INDOOR UNIT
CASSETTE
AUYG18LVLB
AUYG22LVLA
AUYG24LVLA

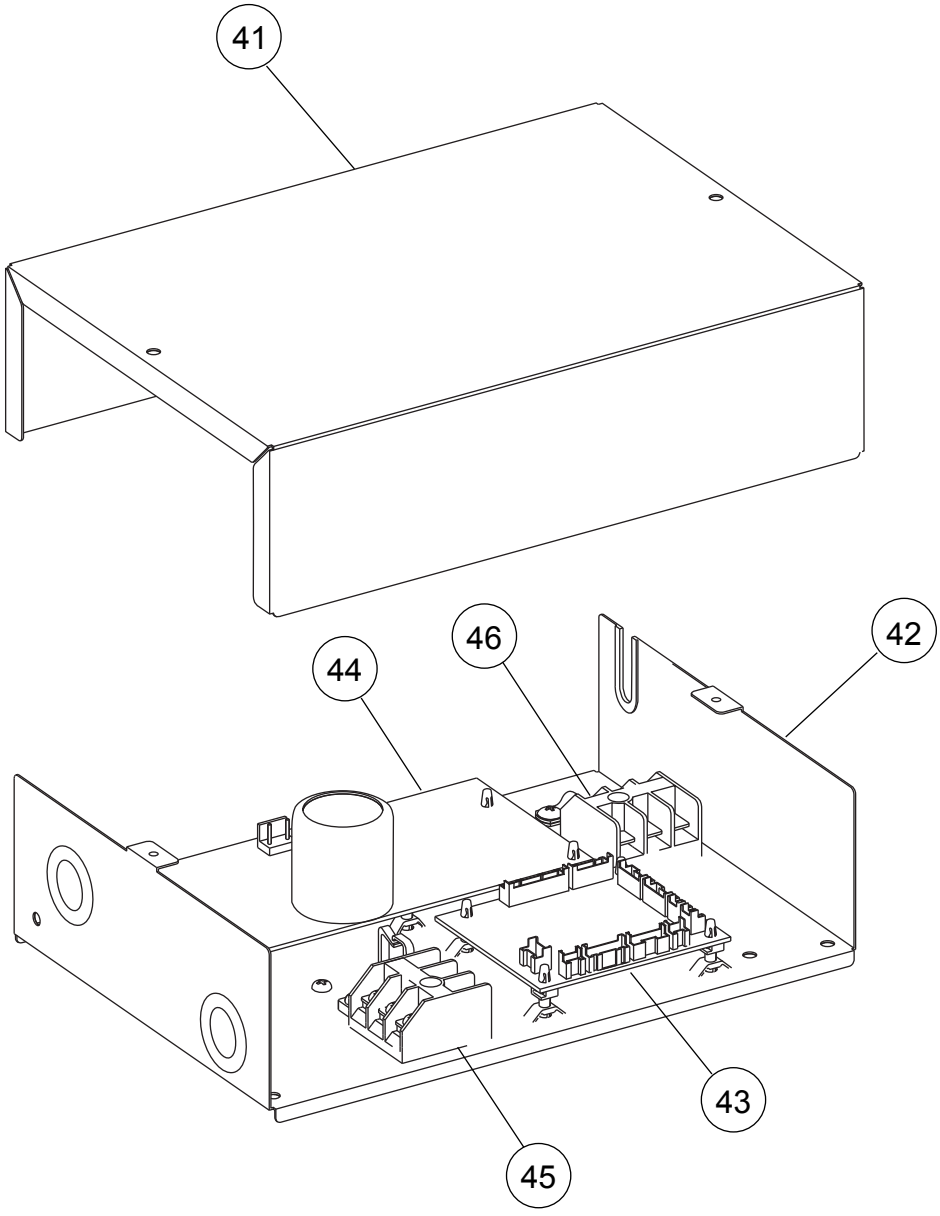

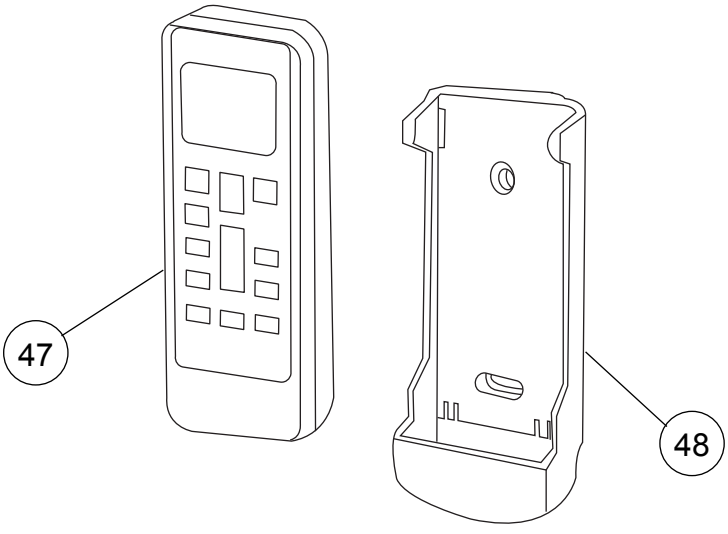

Ref.	Description	Part number	
41	Control Box Cover	9375512019	
42	Control Box A	9375511012	
43	Main PCB (18)	9709245446	
43	Main PCB (22)	9709245514	
43	Main PCB (24)	9709245453	
44	Power Supply PCB	9707398380	
45	Terminal	9306489045	
46	Terminal	9703345012	
47	Remote Control	9379219006	
48	Remote Control Holder	9305642045	
--	Pipe Thermistor	9703297014	
--	Room Thermistor	9900502003	

INDOOR UNIT
CEILING
ABYG18LVTB
ABYG22LVTA
ABYG24LVTA

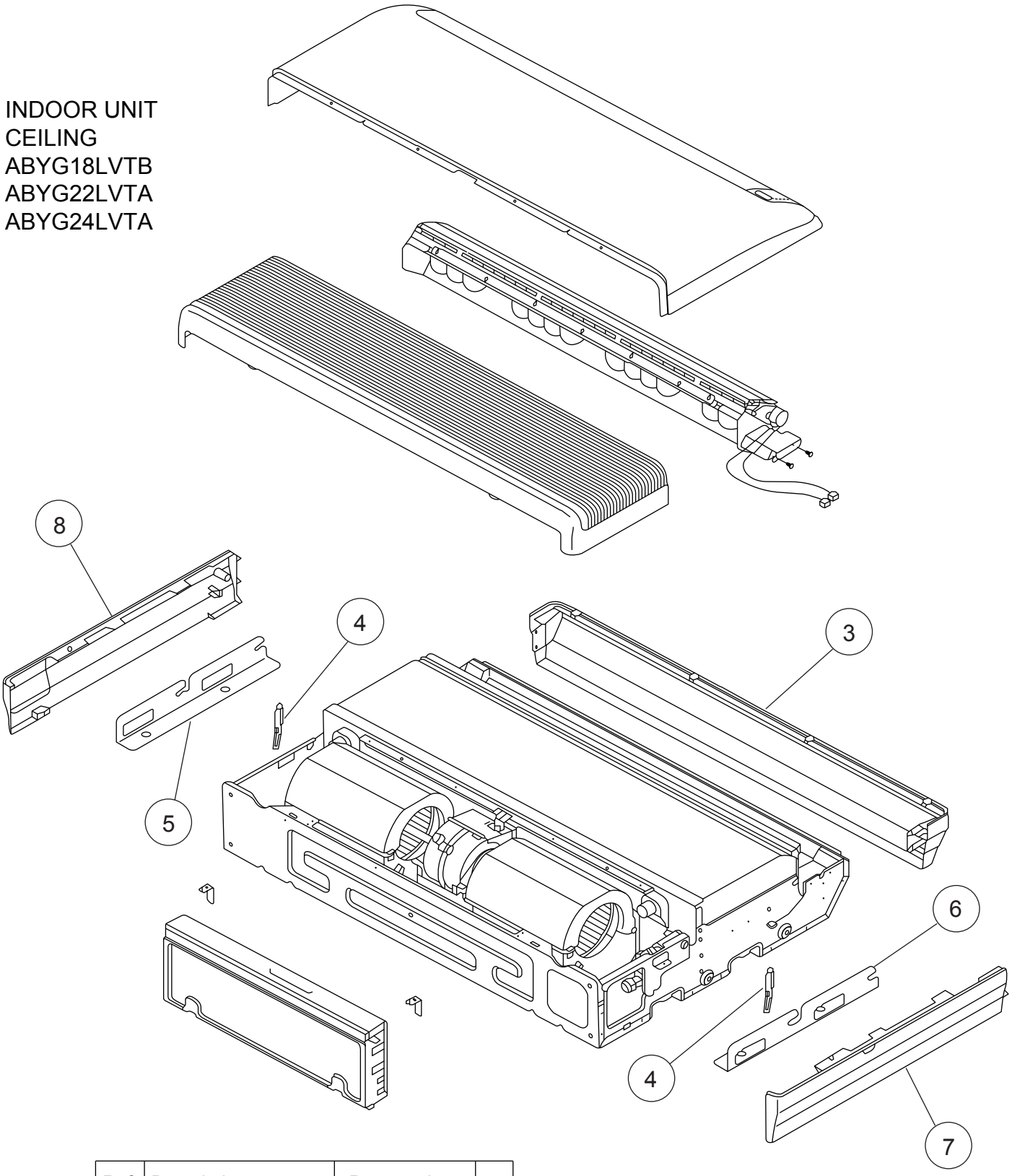

Ref.	Description	Part number	
1	Remote Control	9379219037	
2	Remote Control Holder	9305642045	
3	Top Cover	9358534021	
4	Arm	9358565001	
5	Hanger Bracket L	9358596005	
6	Hanger Bracket R	9358595008	
7	Cosmetic Panel R	9358535028	
8	Cosmetic Panel L	9358536025	

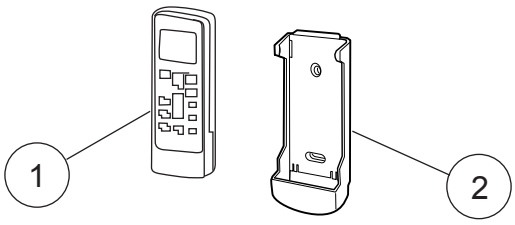

INDOOR UNIT
CEILING
ABYG18LVTB
ABYG22LVTA
ABYG24LVTA

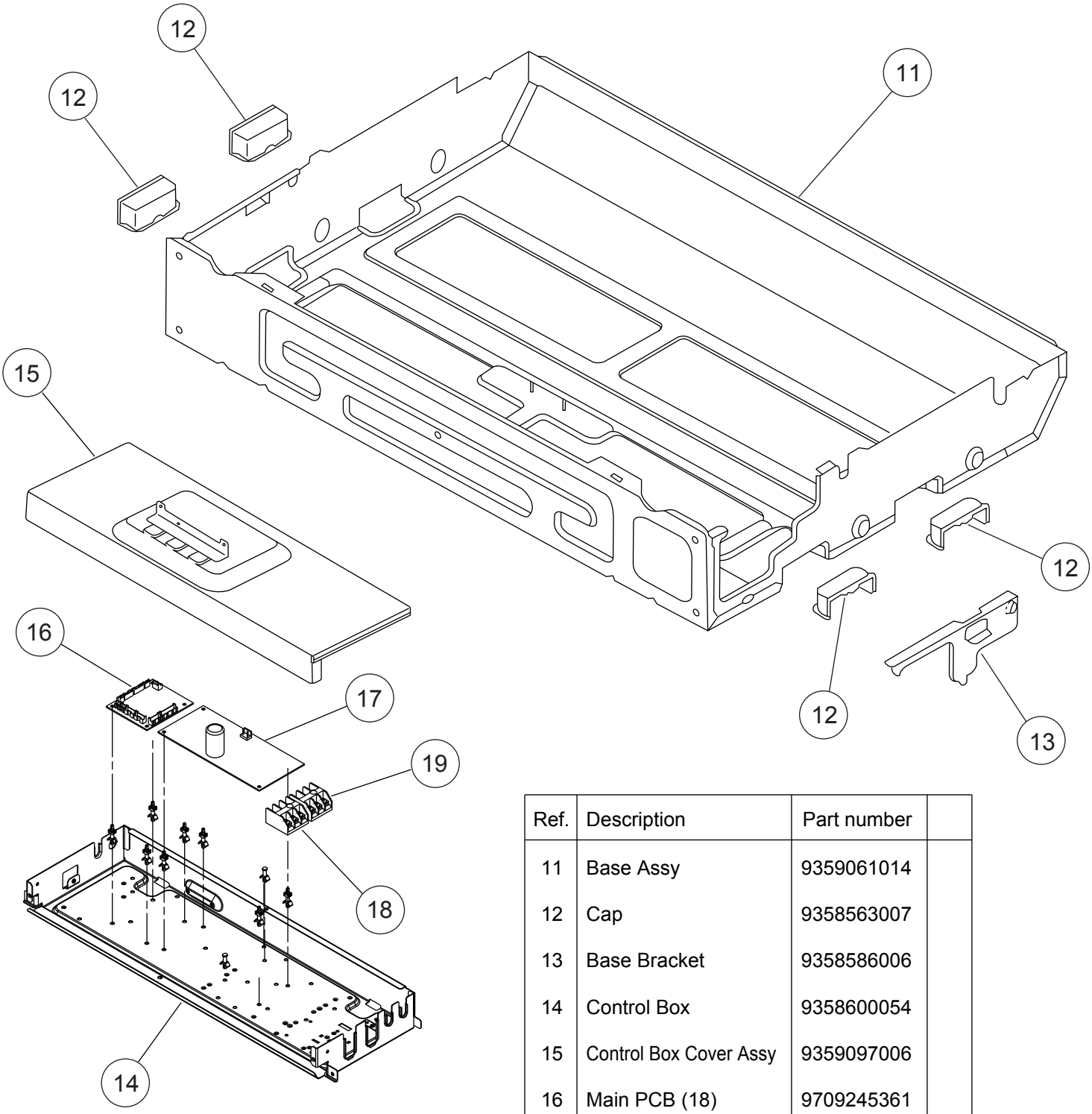

Ref.	Description	Part number	
11	Base Assy	9359061014	
12	Cap	9358563007	
13	Base Bracket	9358586006	
14	Control Box	9358600054	
15	Control Box Cover Assy	9359097006	
16	Main PCB (18)	9709245361	
16	Main PCB (22)	9709245507	
16	Main PCB (24)	9709245378	
17	Power Supply PCB	9707398274	
18	Terminal 3P	9306489045	
19	Terminal 3P	9703345012	
--	Room Thermistor	9703299087	

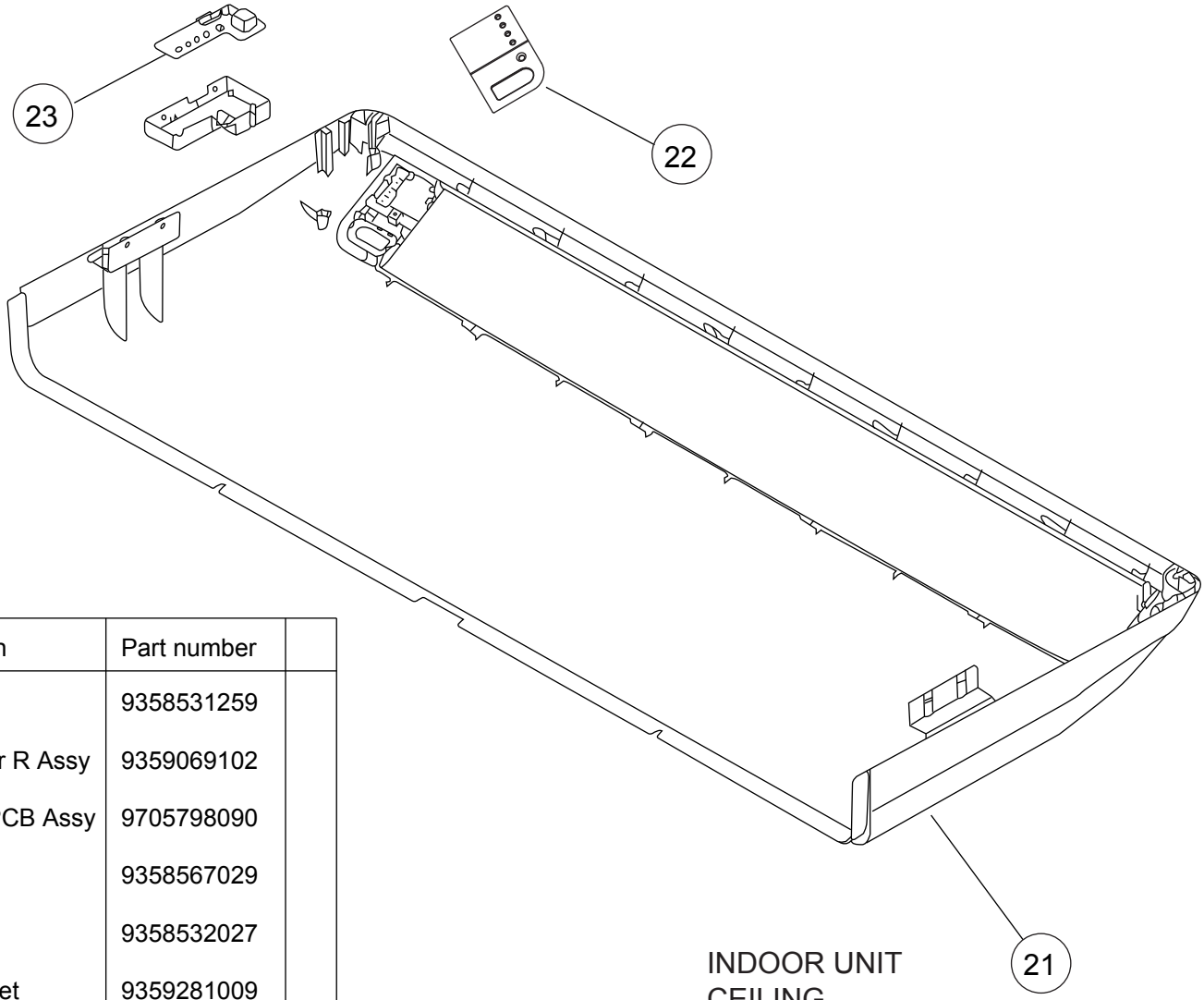

Ref.	Description	Part number	
21	Panel	9358531259	
22	Side Cover R Assy	9359069102	
23	Indicator PCB Assy	9705798090	
24	Air Filter	9358567029	
25	Grill F	9358532027	
26	Arm Bracket	9359281009	
27	Grille Support	9358602003	
28	Filter Bracket	9358607008	

INDOOR UNIT
CEILING
ABYG18LVTB
ABYG22LVTA
ABYG24LVTA

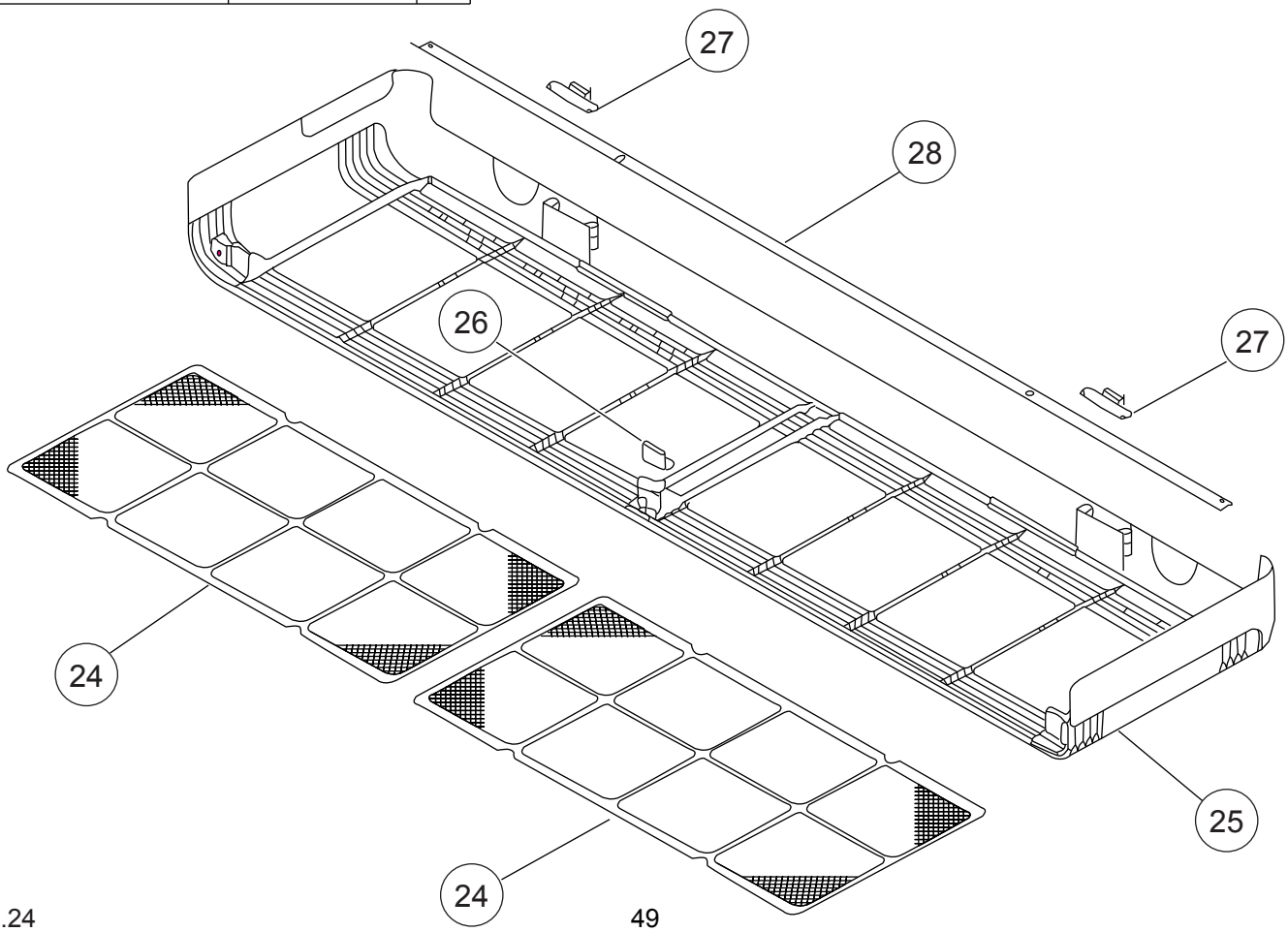

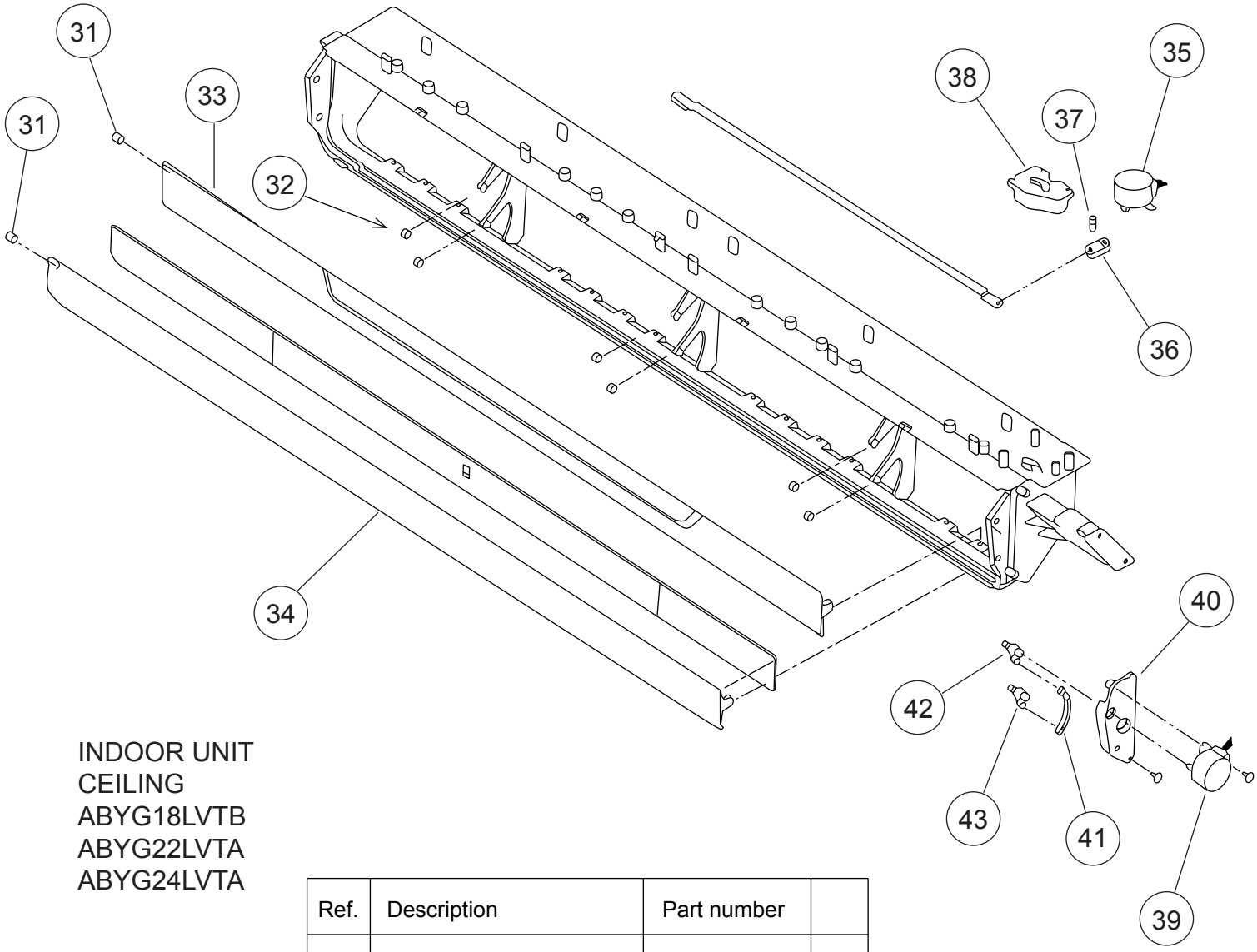

INDOOR UNIT
CEILING
ABYG18LVTB
ABYG22LVTA
ABYG24LVTA

Ref.	Description	Part number	
31	Bushing	9357942001	
32	Bushing C	9358553008	
33	Flap (Upper) F	9358538029	
34	Kit (Flap Lower)	9372671023	
35	Step Motor H	9900297015	
36	Louver Link	9358556009	
37	Louver Shaft	9358557006	
38	Louver Link Cover	9358558010	
39	Step Motor-V	9900362010	
40	Motor Base	9358562017	
41	Motor Rod-A (Step V)	9358550007	
42	Flap Link-Upper (Step V)	9358551004	
43	Flap Link-Lower (Step V)	9358552001	

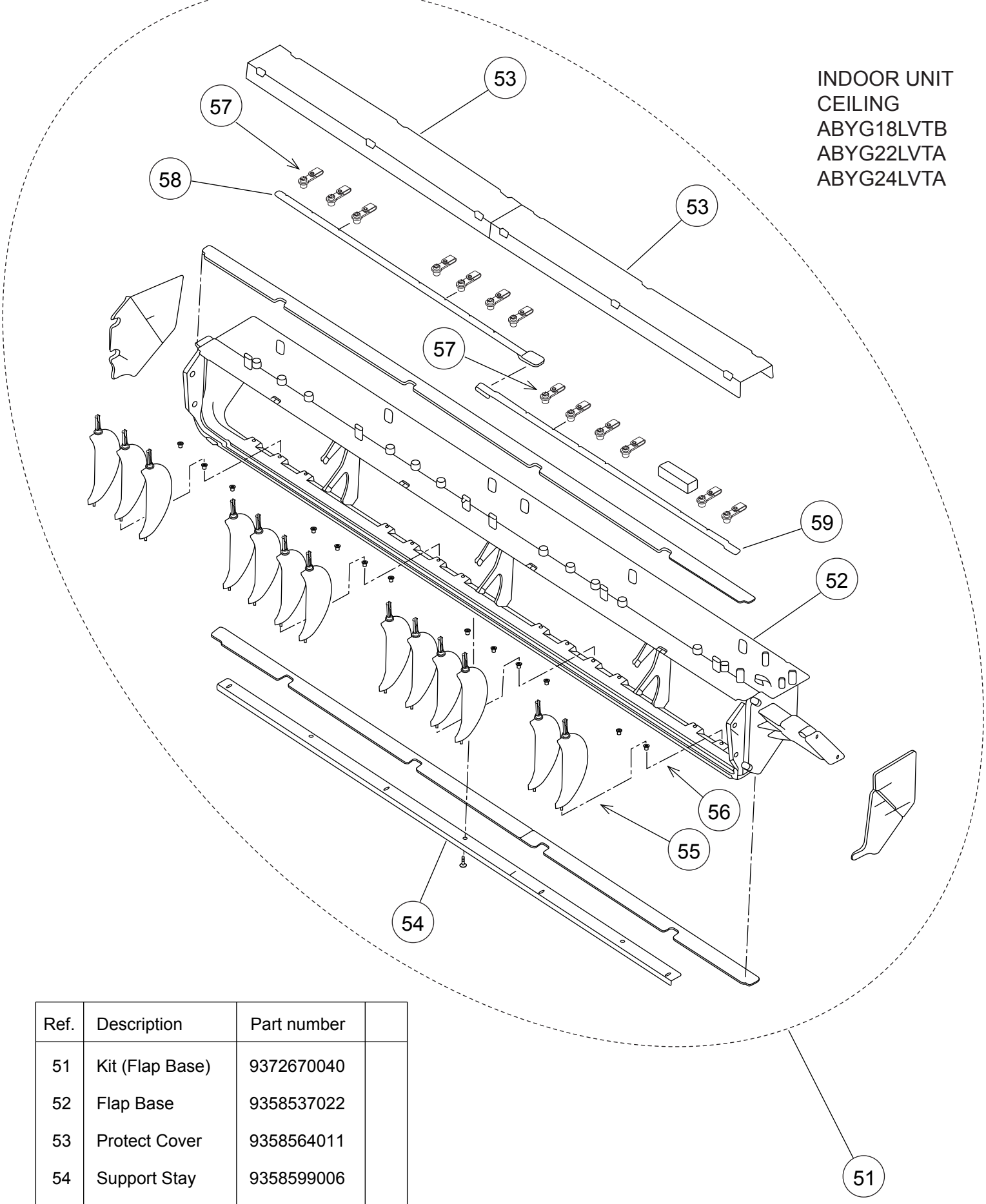

Ref.	Description	Part number	
51	Kit (Flap Base)	9372670040	
52	Flap Base	9358537022	
53	Protect Cover	9358564011	
54	Support Stay	9358599006	
55	Louver	9358561027	
56	Bushing B	9358554005	
57	Louver Stopper	9358555002	
58	Louver Rod	9358559017	
59	Motor Rod	9358560013	

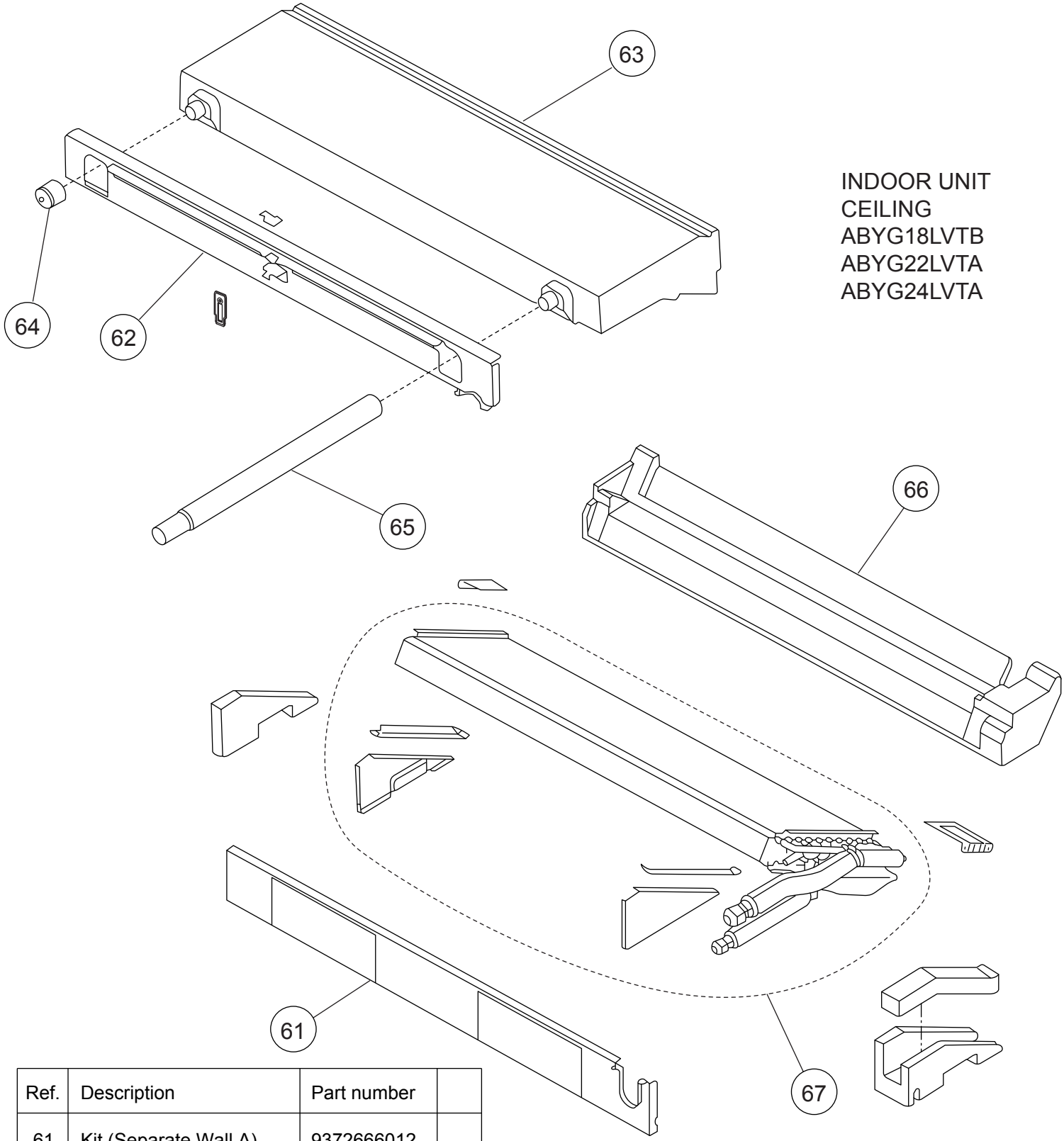

INDOOR UNIT
CEILING
ABYG18LVTB
ABYG22LVTA
ABYG24LVTA

Ref.	Description	Part number	
61	Kit (Separate Wall A)	9372666012	
62	Kit (Separate Wall B)	9373448013	
63	Kit (Drain Pan Assy)	9372669013	
64	Drain Cap	9358746004	
65	Drain Hose Assy	9377785060	
66	Kit (Insulation Flap Base)	9372672013	
67	Evaporator Sub Assy (18)	9359051275	
67	Evaporator Sub Assy (22, 24)	9359051268	
--	Pipe Thermistor	9900022020	

INDOOR UNIT
CEILING
ABYG18LVTB
ABYG22LVTA
ABYG24LVTA

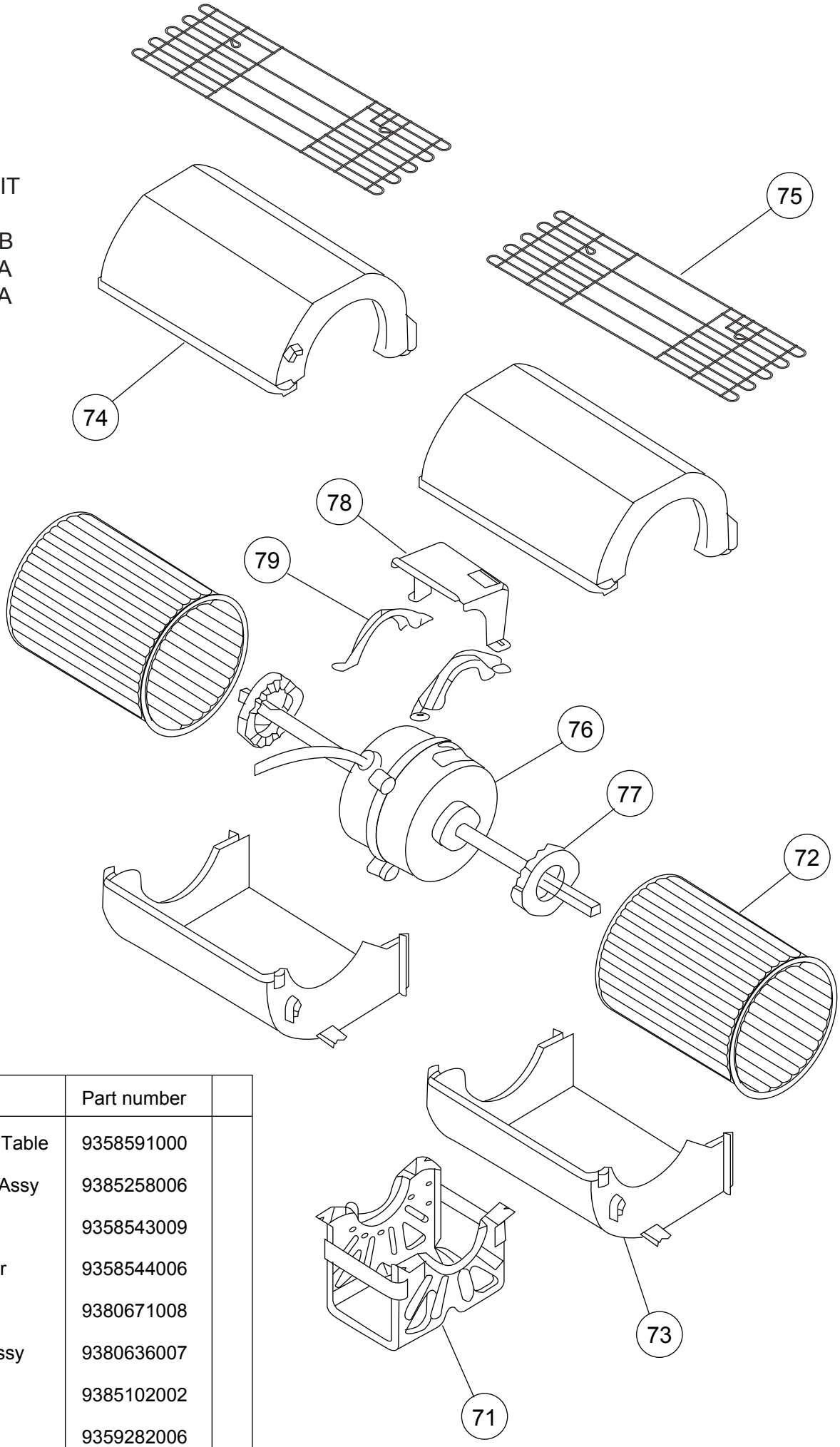

Ref.	Description	Part number	
71	Motor Fixing Table	9358591000	
72	Sirocco Fan Assy	9385258006	
73	Casing	9358543009	
74	Casing Cover	9358544006	
75	Barrier	9380671008	
76	Fan Motor Assy	9380636007	
77	Rubber	9385102002	
78	Protector	9359282006	
79	Motor Fixture	9358594001	

INDOOR UNIT
SLIM DUCT
ARYG18LLTB

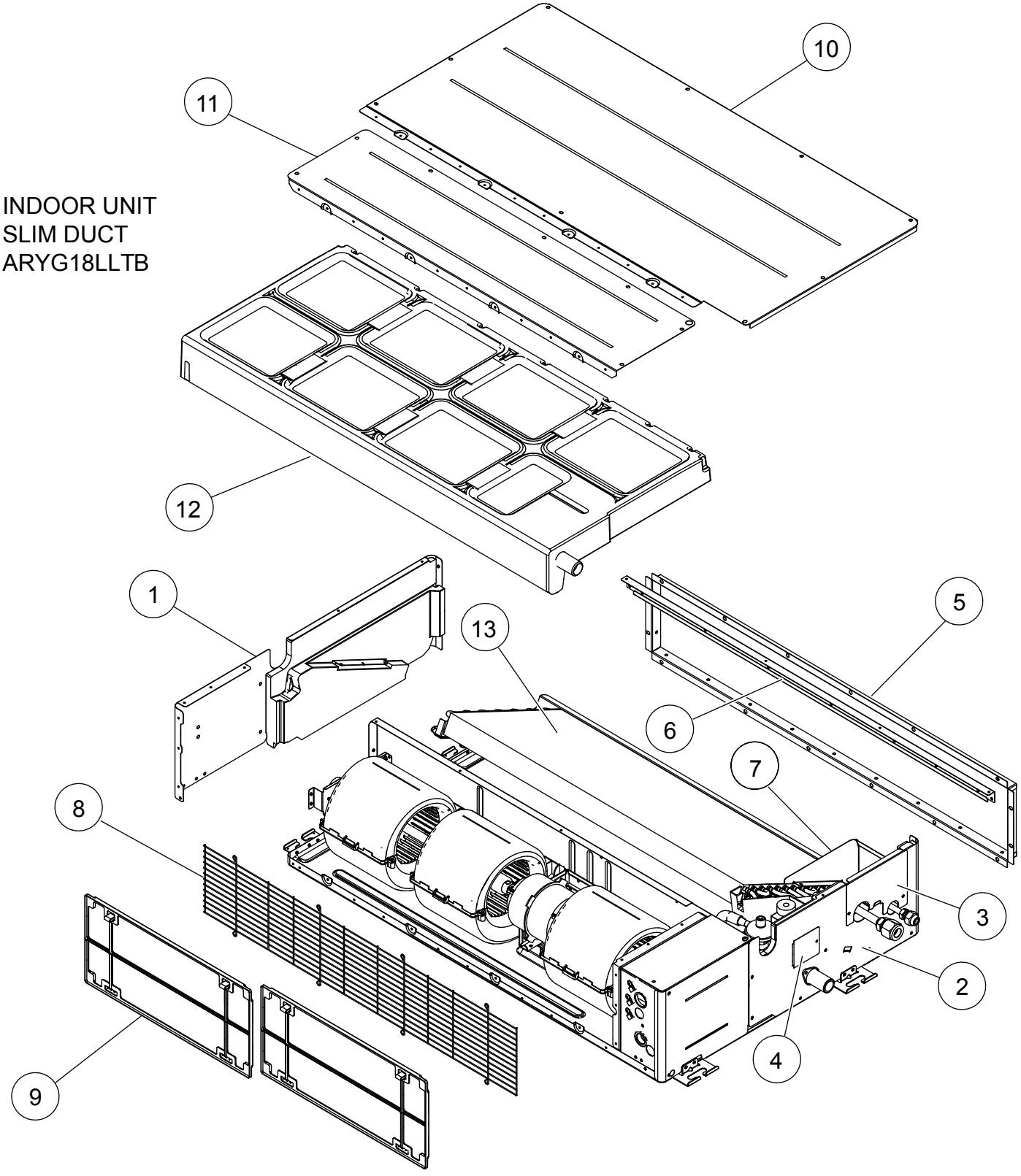

Ref	Description	Parts number	
1	Side Panel R Sub Assy	9379906012	
2	Side Panel L Sub Assy	9379907019	
3	Pipe Panel Sub Assy	9379900003	
4	Panel (Window) Sub Assy	9379915007	
5	Outlet Frame Assy	9380042013	
6	Front Panel (3 Fan)	9380595007	
7	Valve Cover Sub Assy	9379576017	

Ref	Description	Parts number	
8	Fan Guard (3 Fan)	9380590002	
9	Air Filter	9379575003	
10	Main Panel (3 Fan)	9380603009	
11	Cabinet Panel (3 Fan)	9380598008	
12	Drain Pan Sub Assy	9379901055	
13	Evaporator Total Assy	9380682066	

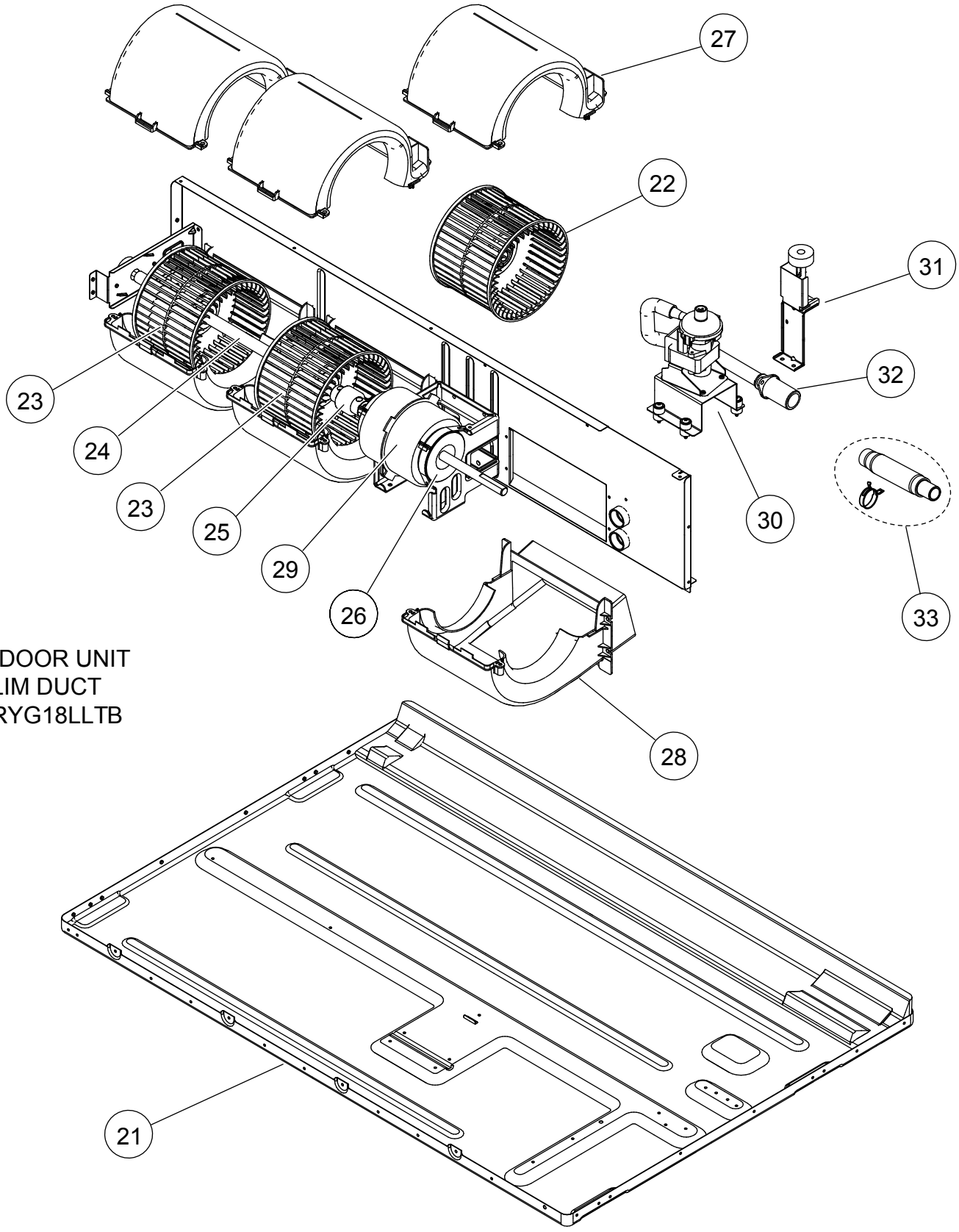

INDOOR UNIT
SLIM DUCT
ARYG18LLTB

Ref	Description	Parts number	
21	Top Panel Sub Assy	9379908047	
22	Sirroco Fan Assy	9379570022	
23	Sirroco Fan Assy	9379570039	
24	Shaft	9380398004	
25	Joint Assy	9378038011	
26	Rubber (Vibration Proof)	9379644006	
27	Casing B	9379572002	

Ref	Description	Parts number	
28	Casing U	9379571005	
29	Fan Motor Assy	9602968022	
30	Drain Pump Sub Assy	9379914024	
31	Float Switch Sub Assy	9378593022	
32	Drain Hose Assy	9379913003	
33	Hose Sub Assy	9378450097	

INDOOR UNIT
SLIM DUCT
ARYG18LLTB

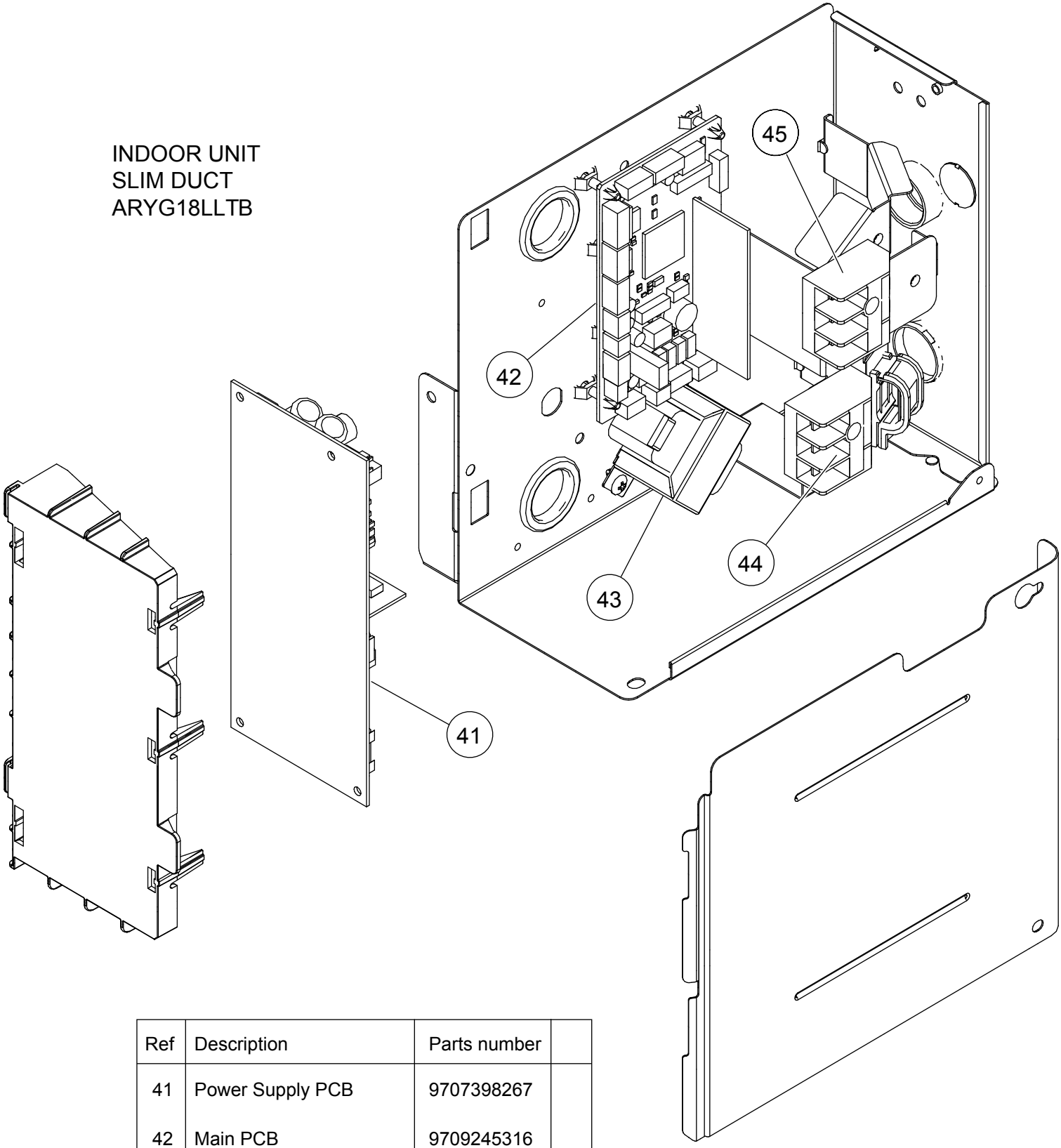

Ref	Description	Parts number	
41	Power Supply PCB	9707398267	
42	Main PCB	9709245316	
43	Reactor Assy	9707457018	
44	Terminal 3P	9306489045	
45	Terminal 3P (Wired Remote)	9703345012	
46	Wired Remote Control	9318593013	
--	Room Thermistor	9900653019	
--	Pipe Thermistor	9900498108	

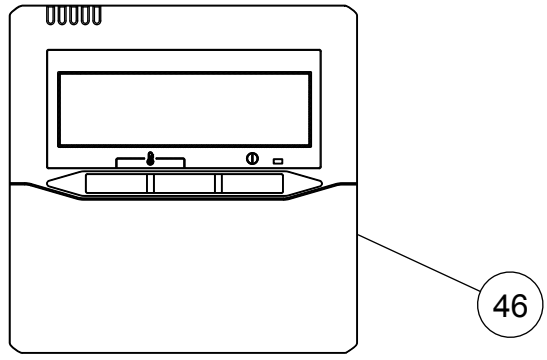

INDOOR UNIT
DUCT
ARYG22LMLA
ARYG24LMLA

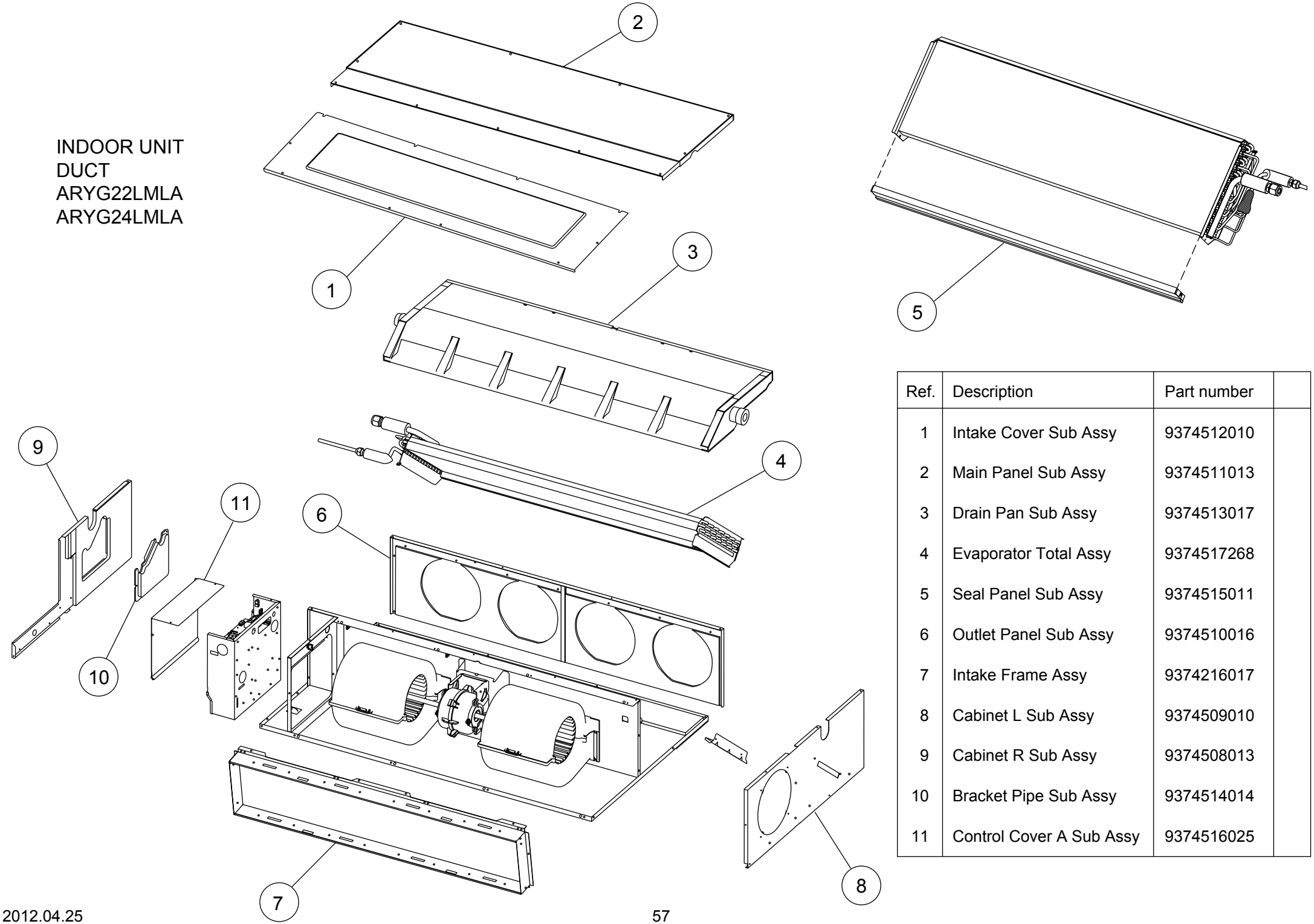

Ref.	Description	Part number	
1	Intake Cover Sub Assy	9374512010	
2	Main Panel Sub Assy	9374511013	
3	Drain Pan Sub Assy	9374513017	
4	Evaporator Total Assy	9374517268	
5	Seal Panel Sub Assy	9374515011	
6	Outlet Panel Sub Assy	9374510016	
7	Intake Frame Assy	9374216017	
8	Cabinet L Sub Assy	9374509010	
9	Cabinet R Sub Assy	9374508013	
10	Bracket Pipe Sub Assy	9374514014	
11	Control Cover A Sub Assy	9374516025	

INDOOR UNIT
DUCT
ARYG22LMLA
ARYG24LMLA

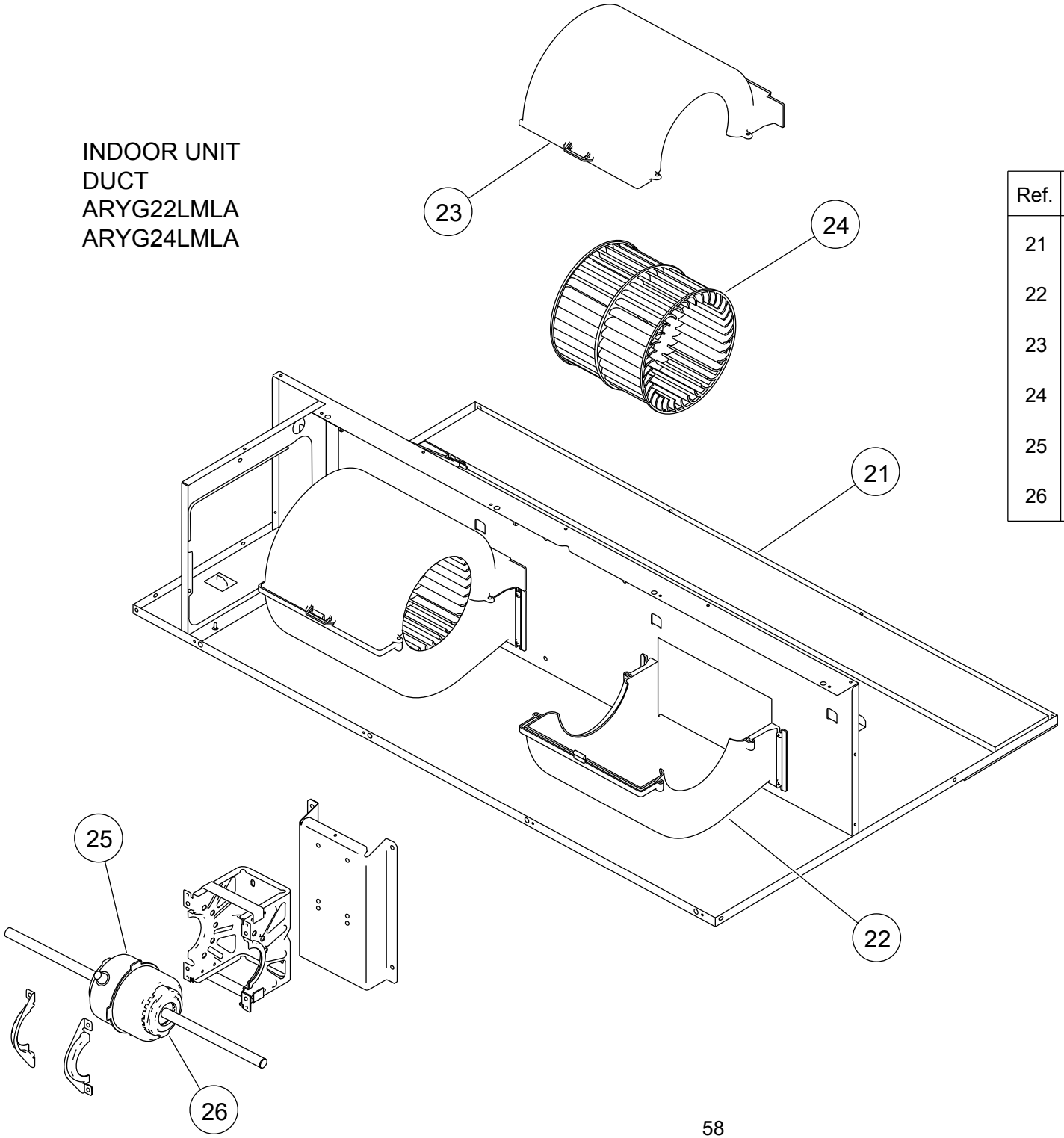

Ref.	Description	Part number	
21	Base Sub Assy	9374504015	
22	Casing A	9374233014	
23	Casing B	9374234011	
24	Sirocco Fan Assy	9356531060	
25	Fan Motor	9602433025	
26	Rubber	9385102002	

INDOOR UNIT
DUCT
ARYG22LMLA
ARYG24LMLA

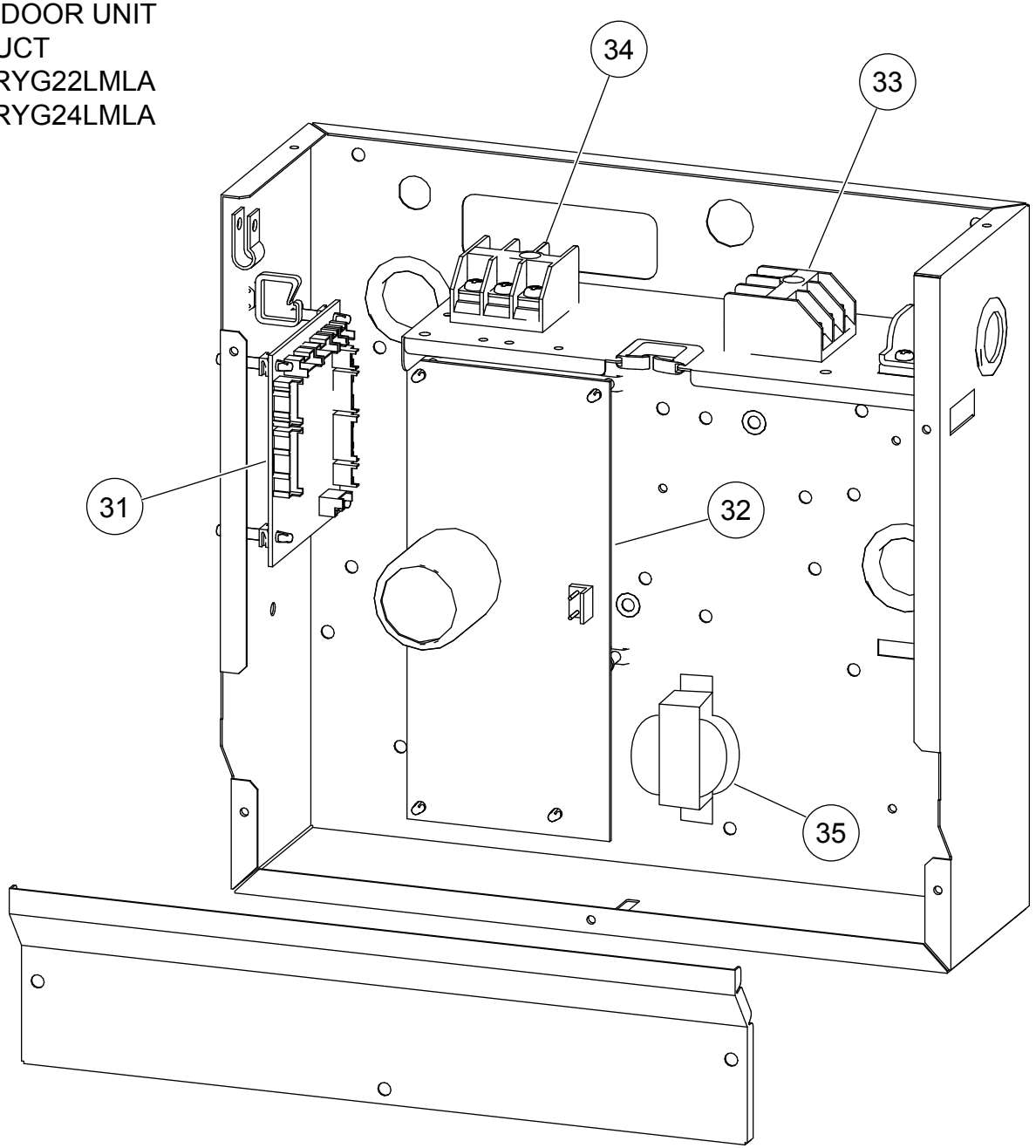

Ref.	Description	Part number	
31	Main PCB (22)	9709245491	
31	Main PCB (24)	9709245323	
32	Power Supply PCB	9707398373	
33	Terminal 3P	9703345012	
34	Terminal 3P	9306489045	
35	Reactor Assy	9707457018	
36	Remote Control	9318593013	
--	Room Thermistor	9703299025	
--	Pipe Thermistor	9703297021	

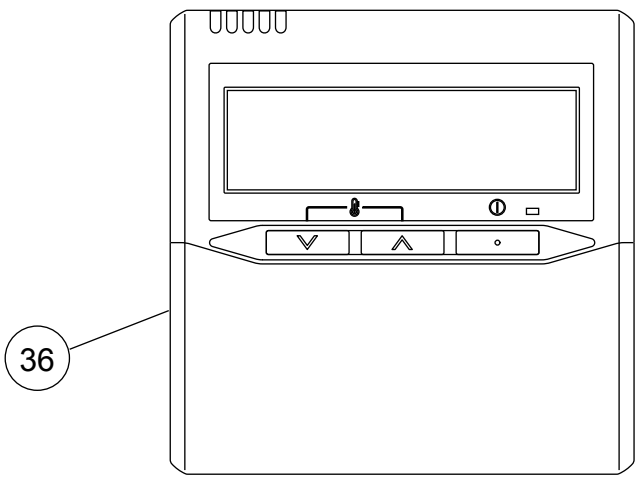

ACCESSORIES

OUTDOOR UNIT

Name and Shape	Q'ty	Use
Drain pipe 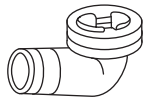	1	For drain piping work 9303029015
Drain cap	2	313166024302
One-touch bush	2	For power supply cable and connection cable installation 9378779013

INDOOR UNIT
CASSETTE
AUYG18LVLB
AUYG22LVLA
AUYG24LVLA

Name and Shape	Q'ty	Use
Coupler heat insulation (Large)	1	For indoor side pipe joint (Gas pipe)
Coupler heat insulation (Small)	1	For indoor side pipe joint (Liquid pipe)
Special nut A (Large flange)	4	For installing indoor unit
Special nut B (Small flange)	4	For installing indoor unit
Template (Carton top)	1	For cealing openings cutting Also used as packing
Drain hose	1	For installing drain pipe
Hose Band	1	For installing drain hose
Drain hose insulation	1	For installing drain pipe
Remote control	1	For air conditioner operation
Battery	2	For remote control
Remote control holder	1	For installing the remote control
Tapping screw (M3 × 12mm)	2	For mounting the remote control holder
Cable tie	2	For electrical wiring
Wire clamper	1	For electrical wiring

DECORATION PANEL
UTG-UFYD-W

Name and Shape	Q'ty	Use
Connector cover	1	For covering connector
Tapping Screw (M5 × 12 mm)	4	For mounting decoration panel
Tapping Screw (M4 × 12 mm)	1	For mounting connector cover
L angle	2	For mounting the Hook Wire to the Decoration panel
Hook wire	2	For suspending the Decoration panel
Screw [pitch small] (M4 × 10 mm)	2	For mounting the Hook Wire (for metals)
Screw [pitch large] (M4 × 10 mm)	4	For mounting the L angle and Hook wire (for resins)

INDOOR UNIT
CEILING
ABYG18LVTB
ABYG22LVTA
ABYG24LVTA

Name and Shape	Q'ty	Name and Shape	Q'ty
Cover plate (Left)	1	Cover plate (Right)	1
Screw (M4 × 10mm)	2	Installation template Positioning for under ceiling type	1
Bracket (Left) For suspending the indoor unit from ceiling	1	Bracket (Right) For suspending the indoor unit from ceiling	1
Special nut For suspending the indoor unit from ceiling	4	Wall bracket For suspending the indoor unit on the wall	2
Screw (M4 × 20mm) For fixing the wall bracket	6	Coupler heat insulator (Large) For indoor side pipe joint(Large pipe)	1
Coupler heat insulator (Small) For indoor side pipe joint (Small pipe)	1	Cable tie (Large) For fixing drain hose	1
Cable tie (Small) For electrical wiring	2	Wire clamper For electrical wiring	1
Drain hose	1	Hose band For installing drain hose	1
Insulation (Drain hose) Adhesive type 100 x 220(mm)	1	VT wire For fixing drain hose L 280mm	1
Remote control	1	Battery For remote control	2
Remote control holder	1	Screw (M3 × 12mm) For remote control holder installation	2

INDOOR UNIT
SLIM DUCT
ARYG18LLTB

Name and Shape	Q'ty	Use
Installation template	1	For positioning the indoor unit
Washer	8	For installing indoor unit
Coupler heat insulation (Large)	1	For indoor side pipe joint (Large pipe)
Coupler heat insulation (Small)	1	For indoor side pipe joint (Small pipe)
Cable tie	Medium 3	For power supply and remote control cable binding
	Large 4	For fixing the coupler heat insulation
Filter (Large)	2	
Drain hose	1	For installing drain pipe VP25 (O.D.32 I.D.26)
Hose band	1	For installing drain hose
Drain hose insulation B	1	Insulates the drain hose
Wired remote control	1	
Remote control cable	1	For connecting the remote control
Tapping screw (M4 × 16 mm)	2	For installing the remote control

INDOOR UNIT
DUCT
ARYG22LMLA
ARYG24LMLA

Name and Shape	Q'ty	Use
Hanger	4	For suspending the indoor unit from ceiling
Drain hose insulation	1	Insulates the drain hose and vinyl hose
Cable tie (Large)	1	For fixing drain hose
Cable tie (Small)	1	For remote control and remote control cable binding
Cable tie	2	For electrical wiring
Wire clamper	1	For electrical wiring
Remote control	1	For air conditioner operation
Remote control cable	1	For connecting the remote control
Screw (M4 × 16)	2	For installing the remote control
Coupler heat insulation (Large)	1	For indoor side pipe joint (gas)
Coupler heat insulation (Small)	1	For indoor side pipe joint (liquid)
Special nut A (Large flange)	4	For suspending the indoor unit from ceiling
Special nut B (Small flange)	4	For suspending the indoor unit from ceiling

1204G4057